ETSI TS 136 523-3 V11.2.0 (2014-02)

Technical Specification

LTE;
Evolved Universal Terrestrial Radio Access (E-UTRA) and Evolved Packet Core (EPC);
User Equipment (UE) conformance specification;
Part 3: Test suites
(3GPP TS 36.523-3 version 11.2.0 Release 11)

Reference

RTS/TSGR-0536523-3vb20

Keywords

LTE

ETSI

650 Route des Lucioles
F-06921 Sophia Antipolis Cedex - FRANCE

Tel.: +33 4 92 94 42 00 Fax: +33 4 93 65 47 16

Siret N° 348 623 562 00017 - NAF 742 C
Association à but non lucratif enregistrée à la
Sous-Préfecture de Grasse (06) N° 7803/88

Important notice

Individual copies of the present document can be downloaded from:
http://www.etsi.org

The present document may be made available in more than one electronic version or in print. In any case of existing or perceived difference in contents between such versions, the reference version is the Portable Document Format (PDF). In case of dispute, the reference shall be the printing on ETSI printers of the PDF version kept on a specific network drive within ETSI Secretariat.

Users of the present document should be aware that the document may be subject to revision or change of status. Information on the current status of this and other ETSI documents is available at
http://portal.etsi.org/tb/status/status.asp

If you find errors in the present document, please send your comment to one of the following services:
http://portal.etsi.org/chaircor/ETSI_support.asp

Copyright Notification

No part may be reproduced except as authorized by written permission.
The copyright and the foregoing restriction extend to reproduction in all media.

© European Telecommunications Standards Institute 2014.
All rights reserved.

DECTTM, **PLUGTESTS**TM, **UMTS**TM and the ETSI logo are Trade Marks of ETSI registered for the benefit of its Members.
3GPPTM and **LTE**™ are Trade Marks of ETSI registered for the benefit of its Members and
of the 3GPP Organizational Partners.
GSM® and the GSM logo are Trade Marks registered and owned by the GSM Association.

Intellectual Property Rights

IPRs essential or potentially essential to the present document may have been declared to ETSI. The information pertaining to these essential IPRs, if any, is publicly available for **ETSI members and non-members**, and can be found in ETSI SR 000 314: *"Intellectual Property Rights (IPRs); Essential, or potentially Essential, IPRs notified to ETSI in respect of ETSI standards"*, which is available from the ETSI Secretariat. Latest updates are available on the ETSI Web server (http://ipr.etsi.org).

Pursuant to the ETSI IPR Policy, no investigation, including IPR searches, has been carried out by ETSI. No guarantee can be given as to the existence of other IPRs not referenced in ETSI SR 000 314 (or the updates on the ETSI Web server) which are, or may be, or may become, essential to the present document.

Foreword

This Technical Specification (TS) has been produced by ETSI 3rd Generation Partnership Project (3GPP).

The present document may refer to technical specifications or reports using their 3GPP identities, UMTS identities or GSM identities. These should be interpreted as being references to the corresponding ETSI deliverables.

The cross reference between GSM, UMTS, 3GPP and ETSI identities can be found under http://webapp.etsi.org/key/queryform.asp.

Contents

Intellectual Property Rights 2
Foreword 2
Foreword 10
Introduction 10
1 Scope 11
2 References 11
3 Definitions and abbreviations 14
3.1 Definitions 14
3.2 Abbreviations 14
4 E-UTRAN/SAE system architecture and test models 14
4.1 Test system architecture 14
4.1.1 General system architecture 14
4.1.2 Component architecture 15
4.2 E-UTRAN test models 16
4.2.1 Layer 2 test models 16
4.2.1.1 MAC test model 17
4.2.1.2 RLC test model 18
4.2.1.3 PDCP test model 19
4.2.1.3.1 PDCP ROHC test model 19
4.2.1.3.2 PDCP test model (Non ROHC) 20
4.2.2 RRC test model 21
4.2.3 DRB test model 22
4.2.4 IP Test Model 23
4.2.4.1 IP user data 23
4.2.4.2 Configuration of Sockets 24
4.2.4.2.1 Socket Establishment 24
4.2.4.2.2 Socket Release 25
4.2.4.3 Handling of IP data 25
4.2.4.4 Routing of IP Data 26
4.2.4.5 Multiple PDNs 26
4.2.4.6 IP Addresses Guidelines 27
4.2.4.6.1 Common Structure of IP Addresses 27
4.2.4.6.2 Common Requirements regarding IP Addresses 27
4.2.4.6.3 Network Entities and their IP addresses 28
4.2.4.7 User Plane Signalling for Address Allocation 28
4.2.4.7.1 DHCP 29
4.2.4.7.2 DHCPv6 31
4.2.4.7.3 ICMPv6 31
4.2.4.7.4 DNS 32
4.2.4A LTE-Carrier Aggregation test Models 33
4.2.4A.1 CA-MAC test model 33
4.2.4A.2 CA-RRC test model 34
4.2.5 IP model extension for IMS 35
4.2.5.1 IPsec 36
4.2.5.1.1 Security Association 36
4.2.5.1.2 SAD and SPD 37
4.2.5.2 Signalling Compression (SigComp) 38
4.2.5.3 SIP TTCN-3 Codec 39
4.2.6 Support of DSMIPv6 39
4.2.7 MBMS test model 40
4.3 SAE Test Model 41
4.3.1 NAS Test Model 41
4.4 Inter RAT Test Model 42

4.4.1 E-UTRAN-UTRAN Inter RAT Test Model 42
4.4.1.1 User data over UTRAN 42
4.4.1.1.1 Raw user data over UTRAN 43
4.4.1.1.2 IP data over UTRAN 43
4.4.1.1.3 Routing IP data 44
4.4.2 E-UTRAN-GERAN Inter RAT Test Model 45
4.4.2.1 User data over GERAN 45
4.4.2.1.1 Raw user data over GERAN 46
4.4.2.1.2 IP data over GERAN 46
4.4.2.1.3 Routing IP data 47
4.4.3 E-UTRAN-CDMA2000 Inter RAT Test Model 48
4.4.3.1 E-UTRAN-CDMA2000 HRPD Inter RAT Test Model 48
4.4.3.2 E-UTRAN-CDMA2000 1xRTT Inter RAT test model 50
4.4.4 E-UTRAN FDD-TDD Inter RAT Test Model 53
4.4.5 E-UTRAN-UTRAN-GERAN Inter RAT Test Model 54
5 Upper Tester Interface 54
6 ASP specifications 57
6.1 General Requirements and Assumptions 57
6.1.1 IP ASP requirements 58
6.1.2 Enhancement of IP ASP for handling IMS signalling 58
6.2 E-UTRAN ASP Definitions 59
6.2.1 Configuration Primitives 59
6.2.2 Signalling Primitives 59
6.2.3 Co-ordination Messages between NAS Emulation PTC and EUTRA PTC 60
6.3 UTRAN ASP Definitions 61
6.3.1 Void 62
6.3.2 ASPs for Data Transmission and Reception 62
6.4 GERAN ASP Definitions 63
6.4.1 ASPs for Control Primitive Transmission 63
6.4.2 ASPs for Data Transmission and Reception 65
7 Test Methods and Design Considerations 68
7.1 Channel Mapping 68
7.1.1 PDCCH Candidate Selection 68
7.1.1.1 FDD candidates selection 69
7.1.1.2 TDD candidates selection 72
7.1.1.2.1 TDD candidates selection in special subframes 74
7.2 Uplink Grant 74
7.2.1 Exception TC list 76
7.3 Downlink Resource Allocation 77
7.3.1 PDCCH DCI default formats 77
7.3.1.1 Default DCI Format to be used in test cases configuring MIMO 77
7.3.2 Radio parameters configured 77
7.3.2.1 HARQ Retransmission when MIMO is configured 78
7.3.3 General DL scheduling scheme 78
7.3.3.1 Additional rules for BCCH scheduling scheme 79
7.3.3.1.1 BCCH with DCI combination 1 79
7.3.3.1.2 BCCH with DCI combination 2 79
7.3.3.2 Additional rules for PCCH specific scheduling scheme 79
7.3.3.2.1 PCCH with DCI combination 1 79
7.3.3.2.2 PCCH with DCI combination 2 80
7.3.3.3 Additional rules for RAR specific scheduling scheme 80
7.3.3.3.1 RAR with DCI combination 1 80
7.3.3.3.2 RAR with DCI combination 2 80
7.3.3.4 Additional rules for UE-dedicated scheduling scheme in normal mode 81
7.3.3.5 DL Resource allocation bitmaps 82
7.3.3.5.1 DCI combination 1 82
7.3.3.5.2 DCI combination 2 84
7.3.3.6 UE-dedicated scheduling scheme in explicit mode 86
7.3.3.6.1 DL Scheduling in Transport Block Size Selection Test Cases 87
7.3.3.7 Resource allocation sheets 87

7.4 Cell Configurations 88
7.4.1 Cell Configuration Types 88
7.4.2 Cell Power Change 89
7.4.3 E-UTRAN cell identity 89
7.4.3.1 Timing parameters of cells 89
7.4.4 Cell configurations for NAS test cases 91
7.4.5 Configuration of Multi-Cell Environment 91
7.5 TDD Considerations 92
7.5.1 FDD vs. TDD implementation 92
7.5.2 Guideline for FDD vs. TDD verification 92
7.6 Special RLC Modes 92
7.6.1 Suppression of RLC Acknowledgements 92
7.6.2 Modification of VT(S) 93
7.7 System information 93
7.7.1 System information broadcasting 93
7.7.2 Scheduling information 94
7.7.3 System information modification 97
7.7.3.1 Non-PWS System Information modification 97
7.7.3.1.1 UE in Idle_mode 97
7.7.3.1.2 UE in connected mode 97
7.7.3.2 PWS System Information modification 98
7.8 Timers and Timing Restrictions 98
7.8.1 Auxiliary timers 98
7.8.2 RRC timers reconfiguration 98
7.8.3 MAC TA timer reconfiguration 98
7.8.4 Non-protocol timers 99
7.9 Error Indication 99
7.10 Race Conditions 99
7.11 Radio Link Failure 99
7.12 Test method for RRC signalling latency 100
7.12.1 Procedure delays in PUCCH synchronized state 100
7.12.2 Procedure delays when RACH procedure required 101
7.13 RLC test method for scheduled data 102
7.14 IP packets for Loopback Mode 103
7.14.1 IP packets used for Loopback Mode A 103
7.14.2 IP packets used for Loopback Mode B 103
7.15 Connected Mode DRX 103
7.16 Handover Sequences 105
7.16.1 Sequence of inter-cell handover 105
7.16.1a Sequence of inter-cell CA handover (more than one CC before and after handover) 106
7.16.2 Sequence of intra-cell handover 107
7.16.3 UL Grants used in RA procedure during handover 107
7.17 Simulation of PDCP MAC-I Failure in UE 108
7.17.1 Integrity and ciphering not yet activated 108
7.17.2 Integrity and/or ciphering already activated 108
7.18 RRC Connection Release Sequence 108
7.19 DL CCCH Message and Contention Resolution MAC Control Element transmission in one MAC PDU or in separate MAC PDUs 109
7.20 RRC Connection Reconfiguration Sequence (Measurement Control) 109
7.21 GERAN special issues 110
7.21.1 Timeslot assigned for GERAN CS traffic 110
7.21.2 Subchannel used in GERAN L2 access message 110
7.22 EUTRAN RSRQ Calculations 110
7.22.1 Assumptions 110
7.22.2 The Ideal Calculation 110
7.22.3 Additional RSRQ Calculations For Fixing Boundary Values 110
7.23 Test method for eICIC 111
7.24 Carriage Aggregation Signalling Sequences 111
7.24.1 Initial configuration of Pcell 111
7.24.2 Initial configuration of SCell 112
7.24.3 Scell Addition and/or release 113
7.25 Test method for MBMS 113

7.25.1 Schedule transmission of MCCH messages....113
7.25.2 MCCH change notification....114
7.25.3 MTCH data scheduling....114

8 External Function Definitions....114

9 IXIT Proforma....117
9.1 E-UTRAN PIXIT....117
9.2 MultiRAT PIXIT....119

10 Postambles....121
10.1 Postambles for E-UTRA to UTRA tests....121
10.1.1 UE postamble states and procedures for E-UTRA to UTRA....122
10.1.2 Switch/Power off procedure....123
10.1.2.1 Procedure....123
10.1.3 CC disconnect procedure....125
10.1.3.1 Procedure....125
10.1.4 PS Routing Area Update procedure....126
10.1.4.1 Procedure....126
10.1.5 CS fallback procedure....127
10.1.5.1 Procedure....127
10.2 Postambles for E-UTRAN to GERAN tests....129
10.2.1 UE postamble states and procedures for E-UTRA to GERAN test cases....129
10.2.2 Switch/Power off procedure....131
10.2.2.1 Procedure....131
10.2.3 PS Handover procedure....132
10.2.3.1 Procedure....132
10.2.4 CC disconnect procedure....133
10.2.4.1 Procedure....133
10.2.5 CS fallback procedure....133
10.2.5.1 Procedure....133
10.3 Postambles for E-UTRA test cases....134
10.3.1 UE postamble states and procedures for E-UTRA test cases....134
10.3.2 Switch/Power off procedure in State E1....135
10.3.2.1 Procedure....135
10.3.3 Switch/Power off procedure in State E2 and E3....136
10.3.3.1 Procedure for E2 and E3....136
10.3.3.2 Procedure for E2_T3440....137
10.3.4 Switch/Power off procedure in State E4....138
10.3.4.1 Procedure....138
10.4 Postambles for E-UTRA to HRPD test cases....138
10.4.1 UE postamble procedures for E-UTRA to HRPD (No Pre-Registration)....138
10.4.1.1 Registration on HRPD Cell....138
10.4.1.2 Detach on HRPD Cell....139

11 Guidelines on test execution....139
11.1 EUTRA single technology....139
11.1.1 Replacement of test case execution....141
11.2 EUTRA – UTRA - GERAN....141
11.2.1 UTRA configured – GERAN not configured....141
11.2.1.1 EUTRA band overlapping UTRA band....141
11.2.1.2 EUTRA band not overlapping UTRA band....142
11.2.2 GERAN configured - UTRA not configured....143
11.2.3 Neither UTRA nor GERAN configured....144
11.2.4 Both UTRA and GERAN configured....144
11.2.4.1 EUTRA band overlapping UTRA band....144
11.2.4.2 EUTRA band not overlapping UTRA band....145
11.2.5 Replacement of test case execution....145
11.3 Guidelines for EUTRA inter-band....145
11.3.1 Primary operating band....146
11.3.2 Secondary operating band for inter-band cells....146
11.3.3 Replacement of test case execution....146
11.4 Guidelines for EUTRA CA....146

11.4.1 CA contiguous Intra-band operation 146
11.4.2 CA Inter-band operation 147

Annex A (normative): Test Suites 148

A.1 Baseline of specifications 148

A.2 E-UTRA Test Suites 148

Annex B (informative): Style Guides 161

B.1 Introduction 161

B.2 General Requirements for TTCN-3 Implementations 161

B.3 Naming Conventions 162
B.3.1 Prefixes and Restrictions for TTCN-3 Objects 162
B.3.2 Void 163
B.3.3 Void 163
B.3.4 Identifiers consisting of more than one Name 163

B.4 Implementation Issues 163
B.4.1 Control part 163
B.4.2 Top Level Test Case Definitions 163
B.4.3 Inter Component Communication 164
B.4.4 Encoding Information 164
B.4.5 Verdict Assignment 164
B.4.5.1 PASS verdict assignment 165
B.4.5.2 FAIL or INCONC verdict assignment 165
B.4.5.3 Verdict assignment in default behaviour 166
B.4.6 Default Behaviour 166
B.4.7 Templates for Sending and Receiving 167
B.4.8 Logging 167
B.4.8.1 Prose Step Numbers 167
B.4.9 Top level comments 168
B.4.10 Mapping of DRBs 168

B.5 Modularisation 168

Annex C (informative): Design Principles 170

C.1 ASP Design 170

C.2 SS State Model 171

Annex D (informative): TTCN-3 Definitions 174

D.1 EUTRA_ASP_TypeDefs 174
D.1.1 ASN1_Container 174
D.1.2 System_Configuration 180
D.1.3 Cell_Configuration 183
D.1.3.1 Cell_Configuration_Common 183
D.1.3.2 Downlink_Physical_Layer_Configuration 188
D.1.3.2.1 Antenna_Configuration 188
D.1.3.2.2 Physical_Channels 189
D.1.3.2.3 Physical_Signals 191
D.1.3.3 Uplink_Physical_Layer_Configuration 192
D.1.3.4 Common_MAC_Configuration 193
D.1.3.5 Random_Access_Procedure 200
D.1.3.6 System_Information_Control 206
D.1.3.7 Paging_Control 209
D.1.3.8 UE_Specific_Channel_Configuration 209
D.1.3.8.1 UE_Specific_Channel_Configuration_DL 209
D.1.3.8.1.1 MIMO_Configuration 209
D.1.3.8.2 UE_Specific_Channel_Configuration_UL 211
D.1.3.9 Carrier_Aggregation 213

D.1.4 Cell_Power_Attenuation 215
D.1.5 Radio_Bearer_Configuration 215
D.1.5.1 PDCP_Configuration 216
D.1.5.2 RLC_Configuration 217
D.1.5.3 MAC_Configuration 219
D.1.6 AS_Security 223
D.1.7 Semi_Persistent_Scheduling 224
D.1.8 Paging_Trigger 226
D.1.9 L1_MAC_Indication_Control 226
D.1.10 Rlc_Indication_Control 227
D.1.11 PDCP_Count 228
D.1.12 PDCP_Handover 229
D.1.13 L1_MAC_Test_Mode 229
D.1.14 PDCCH_Order 230
D.1.15 System_Indications 230
D.1.16 System_Interface 233
D.1.17 MBMS_Configuration 234

D.2 EUTRA_ASP_DrbDefs 237
D.2.1 PDU_TypeDefs 237
D.2.1.1 MAC_PDU 237
D.2.1.2 RLC_PDU 240
D.2.1.2.1 Common 240
D.2.1.2.2 TM_Data 241
D.2.1.2.3 UM_Data 241
D.2.1.2.4 AM_Data 243
D.2.1.2.5 AM_Status 244
D.2.1.3 PDCP 245
D.2.2 DRB_Primitive_Definitions 248
D.2.2.1 DRB_Common 248
D.2.2.2 Downlink 249
D.2.2.3 Uplink 250
D.2.3 MBMS_MRB_Primitive_Definitions 251
D.2.4 System_Interface 252

D.3 EUTRA_ASP_SrbDefs 253
D.3.1 SRB_DATA_ASPs 253
D.3.2 Port_Definitions 254

D.4 IP_ASP_TypeDefs 255
D.4.1 IP_Common 255
D.4.2 IP_Config 256
D.4.3 IPsec_Config 258
D.4.4 IP_SocketHandling 260
D.4.4.1 Socket_Common 260
D.4.4.2 Socket_Datagram 261
D.4.4.3 TCP_Socket 262
D.4.4.4 UDP_Socket 266
D.4.4.5 ICMP_Socket 268
D.4.4.6 Socket_Primitives 270
D.4.5 System_Interface 271

D.5 NasEmu_AspTypes 273
D.5.1 System_Interface 274

D.6 EUTRA_CommonDefs 275
D.6.1 Common_Types 275
D.6.2 Common_Constants 275
D.6.3 RRC_Nested_Types 276
D.6.4 ASP_CommonPart 276
D.6.4.1 ASP_CommonPart_Definitions 276
D.6.4.1.1 Routing_Info 276
D.6.4.1.2 Timing_Info 277
D.6.4.2 REQ_ASP_CommonPart 278

D.6.4.3 CNF_ASP_CommonPart 279
D.6.4.4 IND_ASP_CommonPart 279
D.6.5 CA_CommonDefs 280
D.6.6 MBMS_CommonDefs 281

D.7 CDMA2000_ASP_TypeDefs 281
D.7.1 CDMA2000_Common 281
D.7.1.1 CDMA2000_SystemContants 282
D.7.1.2 CDMA2000_Routing 282
D.7.1.3 CDMA2000_TimingInfo 282
D.7.1.4 CDMA2000_ReqAspCommonPart 284
D.7.1.5 CDMA2000_IndAspCommonPart 284
D.7.1.6 CDMA2000_CnfAspCommonPart 285
D.7.2 CDMA2000_PowerLevel 285
D.7.3 CDMA2000_Data 286
D.7.4 CDMA2000_CellConfiguration 288
D.7.5 CDMA2000_HRPD 290
D.7.5.1 CDMA2000_PDN_Defs 290
D.7.5.2 CDMA2000_SubProtocols 291
D.7.5.3 HRPD_Indications 293
D.7.5.4 HRPD_Commands 296
D.7.6 CDMA2000_RTT1X 299
D.7.6.1 RTT1X_Indications 299
D.7.6.2 RTT1X_Commands 302
D.7.7 System_Interface 304

D.8 CDMA2000_CommonDefs 307

D.9 HRPD_MsgTypeDefs 310

D.10 EUTRA_ASP_CDMA2000TunnellingDefs 313

D.11 EUTRA_ASP_VirtualNoiseDefs 315

D.12 UTRAN_ASP_VirtualNoiseDefs 316

D.13 CommonDefs 317

D.14 References to TTCN-3 321

Annex E (informative): Change history 322

History 374

Foreword

This Technical Specification has been produced by the 3rd Generation Partnership Project (3GPP).

The contents of the present document are subject to continuing work within the TSG and may change following formal TSG approval. Should the TSG modify the contents of the present document, it will be re-released by the TSG with an identifying change of release date and an increase in version number as follows:

Version x.y.z

where:

x the first digit:

1 presented to TSG for information;

2 presented to TSG for approval;

3 or greater indicates TSG approved document under change control.

y the second digit is incremented for all changes of substance, i.e. technical enhancements, corrections, updates, etc.

z the third digit is incremented when editorial only changes have been incorporated in the document.

Introduction

The present document is part 3 of a multi-part conformance test specification for the 3GPP evolved User Equipment (UE). The specification contains a TTCN-3 design frame work and the detailed test specifications in TTCN-3 for evolved UE at the UE-E-UTRAN radio interface.

- 3GPP TS 36.523-1 [1]: "User Equipment (UE) conformance specification; Part 1: Protocol conformance specification".
- 3GPP TS 36.523-2 [2]: "User Equipment (UE) conformance specification; Part 2: Implementation Conformance Statement (ICS) proforma specification".
- **3GPP TS 36.523-3: "Test Suites"** (the present document).

1 Scope

The present document specifies the protocol and signalling conformance testing in TTCN-3 for the 3GPP UE at the UE-E-UTRAN radio interface.

The following TTCN test specification and design considerations can be found in the present document:

- the test system architecture;
- the overall test suite structure;
- the test models and ASP definitions;
- the test methods and usage of communication ports definitions;
- the test configurations;
- the design principles and assumptions;
- TTCN styles and conventions;
- the partial PIXIT proforma;
- the test suites.

The Abstract Test Suites designed in the document are based on the test cases specified in prose (3GPP TS 36.523-1 [1]). The applicability of the individual test cases is specified in the test ICS proforma specification (3GPP TS 36.523-2 [1]).

The present document is valid for TTCN development for LTE and LTE-A UE conformance test according to 3GPP Releases starting from Release 8 up to the Release indicated on the cover page of the present document.

2 References

The following documents contain provisions which, through reference in this text, constitute provisions of the present document.

- References are either specific (identified by date of publication, edition number, version number, etc.) or non-specific.
- For a specific reference, subsequent revisions do not apply.
- For a non-specific reference, the latest version applies. In the case of a reference to a 3GPP document (including a GSM document), a non-specific reference implicitly refers to the latest version of that document *in the same Release as the present document*.

[1] 3GPP TS 36.523-1: "User Equipment (UE) conformance specification; Part 1: Protocol conformance specification".

[2] 3GPP TS 36.523-2: "User Equipment (UE) conformance specification; Part 2: Implementation Conformance Statement (ICS) proforma specification".

[3] 3GPP TS 36.508: "Common test environments for User Equipment (UE) conformance testing".

[4] 3GPP TS 36.509: "Terminal logical test interface; Special conformance testing functions".

[5] 3GPP TS 34.123-1: "User Equipment (UE) conformance specification; Part 1: Protocol conformance specification".

[6] 3GPP TS 34.123-2: "User Equipment (UE) conformance specification; Part 2: Implementation Conformance Statement (ICS) proforma specification".

[7] 3GPP TS 34.123-3: "User Equipment (UE) conformance specification; Part 3: Abstract Test Suite (ATS)".

[8] 3GPP TS 34.108: "Common test environments for User Equipment (UE) conformance testing".

[9] 3GPP TS 34.109: "Terminal logical test interface; Special conformance testing functions".

[10] 3GPP TS 51.010-1: "Mobile Station (MS) conformance specification; Part 1: Conformance Specification".

[11] 3GPP TS 51.010-2: "Mobile Station (MS) conformance specification; Part 2: Protocol Implementation Conformance Statement (PICS) proforma specification".

[12] 3GPP TS 51.010-5: "Mobile Station (MS) conformance specification; Part 5: Inter-RAT (GERAN to UTRAN) Abstract Test Suite (ATS)".

[13] ETSI ES 201 873-1: "Methods for Testing and Specification (MTS); The Tree and Tabular Combined Notation version 3; Part 1: TTCN-3 Core Language".

[14] 3GPP TS 36.304: "Evolved Universal Terrestrial Radio Access (E-UTRA); "UE Procedures in Idle Mode".

[15] 3GPP TS 36.306 "Evolved Universal Terrestrial Radio Access (E-UTRA); "UE Radio Access Capabilities".

[16] 3GPP TS 36.321: "Evolved Universal Terrestrial Radio Access (E-UTRA); "Medium Access Control (MAC) protocol specification".

[17] 3GPP TS 36.322:"Evolved Universal Terrestrial Radio Access (E-UTRA); "Radio Link Control (RLC) protocol specification".

[18] 3GPP TS 36.323: "Evolved Universal Terrestrial Radio Access (E-UTRA); "Packet Data Convergence Protocol (PDCP) Specification".

[19] 3GPP TS 36.331: "Evolved Universal Terrestrial Radio Access (E-UTRA) Radio Resource Control (RRC); Protocol Specification".

[20] 3GPP TS 24.008: "Mobile Radio Interface Layer 3 specification; Core Network Protocols; Stage 3".

[21] 3GPP TS 24.301: "Non-Access-Stratum (NAS) Protocol for Evolved Packet System (EPS); Stage 3".

[22] 3GPP TS 24.303: "Mobility Management based on DSMIPv6; User Equipment (UE) to network protocols; Stage 3".

[23] 3GPP TS 24.304: "Mobility management based on Mobile IPv4; User Equipment (UE) – foreign agent interface; Stage 3".

[24] 3GPP TS 33.401: "3GPP System Architecture Evolution (SAE); Security architecture".

[25] 3GPP TS 33.402: "3GPP System Architecture Evolution (SAE); Security aspects of non-3GPP accesses".

[26] 3GPP TR 21.905: "Vocabulary for 3GPP Specifications".

[27] ETSI ES 201 873-4: "Methods for Testing and Specification (MTS); The Testing and Test Control Notation version 3; Part 4: TTCN-3 Operational Semantics".

[28] ETSI ES 201 873-5: "Methods for Testing and Specification (MTS); The Testing and Test Control Notation version 3; Part 5: TTCN-3 Runtime Interface (TRI)".

[29] ETSI ES 201 873-6: "Methods for Testing and Specification (MTS); The Testing and Test Control Notation version 3; Part 6: TTCN-3 Control Interface (TCI)".

[30] 3GPP TS 36.213: "Evolved Universal Terrestrial Radio Access (E-UTRA); Physical layer procedures".

[31] 3GPP TS 27.005: "Use of Data Terminal Equipment – Data Circuit terminating Equipment (DTE-DCE) interface for Short Message Service (SMS) and Cell Broadcast Service (CBS)".

[32] 3GPP TS 27.007: "AT command set for 3G User Equipment (UE)".

[33] 3GPP TS 27.060: "Packet domain; Mobile Station (MS) supporting Packet Switched services".

[34] 3GPP TS 36.101: "Evolved Universal Terrestrial Radio Access (E-UTRA); User Equipment (UE) radio transmission and reception".

[35] 3GPP TS 36.211: "Evolved Universal Terrestrial Radio Access (E-UTRA); Physical channels and modulation".

[36] 3GPP TS 25.331: "RRC Protocol Specification".

[37] 3GPP TS 36.133: "Evolved Universal Terrestrial Radio Access (E-UTRA); Requirements for support of radio resource management".

[38] 3GPP2 TSG-C C.S0024_C v2.0: "cdma2000 High Rate Packet Data Air Interface Specification".

[39] 3GPP2 TSG-C C.S0057-E v1.0: "Band Class Specification for cdma2000 Spread Spectrum Systems".

[40] 3GPP TS 34.229-1: "Internet Protocol (IP) multimedia call control protocol based on Session Initiation Protocol (SIP) and Session Description Protocol (SDP); User Equipment (UE) conformance specification; Part 1: Protocol conformance specification".

[41] 3GPP TS 33.203: "3G security; Access security for IP-based services".

[42] 3GPP TS 24.229: "IP Multimedia Call Control Protocol based on Session Initiation Protocol (SIP) and Session Description Protocol (SDP); Stage 3".

[43] IETF RFC 3320: "Signalling Compression (SigComp)".

[44] IETF RFC 3485: "The Session Initiation Protocol (SIP) and Session Description Protocol (SDP) Static Dictionary for Signalling Compression (SigComp)".

[45] IETF RFC 3486: "Compressing the Session Initiation Protocol (SIP)".

[46] IETF RFC 4896: "Signalling Compression (SigComp) Corrections and Clarifications".

[47] IETF RFC 5049: "Applying Signalling Compression (SigComp) to the Session Initiation Protocol (SIP)".

[48] 3GPP TS 23.003: "Numbering, addressing and identification".

[49] 3GPP TS 23.060: "General Packet Radio Service (GPRS) Service description; Stage 2".

[50] 3GPP TS 29.061: "Interworking between the Public Land Mobile Network (PLMN) supporting packet based services and Packet Data Networks (PDN)".

[51] 3GPP TS 34.229-3: "Internet Protocol (IP) multimedia call control protocol based on Session Initiation Protocol (SIP) and Session Description Protocol (SDP); User Equipment (UE) conformance specification; Part 3: Abstract Test Suite ".

[52] 3GPP TS 37.571-4: “User Equipment (UE) conformance specification for UE positioning; Part 4: Test Suites”

[53] 3GPP TS 36.214: " Evolved Universal Terrestrial Radio Access (E-UTRA);Physical layer; Measurements".

[54] IETF RFC 1144: "Compressing TCP/IP headers for low-speed serial links".

[55] IETF RFC 2507: "IP Header Compression".

[56] ITU-T Recommendation V.42bis: "Data compression procedures for data circuit-terminating equipment (DCE) using error correction procedures".

[57]	ITU-T Recommendation V.44: "Data compression procedures".

3 Definitions and abbreviations

3.1 Definitions

For the purposes of the present document, the terms and definitions given in TR 21.905 [26] apply.

3.2 Abbreviations

For the purposes of the present document, the abbreviations given in TR 21.905 [26] apply.

4 E-UTRAN/SAE system architecture and test models

4.1 Test system architecture

4.1.1 General system architecture

The general system architecture is shown in figure 4.1.1-1.

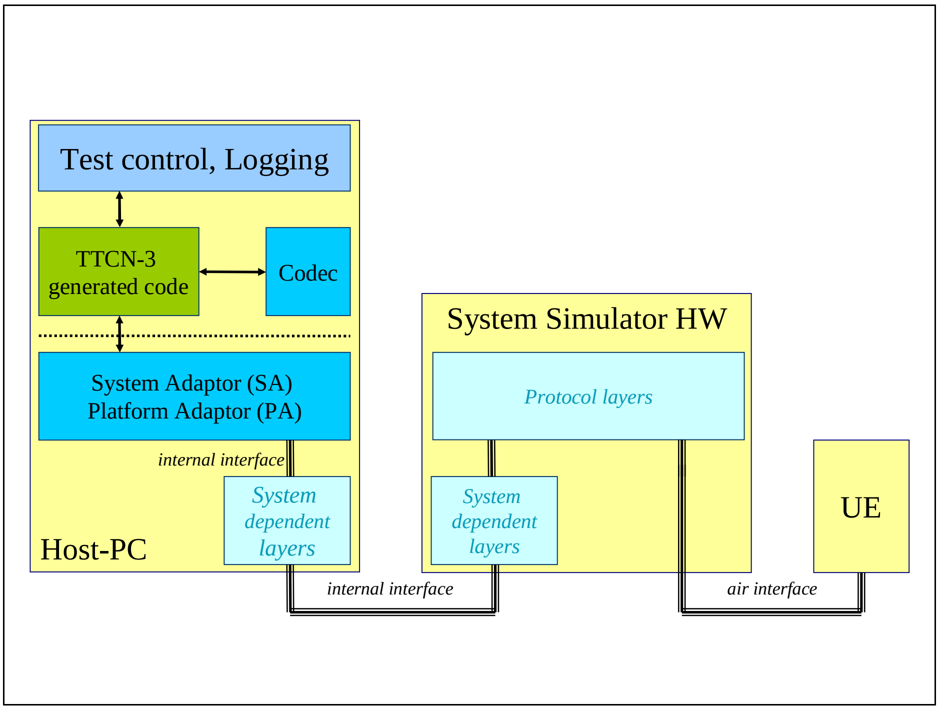
Test control, Logging
TTCN-3 generated code
Codec
System Adaptor (SA)
Platform Adaptor (PA)
internal interface
System dependent layers
Host-PC
System Simulator HW
Protocol layers
System dependent layers
UE
internal interface
air interface

Figure 4.1.1-1: Architecture of system simulator

The scope of the present document is the TTCN-3 implementation of conformance tests. Specifications and definitions of the present document affect the codec and the system adaptor (SA). Test control and logging are out of scope as well as the interface between the TTCN-3 generated code and the system adaptor which can be either standardised TRI or proprietary.

The main assumptions regarding the system architecture are:

- TTCN-3 code runs on the host system only:
    - No TTCN-3 components are downloaded to system simulator HW.
    - Layer 2 tests (MAC, RLC) are controlled by appropriate configuration primitives in TTCN-3 but neither layer 2 nor parts of it are implemented in TTCN-3; the system simulator performs low layer procedure autonomously but all system simulator implementations shall result in the same test pattern at the air interface.
- Proprietary interfaces e.g. instead of the TRI are not considered in the test model.
- The timing considerations of the conformance tests shall be supported by appropriate timing information (e.g. system frame number) provided from/to the system simulator rather than by timing measurements in TTCN-3.

4.1.2 Component architecture

For E-UTRAN conformance tests each access technology (RAT) is hosted by a separate TTCN-3 parallel component (PTC):

- E-UTRAN.
- UTRAN.
- GERAN.
- Other technologies like 3GPP2 UTRAN.

The PTCs are controlled by the TTCN-3 master test component (MTC) which:

- is independent from the RAT;
- may host the upper tester for MMI and AT commands;
- creates, synchronises and terminates the PTCs;
- starts and terminates test cases.

Figure 4.1.2-1 shows this component architecture for a E-UTRAN and UTRAN scenario.

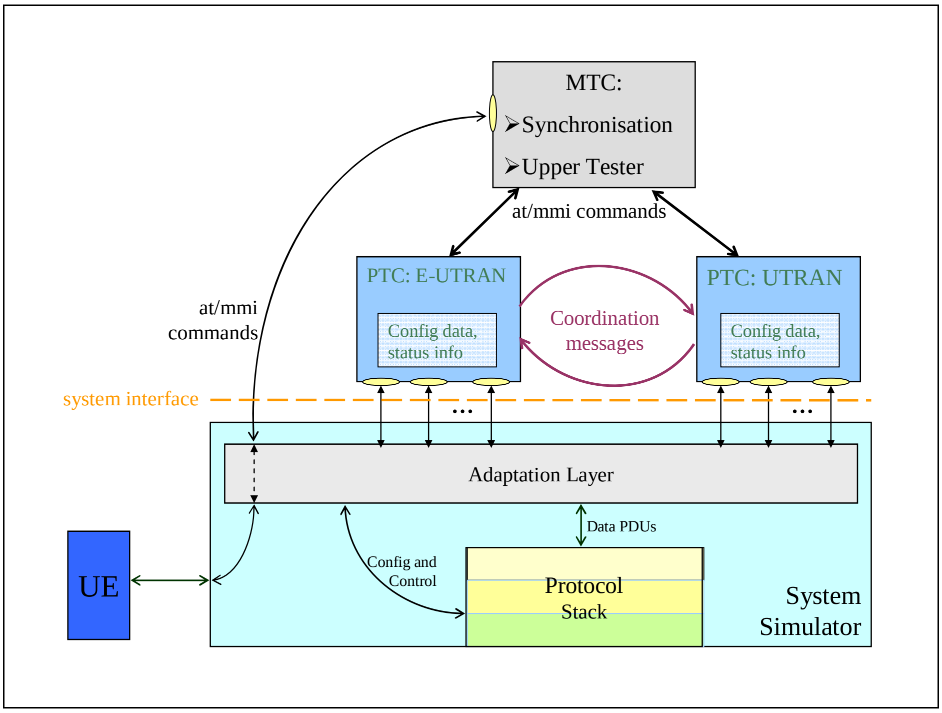
MTC:
➢Synchronisation
➢Upper Tester
at/mmi commands
at/mmi
commands
PTC: E-UTRAN
Config data,
status info
Coordination
messages
PTC: UTRAN
Config data,
status info
system interface
...
...
Adaptation Layer
Data PDUs
Config and
Control
Protocol
Stack
UE
System
Simulator

Figure 4.1.2-1:E-UTRAN-UTRAN component model

According to this model there are different interfaces to be considered:

MTC - PTC:

- common synchronisation of PTCs;
- upper tester primitives.

MTC - System Interface:

- upper tester primitives.

PTC - PTC:

- primitives containing information for IRAT handover.

PTC - System Interface:

- primitives containing peer-to-peer message;
- configuration primitives.

4.2 E-UTRAN test models

4.2.1 Layer 2 test models

When test loop mode is used for the Layer 2 tests the DRB ports at the SS side is referred to the raw DRB ones. At the SS side, DRBs are initially configured with default modes and parameters. For the purpose of L2-testing the DRBs may be reconfigured later on as indicated in the subsequent test models (see below).

4.2.1.1 MAC test model

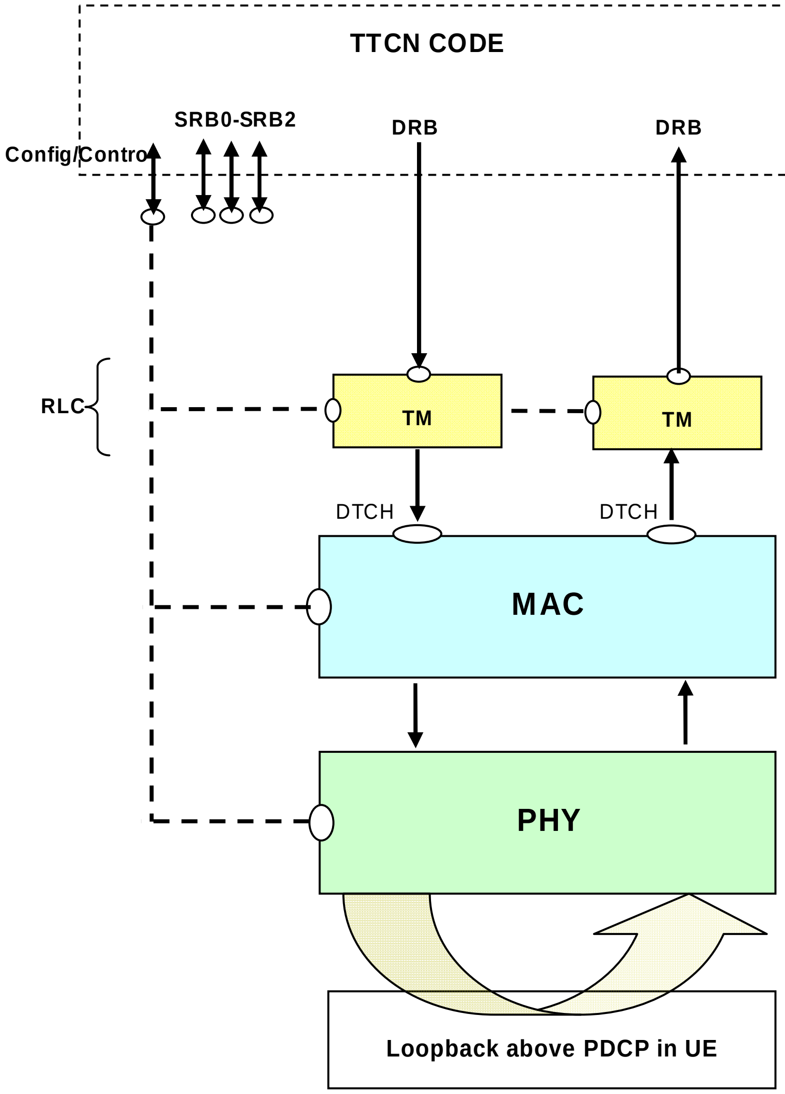

Figure 4.2.1.1-1: Test model for MAC testing

The UE is configured in Test Loop Mode, to loop back the user domain data above PDCP layer. On UE side Ciphering is enabled (since Mandatory) but with dummy ciphering algorithm, which is equivalent to not using ciphering. ROHC is not configured on UE Side.

On the SS Side, Layer 1 is configured in the normal way. MAC is configured in a special mode, where it does not add any MAC headers in DL and /or not remove any MAC headers in UL directions respectively at DRB port. In this case, the TTCN shall provide the final PDU, including padding. Except for this, the MAC layer shall perform all of its other functions.

On DRBs the RLC is configured in transparent mode. Hence with this configuration PDU's out of SS RLC are same as the SDU's in it. There is no PDCP configured on SS Side. The ports are directly above RLC.

There are two different test modes in which MAC header addition/removal can be configured:

DL/UL header-transparent mode: no header addition in DL and no header removal in UL.

DL only header-transparent mode: no header addition in DL; UL MAC is configured in normal mode to remove MAC header and dispatch the MAC SDUs according to the logical channel Ids.

If SS MAC is configured in DL/UL header-transparent mode, the PDU's exchanged at the DRB port between TTCN and SS, shall be the final MAC PDU's consisting of MAC, RLC and PDCP headers. TTCN code shall take care in DL of building MAC header, RLC headers and PDCP headers and in UL handle MAC, RLC and PDCP headers. TTCN code shall take care of maintaining sequence numbers and state variables for RLC and PDCP layers. During testing of multiple DRBs at the UE side, it shall still be possible to configure only one DRB on SS side with configuration in the figure 4.2.1.1-1. Other DRBs will not be configured, to facilitate routing UL TBSs. Multiplexing/de-multiplexing of PDUs meant/from different DRBs shall be performed in TTCN. Since the MAC layer does not evaluate the MAC headers in UL it cannot distinguish between SRB and DRB data in UL. Therefore there shall be no SRB traffic while MAC is configured in this test mode.

If SS MAC is configured in DL only header-transparent mode, the UL PDUs exchanged at the DRB port between TTCN and SS, shall be final RLC PDUs consisting of RLC and PDCP headers. SS shall route these PDUs based on logical channel IDs. In DL, TTCN sends fully encoded MAC PDUs at the DRB port (consisting of MAC, RLC and PDCP headers). In this case TTCN needs to take care of maintaining sequence numbers and state variables for RLC and PDCP layers. Furthermore in UL and DL the SS MAC layer shall be capable of dealing with SRB data (i.e. it shall handle DL RLC PDUs coming from SRBs RLC layer or dispatch UL RLC PDUs to SRBs) as in normal mode.

NOTE: TTCN shall ensure that no DL MAC SDUs in normal mode and DL MAC PDUs in test mode are mixed for the same TTI.

The UL Scheduling Grant and DL Scheduling assignments are configured from TTCN over system control port. SS reports PUCCH scheduling information reception over system indication port, if configured. In a similar way the reception of RACH preambles is reported by SS over the same port.

4.2.1.2 RLC test model

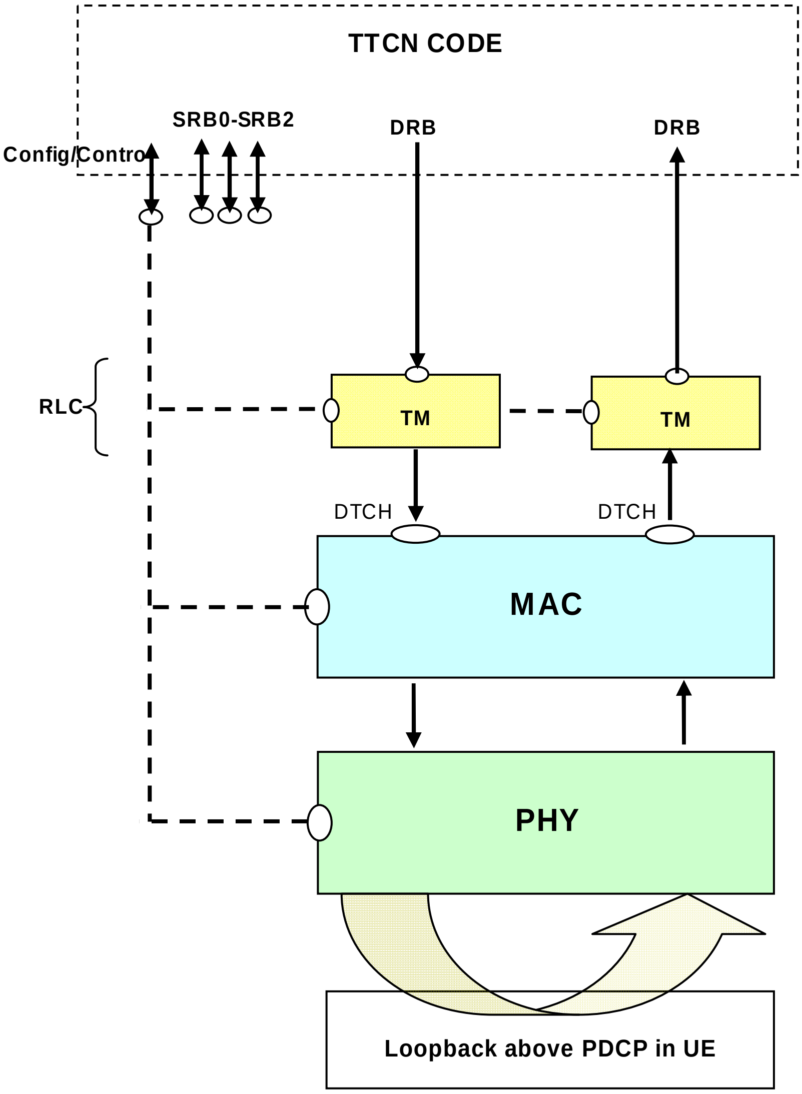

Figure 4.2.1.2.3-1: Test model for RLC AM/UM testing

This model is suitable for testing both UM/AM mode of operation of DRBs on UE side.

The UE is configured in Test Loop Mode, to loop back the user domain data above PDCP layer. On UE side Ciphering is enabled (since mandatory) but with dummy ciphering algorithm, which is equivalent to not using ciphering. ROHC is not configured on UE Side.

On the SS Side, L1 and MAC are configured in the normal way. The RLC is configured in transparent mode. Hence with this configuration PDUs out of SS RLC are same as the SDUs in it. There is no PDCP configured on SS Side. The ports are directly above RLC.

The PDUs exchanged between TTCN and SS, shall be the final RLC PDUs consisting of RLC and PDCP headers. TTCN code shall take care in DL of building RLC headers and PDCP headers and in UL handle RLC and PDCP headers. TTCN code shall take care of maintaining sequence numbers and state variables for RLC and PDCP layers. If RLC on UE side is in AM mode, TTCN shall take care of generating polls in DL and responding with RLC control PDUs on reception of UL Poll.

The UL Scheduling Grant and DL Scheduling assignments are configured from TTCN over system control port.

4.2.1.3 PDCP test model

4.2.1.3.1 PDCP ROHC test model

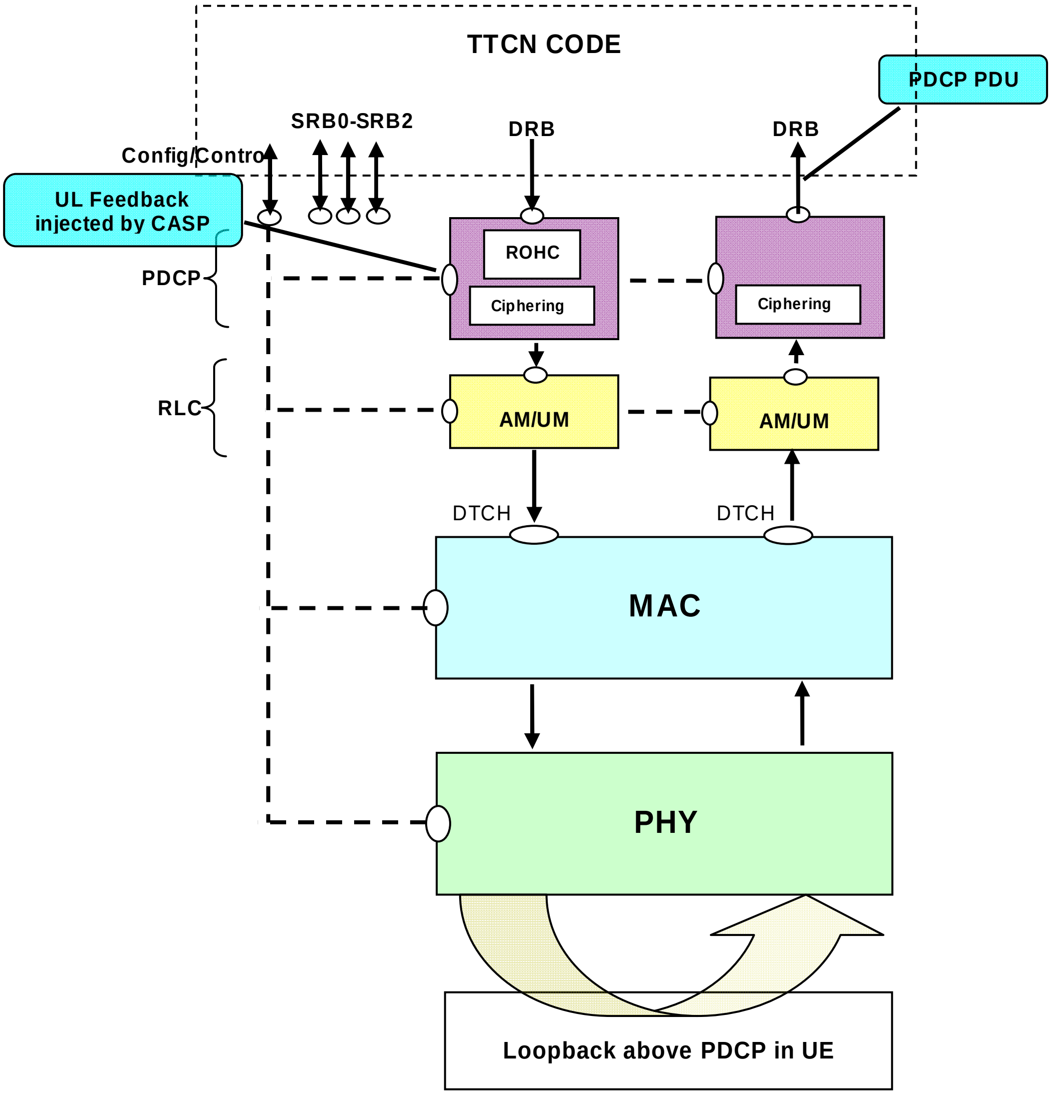
TTCN CODE
PDCP PDU
SRB0-SRB2
DRB
DRB
Config/Control
UL Feedback injected by CASP
PDCP
ROHC
Ciphering
Ciphering
RLC
AM/UM
AM/UM
DTCH
DTCH
MAC
PHY
Loopback above PDCP in UE

Figure 4.2.1.3.1-1: Test model for PDCP ROHC testing

The UE is configured in Test Loop Mode, to loop back the user domain data above PDCP layer. On UE side Ciphering is enabled and ROHC is configured.

On the SS Side L1, MAC and RLC are configured in normal way. They shall perform all of their functions. The ports are above PDCP.

The PDCP is configured in special mode, with no header manipulation. Ciphering is configured in both directions. ROHC is configured in DL direction only. UL ROHC feedback can be injected by control ASP. It shall be possible to configure 'no header manipulation' mode independently in UL and DL directions. When configured in special mode, SS shall not add PDCP header (DL) and remove PDCP Header (UL). PDCP state variables shall be maintained by SS PDCP layer. It shall be possible for SS PDCP to update state variables based on the PDU's in both directions, even though headers are not added/removed. Also, it shall be possible to read or set the PDCP internal state variables, by control primitives.

The UL Scheduling Grant and DL Scheduling assignments are configured from TTCN over system control port. SS reports PUCCH scheduling information reception over system indication port, if configured.

4.2.1.3.2 PDCP test model (Non ROHC)

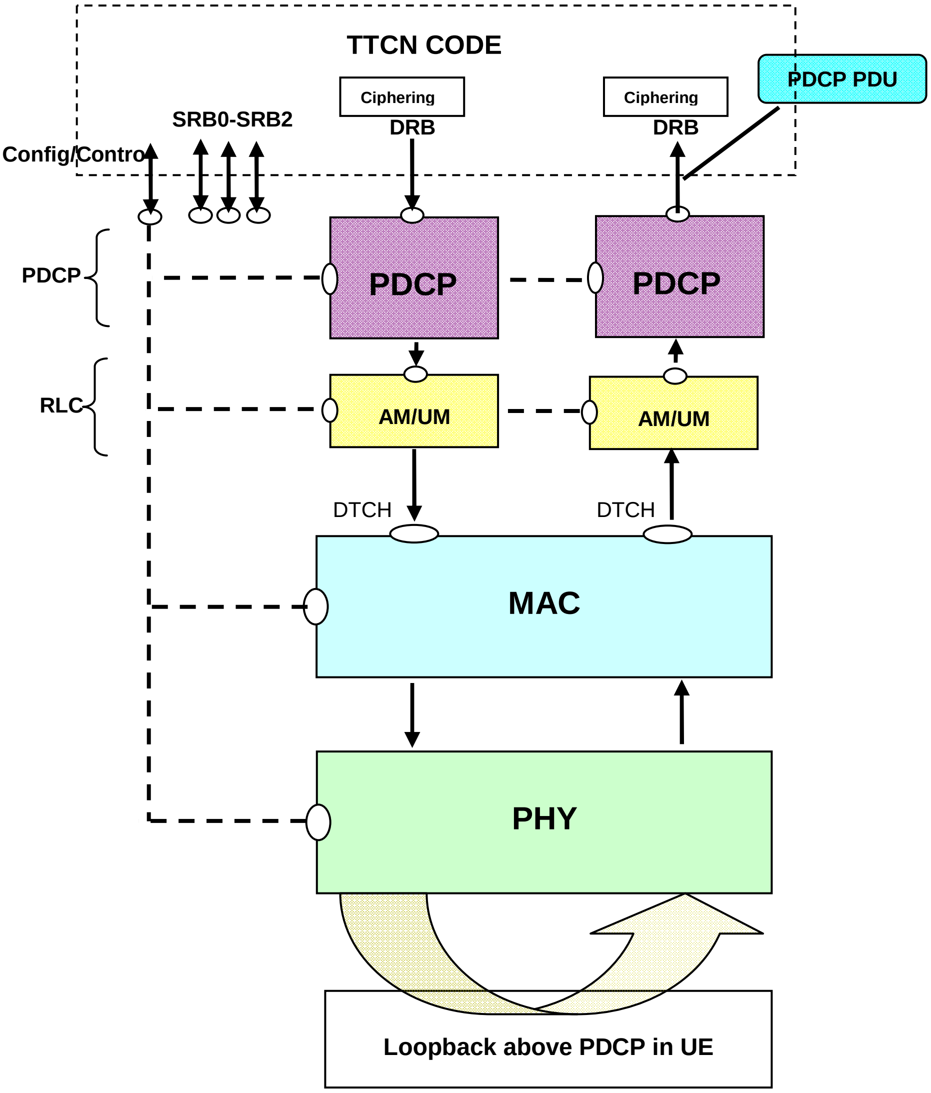

Figure 4.2.1.3.2-1: Test model for PDCP (Non ROHC) testing

The UE is configured in Test Loop Mode, to loop back the user domain data above PDCP layer. On UE side Ciphering is enabled and ROHC is not configured.

On the SS Side L1, MAC and RLC are configured in normal way. They shall perform all of their functions. The ports are above PDCP.

The PDCP is configured in a special mode, named transparent mode. In this mode, SS shall not add PDCP header (DL) and remove PDCP Header (UL). The TTCN maintains sequence numbers and state variables for the PDCP layer. The TTCN makes use of the AS ciphering functionality in both directions, employing the dummy ciphering algorithm. Ciphering/deciphering are performed using TTCN external functions. ROHC is not configured.

The UL Scheduling Grant and DL Scheduling assignments are configured from TTCN over system control port. SS reports PUCCH scheduling information reception over system indication port, if configured.

4.2.2 RRC test model

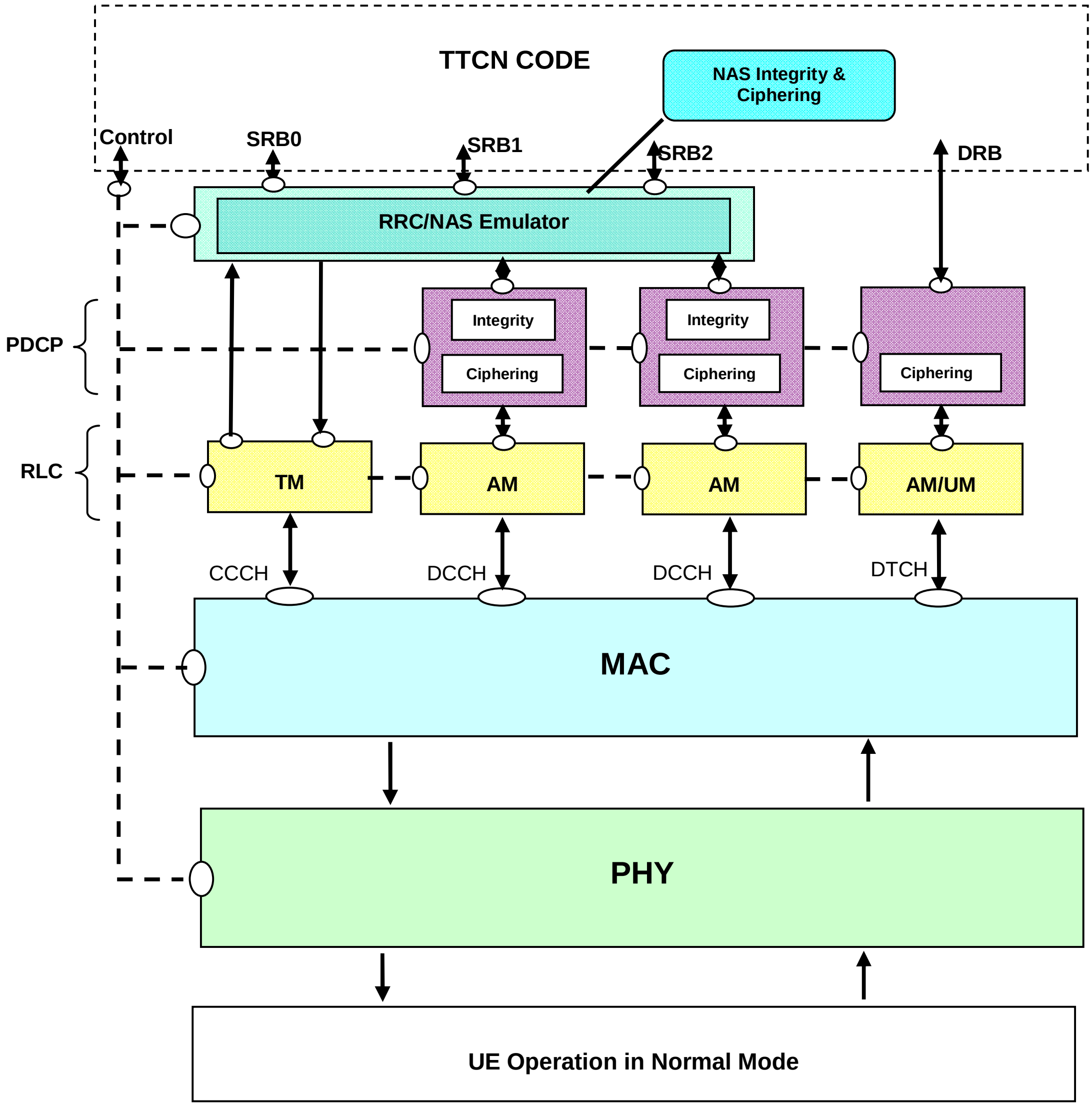
TTCN CODE
NAS Integrity & Ciphering
Control
SRB0
SRB1
SRB2
DRB
RRC/NAS Emulator
PDCP
Integrity
Ciphering
Integrity
Ciphering
Ciphering
RLC
TM
AM
AM
AM/UM
CCCH
DCCH
DCCH
DTCH
MAC
PHY
UE Operation in Normal Mode

Figure 4.2.2-1: Test model for RRC testing

The UE is configured in normal mode. On UE side Ciphering/Integrity (PDCP and NAS) is enabled and ROHC is not configured.

On the SS Side L1, MAC, RLC and PDCP are configured in normal way. They shall perform all of their functions. For SRB0 the DL and UL port is above RLC. For SRB1 and SRB2 the port is above/below the RRC and NAS emulator, which may be implemented as a parallel test component. For DRB, the port is above PDCP. PDCP Ciphering/Integrity is enabled. NAS integrity/Ciphering is enabled.

The RRC/NAS emulator for SRB1 and SRB2 shall provide the Ciphering and integrity functionality for the NAS messages. In UL direction, SS shall report RRC messages, still containing (where appropriate) the secure and encoded NAS message, to the RRC port. In DL, RRC and NAS messages with same timing information shall be embedded in one PDU after integrity and ciphering for NAS messages.

The UL Scheduling Grant and DL Scheduling assignments are configured from TTCN over system control port. SS reports PUCCH scheduling information reception over system indication port, if configured.

4.2.3 DRB test model

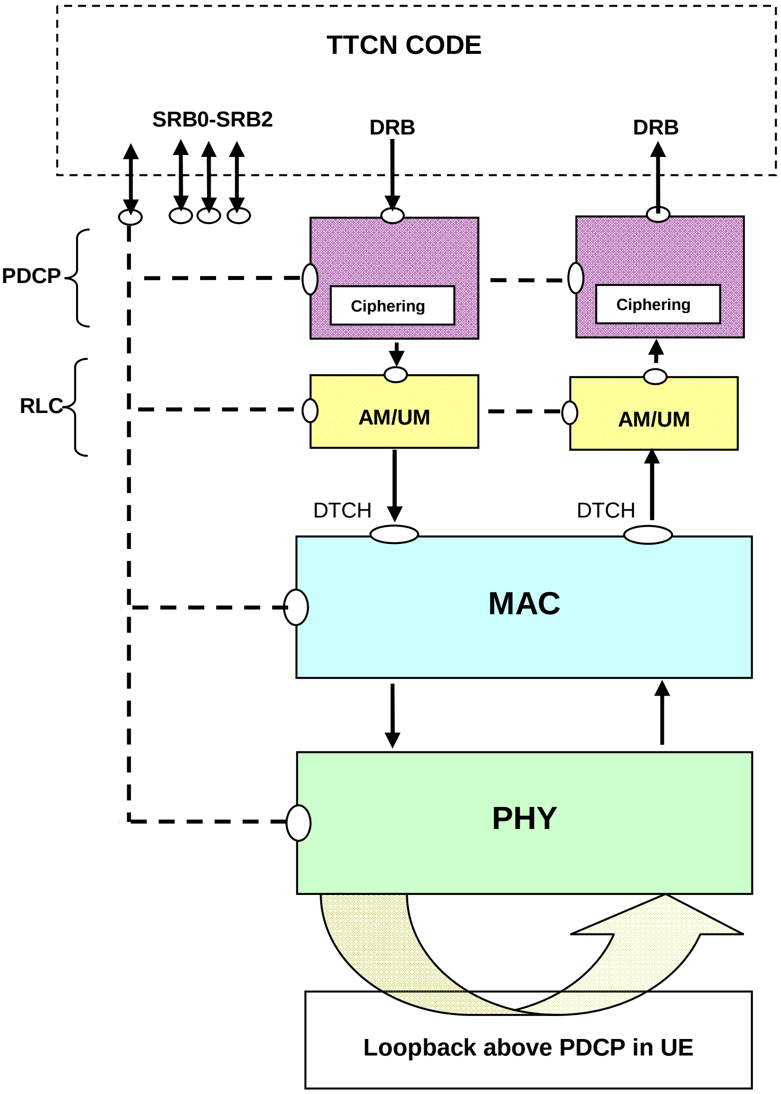

Figure 4.2.3-1: Test model for DRB testing

The UE is configured in Test Loop Mode, to loop back the user domain data above PDCP layer. Ciphering is optionally configured on UE side. In TTCN the DRB data is considered as raw data and there is no IP handling while the UE is in loopback mode.

On the SS Side L1, MAC, RLC and PDCP are configured in normal way. They shall perform all of their functions. The ports are above PDCP. When test loop mode is used for the DRB, the ports at the SS side refer to the raw DRB ones. Ciphering is enabled and ROHC is not configured on SS Side.

SS shall send in DL all PDU's received from different RB's but with same timing control information in one MAC PDU and in one TTI.

The UL Scheduling Grant and DL Scheduling assignments are configured from TTCN over system control port. SS reports PUCCH scheduling information reception over system indication port, if configured.

4.2.4 IP Test Model

Depending on different test scenarios user plane data can be distinguished in:

- Raw user data upon EUTRA PDCP (Raw mode);
- IP user data (IP mode).

The raw user data are applied for L2 or DRB tests, no IP protocols are involved. The UL user data is directly routed to the EUTRA_PTC.

The IP user data are applied when IP packets data are handled in TTCN. A DRB can have one or more Transport and Internet protocols configured.

Whether a DRB is in IP or in raw mode depends on the configuration of the routing table in the DBR-Mux. This is controlled by the IP_CTRL port and independent from the configuration of the IP connections (IP_SOCKET).

4.2.4.1 IP user data

To allow the usage of common protocol implementations at the system adaptor the related interfaces in TTCN-3 are based on the Sockets API.

There can be one or several sockets (server or client) for each DRB: TCP, UDP and ICMP.

Each socket can be clearly identified by the IP address, port number and the protocol (tcp|udp\icmp). It implies that a TCP socket can be either server or client.

It is assumed that:

- Different DRBs are not using the same sockets.
- The UE behaviour of a single IP-based protocol on a specific socket like DHCP can be included in conformance tests.
- Other protocols like ESP are not considered but can easily be introduced later, if necessary, by using the same socket approach.

The routing of IP packets from the IP stack to the DRBs in DL and from the DRBs either to the DRB port (E_DRB in case of EUTRA) or to the IP stack in UL is done by the DRB-Mux. This behaviour is controlled by the DRB-Mux's routing table.

The general architecture of the IP test model is shown in figure 4.2.4.1-1 (with a DHCP server as example for IP handling).

NOTE: In figure 4.2.4.1-1 DHCP is one example for a protocol above the IP stack; other protocols like DNS can also be implemented but this a pure TTCN implementation issue and independent from the system interface.

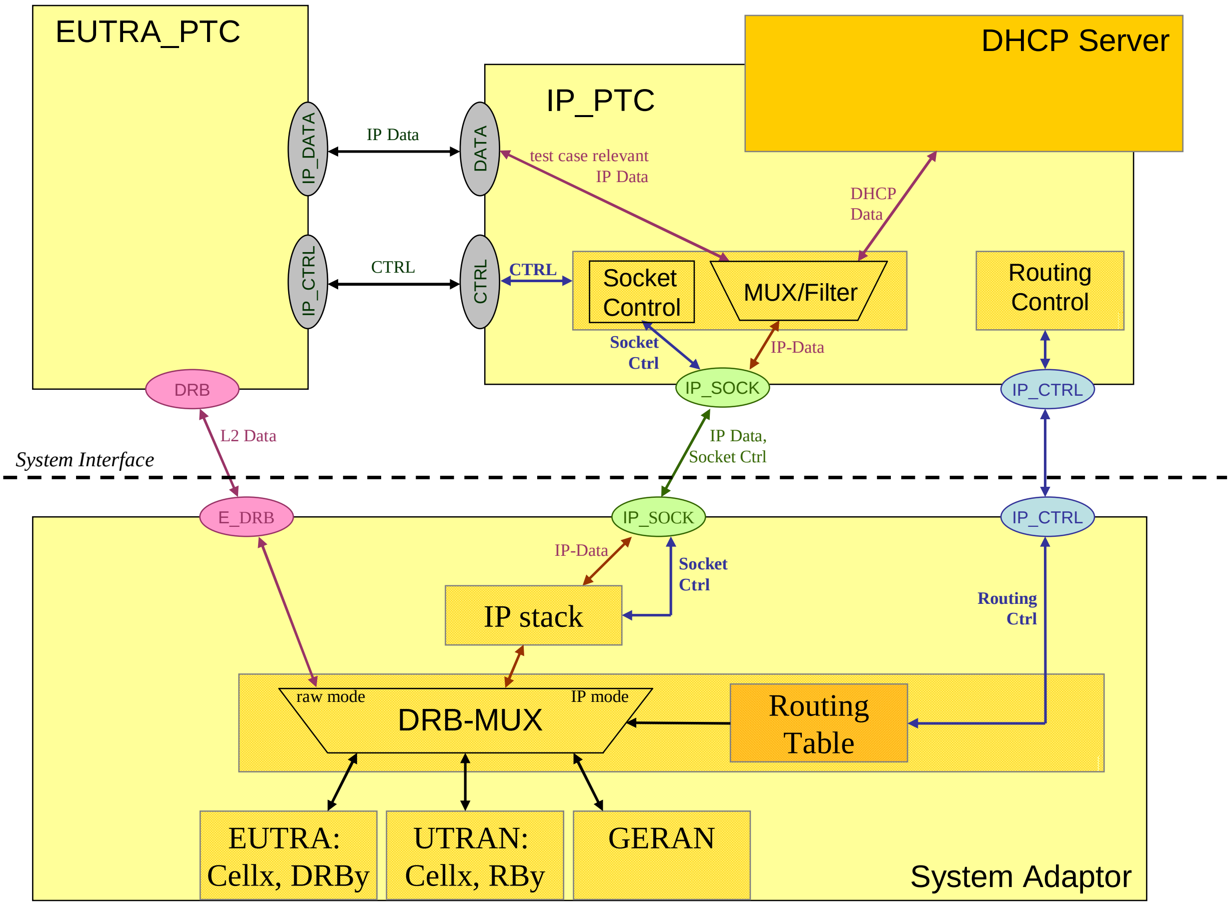
EUTRA_PTC
IP_DATA
IP Data
DATA
IP_CTRL
CTRL
CTRL
DRB
IP_PTC
DHCP Server
test case relevant IP Data
DHCP Data
CTRL
Socket Control
MUX/Filter
Routing Control
Socket Ctrl
IP-Data
IP_SOCK
IP_CTRL
L2 Data
System Interface
IP Data, Socket Ctrl
E_DRB
IP_SOCK
IP_CTRL
IP-Data
Socket Ctrl
IP stack
Routing Ctrl
raw mode
IP mode
DRB-MUX
Routing Table
EUTRA: Cellx, DRBy
UTRAN: Cellx, RBy
GERAN
System Adaptor

Figure 4.2.4.1-1: Example of EUTRA IP test model with a DHCP server

4.2.4.2 Configuration of Sockets

The following configurations are controlled by the IP_PTC (IP_SOCKET_REQ). The socket configuration and the sending/receiving of data are done with the same ASP on the system port IP_SOCK.

4.2.4.2.1 Socket Establishment

TCP server

TCP socket configured as server: the socket 'listens' to a 'connect' from the UE. The socket can be configured by using the following system calls of the Berkeley Sockets API:

- socket (AF_INET | AF_INET6, SOCK_STREAM, 0);
- setsockopt;
- bind (local IP address Port);
- listen.

NOTE: Currently the only socket option being defined is SO_BROADCAST

When the UE connects to the server the connection is accepted with the 'accept' system call.

TCP client

A TCP connection is established to an existing TCP server at the UE side. This can be done with the following system calls:

- socket (AF_INET|AF_INET6, SOCK_STREAM, 0);
- setsockopt;
- connect (remote Server Addr of the UE = IP-Addr + Port).

UDP socket

A UDP socket can be established with the system calls

- socket (AF_INET|AF_INET6, SOCK_DGRAM, 0);
- setsockopt;
- bind (local IP address, Port);
- connect.

NOTE 1: 'setsockopt' can be used to set the option SO_BROADCAST to allow broadcast messages (e.g. for DHCP).

NOTE 2: Usage of 'connect' depends on implementation of the system adaptor.

4.2.4.2.2 Socket Release

A socket is released:

- in case of TCP when the remote entity closes the connection;
- when it is closed explicitly by the IP_PTC (system call 'close').

NOTE: In general the sockets are independent from the configuration of the DRBs. Especially in case of UDP or ICMP the sockets can exist even without any DRB being configured.

4.2.4.3 Handling of IP data

Sending and receiving of IP data is done by the same ASPs as the socket establishment on IP_SOCK. In TTCN the IP data are handled by a separate TTCN component: IP_PTC. This PTC can deal with the data according to the respective protocol, e.g. DHCP. In general, this is out of scope for the (signalling conformance) test case in terms of pass/fail assignment.

The IP_PTC will receive data from sockets being configured for the corresponding IP protocols. Any unrecognised IP packets are discarded by the IP stack in the system adaptor.

When the IP data is relevant for the test purpose, e.g. the test purpose is to test DHCP, the IP data are routed to the EUTRA_PTC. This allows generic protocol implementations for the common case, i.e. IP_PTC and DHCP server are independent from test case specific implementations.

The interface between EUTRA_PTC and IP_PTC is a pure TTCN implementation issue and independent of the system interface. Furthermore it is irrelevant for the system interface whether e.g. the DHCP server is part of the IP_PTC or implemented as a separate PTC.

- For TCP, the primitives to send and receive data correspond to the 'send' and 'recv' system calls.
- For UDP and ICMP, the primitives correspond to the 'sendto' and 'recvfrom' system calls.
- For both UDP and TCP the system adaptor may send ("in-band") error indications in case of system errors. That results in an assignment of inconc by the IP_PTC.

4.2.4.4 Routing of IP Data

The routing of IP data is done in the DRB-Mux which gets a routing table configured. This table associates the address and protocol information of IP packets (protocol, local IP address, local port, remote IP address, remote port) with the radio bearer (RAT, cell, DRB id).

In UL a DRB is considered being in raw mode when there is no entry found in the routing table. It is considered being in IP mode when there is any entry regardless of the protocol and address information being stored, i.e. in UL, the SS does not need to evaluate the IP header to route the data (in raw mode this would cause problems in the case of loopback data).

In DL the IP packets of the IP stack are routed to the DRBs acc. to the routing information in the routing table (see annex D for details.

NOTE: Only the IP PTC can re-configure the Routing Table; if that needs to be triggered by a RAT specific PTC, this is done by appropriate coordination messages but the RAT specific PTCs don't have a direct access to the routing tables.

4.2.4.5 Multiple PDNs

In case multiple PDNs broadcast, or multicast datagrams sent by the UE, need to assigned to the respective PDN:

IPv4

When the UE does not get a valid IPv4 address assigned via NAS signalling it will request the IP address via DHCP. In this case there are DHCP broadcast messages in UL.

In the case of multiple PDNs, it cannot be distinguished by evaluating the IP address to which PDN the message belongs but additional information is necessary:

The network side needs to know which interface (i.e. network) the broadcast comes from; in case of LTE this is associated with the default bearer of the particular PDN.

NOTE: In principle the 'chaddr' field or the 'client identifier' option of the DHCP messages may be used to distinguish different interfaces (e.g. for Ethernet this would be the MAC address) but it is not specified how these fields are to be used by the UE (or how to configure them at the UE); RFCs (e.g. RFC 2131) only require the client identifier to be unique in a given subnet.

IPv6

The UE gets an interface identifier assigned via NAS signalling (TS 24.301 [21] clause 6.2.2) which is used as link-local address during stateless address auto configuration (TS 23.060 [43] clause 9.2.1.1 and TS 29.061 [44] clause 11.2):

The UE may send a ROUTER SOLICITATION message (multicast) to which the network responds with a ROUTER ADVERTISEMENT.

Since the ROUTER SOLICITATION message contains the interface identifier as assigned via NAS signalling, even in the case of multiple PDNs it can distinguished which PDN is concerned, as long as the interface identifiers are different for different PDNs (for UE side as well as for network side).

NOTE: According to TS 23.060 [43] clause 9.2.1.1 and RFC 3314 a real network (PDN-GW) itself shall send an (unsolicited) ROUTER ADVERTISEMENT after it has assigned the interface identifier.

Conclusions and Requirements:

In the case of broadcast or multicast messages TTCN needs additional information about the PDN being addressed.

When a socket connection is configured to allow broadcasts and there is a broadcast or multicast message in UL the SS shall provide information about on which bearer the datagram has been sent (RAT, cell, DRB id).

NOTE: From the socket programming point of view multiple PDNs for the SS are like a multi-homed host: Servers for different interfaces are bound to different interfaces (e.g. using the ‘bind’ system call with a specific IP address instead of IPADDR_ANY) or a server may retrieve the interface id for a received datagram from the IP stack with an appropriate system call.

Even though the details are implementation dependent, the SS shall be capable of:

determining RAT, cell, DRB id for any broadcast or multicast datagram in UL

avoiding any duplication of messages in UL even when multiple servers are listening to broadcast/multicast messages (what is a possible SS implementation)

4.2.4.6 IP Addresses Guidelines

4.2.4.6.1 Common Structure of IP Addresses

IPv4:

Network prefix (subnet address)	n bits
Host part	32-n bits

with 'n' e.g. depending on the network class

IPv6:

Network prefix	
Global routing prefix	64 – n bits
Subnet ID	n bits
Interface ID	64 bits

Addresses within one network (PDN) have all the same subnet address (IPv4) or global routing prefix (IPv6)

NOTE: As a consequence at the system simulator, routing can be done based on appropriate network masks, but that is dependent on SS implementation and therefore is out of scope for this document.

4.2.4.6.2 Common Requirements regarding IP Addresses

IP addresses are configured via PIXIT parameters as defined in clause 9.1.

These PIXIT parameters shall fulfil the following requirements:

Network and UE addresses shall be different from each other

Network entities (DHCP server, DNS server, P-CSCF etc.) of a given PDN shall all have the same global routing prefix (IPv6) or subnet address (IPv4).

The IP address assigned to the UE shall have the same global routing prefix (IPv6) or subnet address (IPv4) as the corresponding network.

Requirements for IPv6: according to TS 23.401, cl. 5.3.1.2.2

The 64 bit network prefix of a UE's IPv6 address is unique

The UE may change its interface id during auto configuration

The UE must use the given interface id in the link local address for router solicitation but may use any other interface id in the global address

NOTE: As a consequence, the SS implementation needs to cope with the changing of the UE address and cannot rely on static IP address assignment to the UE.

Global routing prefix (IPv6) and subnet address (IPv4) shall be different for different PDNs

Home agent address:

The home agent is located in the UE's home network (which shall be considered to find an appropriate network prefix for the home agent's IP address)

In order to simplify implementations, the following rules shall be applied:

The IPv6 interface identifier as assigned to the UE via NAS signalling shall be unique, i.e.

It shall be different for different PDNs

It shall differ from the interface ids of the other entities on the link (in general the interface id of the PDN-GW)

Multiple PDNs shall have different IPv6 interface identifier for the PDN-GW

NOTE: Consistency checks for addresses of different PDNs can be done based on an appropriate network mask (IPv4, e.g. 255.255.255.0) and global routing prefix (IPv6, e.g. 2001:db8:1234::/48).

4.2.4.6.3 Network Entities and their IP addresses

In general and in accordance of IMS test cases in TS 36.523-1 [1] and TS 34.229-1 [40] the simulated network architecture can be illustrated as in Figure 4.2.4.6.3-1.

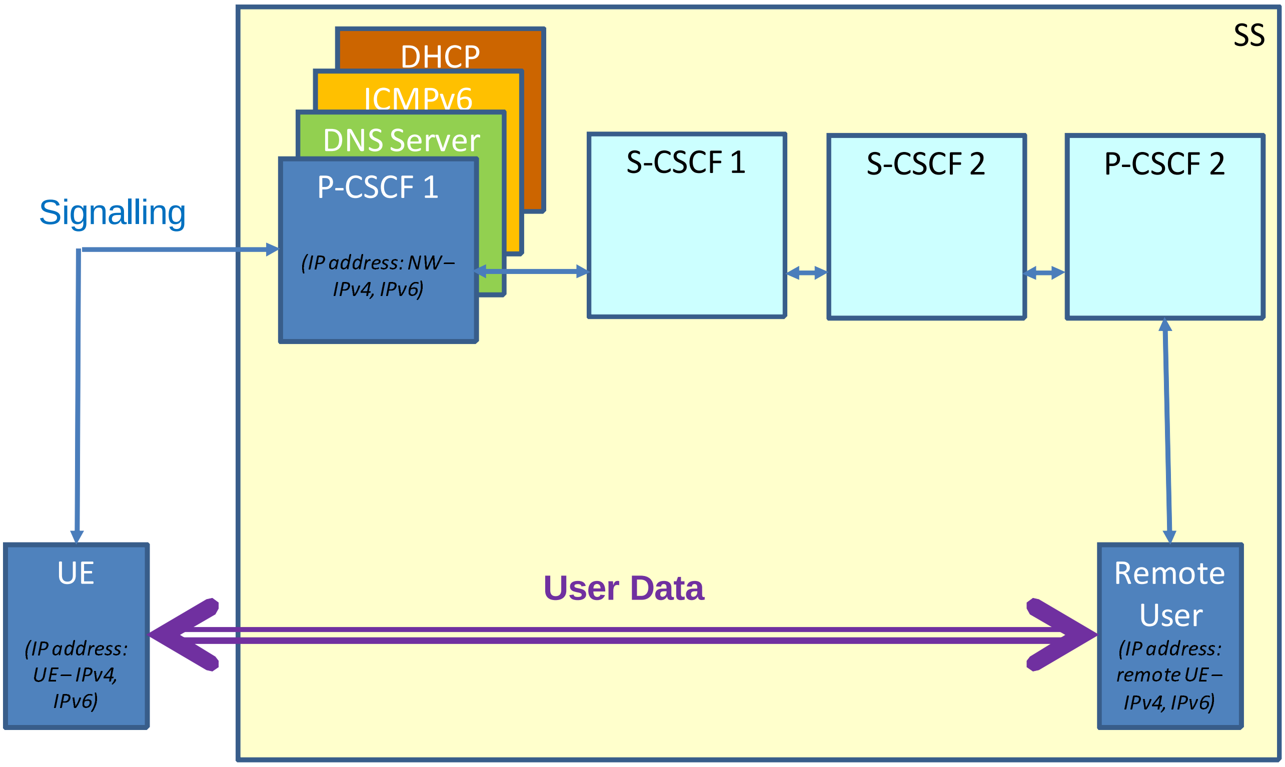
SS
DHCP
ICMPv6
DNS Server
P-CSCF 1
(IP address: NW–IPv4, IPv6)
S-CSCF 1
S-CSCF 2
P-CSCF 2
Signalling
UE
(IP address: UE–IPv4, IPv6)
User Data
Remote User
(IP address: remote UE–IPv4, IPv6)

Figure 4.2.4.6.3-1:

For simplification and to keep the number of PIXITs small , several network entities share the same PIXIT:

px_IPv4_Address*XX*_NW:	P-CSCF 1 (IPv4 address), DNS Server (IPv4 address), DHCP Server
px_IPv6_Address*XX*_NW:	P-CSCF 1 (IPv6 address), DNS Server (IPv6 address), ICMPv6 Server

("*XX*" refers to the respective PDN)

In general , in test cases according to TS 36.523-1 [1] and TS 34.229-1 [40] no IP addresses are needed for S-CSCF 1, S-CSCF 2 or P-CSCF 2

4.2.4.7 User Plane Signalling for Address Allocation

For IPv4, the UE gets assigned the IP address via NAS signalling unless it explicitly requests to use DHCP.

For IPv6, the UE gets assigned a unique interface identifier to be used until it has successfully performed the auto-configuration procedure (Ref. to RFC 2462).

> NOTE: This clause specifies behaviour of the SS (TTCN) to achieve successful IP signalling; but in general, IP signalling is out of scope for conformance tests as defined in TS 36.523-1 [1].

4.2.4.7.1 DHCP

When the UE supports IPv4 and does not get an IPv4 address via NAS signalling it will request the address via DHCP (Ref. to RFC2131).

The UE may send a **DHCPDISCOVER** with or without Rapid Commit Option (Ref. to RFC 4039):

> UE sends **DHCPDISCOVER** according to table 4.2.4.7.1-1 with Rapid Commit Option.
>
> TTCN sends **DHCPACK** according to table 4.2.4.7.1-4
>
> UE sends **DHCPDISCOVER** according to table 4.2.4.7.1-1 without Rapid Commit Option.
>
> TTCN sends **DHCPOFFER** according to table 4.2.4.7.1-2

When the Rapid Commit option is not used the UE sends a DHCPREQUEST as response to the DHCPOFFER:

> UE sends **DHCPREQUEST** according to table 4.2.4.7.1-3
>
> TTCN sends **DHCPACK** according to table 4.2.4.7.1-4

Any other DHCP messages shall be ignored by TTCN.

Table 4.2.4.7.1-1: DHCPDISCOVER

UDP		
SRC ADDR	0.0.0.0	any address
SRC Port	68	not checked
DEST ADDR	255.255.255.255	broadcast
DEST Port	67	
DHCP		
op	‘01’O	BOOTREQUEST
htype	any value	
hlen	any value	
hops	any value	
xid	any value	
secs	any value	
flags	any value	
ciaddr	any value	0 according to RFC 2131 Table 5
yiaddr	any value	0 according to RFC 2131 Table 5
siaddr	any value	0 according to RFC 2131 Table 5
giaddr	any value	0 according to RFC 2131 Table 5
chaddr	any value	client’s hardware address
sname	any value	(may be overloaded with further options)
file	any value	(may be overloaded with further options)
options		NOTE
magic cookie	‘63825363’O	
message type	‘01’O	DHCPDISCOVER
rapid commit	present	shortened address assignment by 2-message exchange acc. to RFC 4039
	not present	address assignment by 4-message exchange
NOTE: Any further options are not evaluated and ignored by TTCN		

Table 4.2.4.7.1-2: DHCPOFFER

UDP		
SRC ADDR	valid server address	address as configured by PIXIT
SRC Port	67	
DEST ADDR	255.255.255.255	broadcast
DEST Port	68	
DHCP		
op	‘02’O	BOOTREPLY
htype	as in corresponding DHCPDISCOVER	NOTE 1
hlen	as in corresponding DHCPDISCOVER	NOTE 1
hops	‘00’O	NOTE 2
xid	as in corresponding DHCPDISCOVER	NOTE 2
secs	‘0000’O	NOTE 2
flags	as in corresponding DHCPDISCOVER	NOTE 2
ciaddr	‘00000000’O	NOTE 2
yiaddr	valid UE address	address to be assigned to the UE (as configured by PIXIT)
siaddr	0	the UE does not need to retrieve any operating system executable image
giaddr	as in corresponding DHCPDISCOVER	NOTE 2
chaddr	as in corresponding DHCPDISCOVER	NOTE 2
sname	‘0000000000000000’O	
file	‘00000000000000000000000000000000’O	
options		
magic cookie	‘63825363’O	
message type	‘02’O	DHCPOFFER
lease time	86400	one day; mandatory (NOTE 2)
server identifier	server address	server address as used in the UDP header
NOTE 1: To get any valid value NOTE 2: According to table 3 in RFC 2131		

Table 4.2.4.7.1-3: DHCPREQUEST

UDP		
SRC ADDR	0.0.0.0	any address
SRC Port	68	not checked
DEST ADDR	255.255.255.255	broadcast
DEST Port	67	
DHCP		
op	‘01’O	BOOTREQUEST
htype	any value	
hlen	any value	
hops	any value	
xid	any value	
secs	any value	
flags	any value	
ciaddr	any value	0 according to RFC 2131 Table 5
yiaddr	any value	0 according to RFC 2131 Table 5
siaddr	any value	0 according to RFC 2131 Table 5
giaddr	any value	0 according to RFC 2131 Table 5
chaddr	any value	client’s hardware address
sname	any value	(may be overloaded with further options)
file	any value	(may be overloaded with further options)
options		NOTE
magic cookie	‘63825363’O	
message type	‘02’O	DHCPREQUEST
NOTE: Any further options are not evaluated and ignored by TTCN		

Table 4.2.4.7.1-4: DHCPACK

UDP		
SRC ADDR	valid server address	address as configured by PIXIT
SRC Port	67	not checked
DEST ADDR	255.255.255.255	broadcast
DEST Port	68	
DHCP		
op	‘02’O	BOOTREPLY
htype	‘01’O	
hlen	as in corresponding DHCPREQUEST or DHCPDISCOVER	NOTE
hops	‘00’O	NOTE
xid	as in corresponding DHCPREQUEST or DHCPDISCOVER	NOTE
secs	‘0000’O	NOTE
flags	as in corresponding DHCPREQUEST or DHCPDISCOVER	NOTE
ciaddr	‘00000000’O	NOTE
yiaddr	valid UE address	address to be assigned to the UE (as configured by PIXIT)
siaddr	0	the UE does not need to retrieve any operating system executable image
giaddr	as in corresponding DHCPREQUEST or DHCPDISCOVER	NOTE
chaddr	as in corresponding DHCPREQUEST or DHCPDISCOVER	NOTE
sname	‘0000000000000000’O	
file	‘00000000000000000000000000000000’O	
options		
magic cookie	‘63825363’O	
message type	‘05’O	DHCPACK
lease time	86400	one day; mandatory (NOTE)
server identifier	server address	server address as used in the UDP header
NOTE: According to table 3 in RFC 2131		

4.2.4.7.2 DHCPv6

DHCPv6 is not needed for E-UTRA conformance tests as defined in 36.523-1[1]

4.2.4.7.3 ICMPv6

When the UE supports IPv6 it will perform IPv6 Stateless Address Auto configuration according to RFC 4862. The UE sends an **ICMPv6 Router Solicitation** message according to table 4.2.4.7.3-1; as response the TTCN sends an **ICMPv6 Router Advertisement** message according to table 4.2.4.7.3-2.

NOTE: The TTCN does not send any (periodic) unsolicited Router Advertisement, i.e. the UE is expected to ask for an immediate advertisement whenever it is needed.

Any other ICMPv6 messages are ignored by the TTCN (especially in accordance to TS 23.060, clause 9.2.1.1, the TTCN silently discards Neighbour Solicitation).

Table 4.2.4.7.3-1: ICMPv6 Router Solicitation

IPv6		
SRC ADDR	link local address	NOTE 1
DEST ADDR	multicast address	NOTE 2
ICMPv6 (Ref. to RFC 4861)		
type	133	Router Solicitation
code	0	
checksum	not checked	
reserved	ignored	
options		
source link-layer address	ignored if present	
other options	ignored	

NOTE 1: The UE shall use the interface identifier as assigned via NAS signalling (but this is not checked in TTCN).
NOTE 2: TTCN detects the multicast address by checking it to start with FF02 but accepts any of these addresses.

Table 4.2.4.7.3-2: ICMPv6 Router Advertisement

IPv6		
SRC ADDR	link local address (NW)	NOTE 1
DEST ADDR	link local address (UE)	NOTE 2
ICMPv6 (Ref. to RFC 4861)		
type	134	Router Advertisement
code	0	
checksum	calculated by TTCN	
current hop limit	64	arbitrarily selected
m-flag	‘0’B	no “Managed address configuration”; NOTE 3
o-flag	‘0’B	no “Other configuration”
reserved	'000000'B	
router lifetime	65535	max. value
reachable time	0	unspecified
retrains timer	0	unspecified
options		
source link-layer address	not present	
mtu	not present	
prefix information		
type	‘03’O	
length	4	
prefix length	64	/64 IPv6 prefix acc. to TS 23.401
on-link flag	‘0’B	no “On-link detection”; NOTE 3
autonomous address configuration flag	‘0’B	
reserved1	‘000000’B	
valid lifetime	'FFFFFFFF'O	infinity; NOTE 3
preferred lifetime	'FFFFFFFF'O	infinity; NOTE 3
reserved2	‘00000000’B	
prefix	globally unique /64 IPv6 prefix to be assigned to the UE	NOTE 4, 5

NOTE 1: The server’s link local address is derived from the server’s global IPV6 address (PIXIT parameter)
NOTE 2: As received as SRC address of the corresponding Router Solicitation
NOTE 3: Acc. to TS 29.062 clause 11.2.1.3.2
NOTE 4: The routing prefix of the UE’s global IPv6 address is derived from the respective PIXIT parameter NOTE 5: Since the UE may change its interface identifier after successful auto configuration to any value in general the IPv6 address used by the UE differs from the PIXIT

4.2.4.7.4 DNS

DNS is not needed for E-UTRA conformance tests as defined in 36.523-1[1].

4.2.4A LTE-Carrier Aggregation test Models

4.2.4A.1 CA-MAC test model

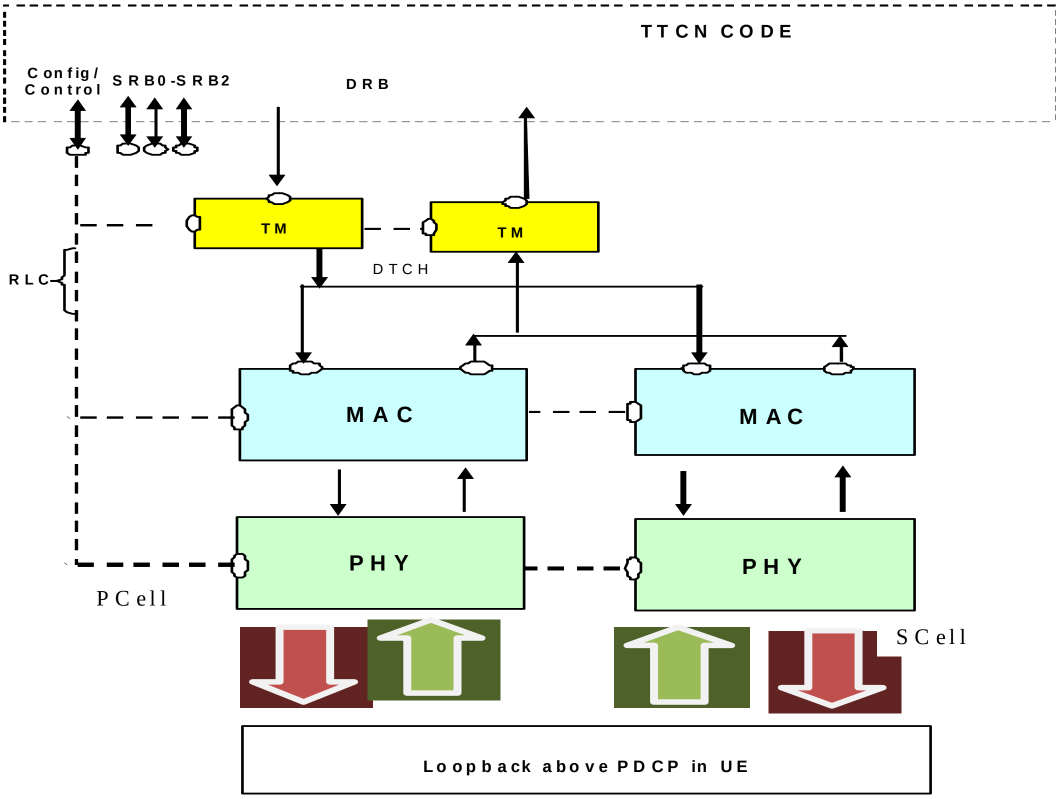

Figure 4.2.4A.1-1: Test model for CA-MAC testing

The UE is configured in Test Loop Mode, to loop back the user domain data above PDCP layer. On UE side Ciphering is enabled (since Mandatory) but with dummy ciphering algorithm, which is equivalent to not using ciphering. ROHC is not configured on UE Side.

On the SS Side,

Pcell only: On DRBs the RLC is configured in transparent mode. Hence with this configuration PDU's out of SS RLC are same as the SDU's in it. There is no PDCP configured on SS Side. The ports are directly above RLC.

Pcell/Scell: Layer 1 is configured in the normal way. MAC is configured in a special mode, where it does not add any MAC headers in DL and /or not remove any MAC headers in UL directions respectively at DRB port. In this case, the TTCN shall provide the final PDU, including padding. Except for this, the MAC layer shall perform all of its other functions. For SRB’s/BCCH/PCCH the configuration is same as in CA-RRC test model.

There are two different test modes in which MAC header addition/removal can be configured:

DL/UL header-transparent mode: no header addition in DL and no header removal in UL.

DL only header-transparent mode: no header addition in DL; UL MAC is configured in normal mode to remove MAC header and dispatch the MAC SDUs according to the logical channel Ids.

If SS MAC is configured in DL/UL header-transparent mode, the PDU's exchanged at the DRB port between TTCN and SS, shall be the final MAC PDU's consisting of MAC, RLC and PDCP headers. TTCN code shall take care in DL of building MAC header, RLC headers and PDCP headers and in UL handle MAC, RLC and PDCP headers. TTCN code shall take care of maintaining sequence numbers and state variables for RLC and PDCP layers. During testing of multiple DRBs at the UE side, it shall still be possible to configure only one DRB on SS side with configuration in the figure 4.2.4A.1-1. Other DRBs will not be configured, to facilitate routing UL TBs. Multiplexing/de-multiplexing of PDUs meant/from different DRBs shall be performed in TTCN. Since the MAC layer does not evaluate the MAC headers in UL it cannot distinguish between SRB and DRB data in UL. Therefore there shall be no SRB traffic while MAC is configured in this test mode.

If SS MAC is configured in DL only header-transparent mode, the UL PDUs exchanged at the DRB port between TTCN and SS, shall be final RLC PDUs consisting of RLC and PDCP headers. SS shall route these PDUs based on logical channel IDs. In DL, TTCN sends fully encoded MAC PDUs at the DRB port (consisting of MAC, RLC and PDCP headers). In this case TTCN needs to take care of maintaining sequence numbers and state variables for RLC and PDCP layers. Furthermore in UL and DL the SS MAC layer shall be capable of dealing with SRB data (i.e. it shall handle DL RLC PDUs coming from SRBs RLC layer or dispatch UL RLC PDUs to SRBs) as in normal mode.

NOTE: TTCN shall ensure that no DL MAC SDUs in normal mode and DL MAC PDUs in test mode are mixed for the same TTI.

The UL Scheduling Grant and DL Scheduling assignments are configured from TTCN over system control port. SS reports PUCCH scheduling information reception in Pcell over system indication port, if configured. In a similar way the reception of RACH preambles in Pcell is reported by SS over the same port.

4.2.4A.2 CA-RRC test model

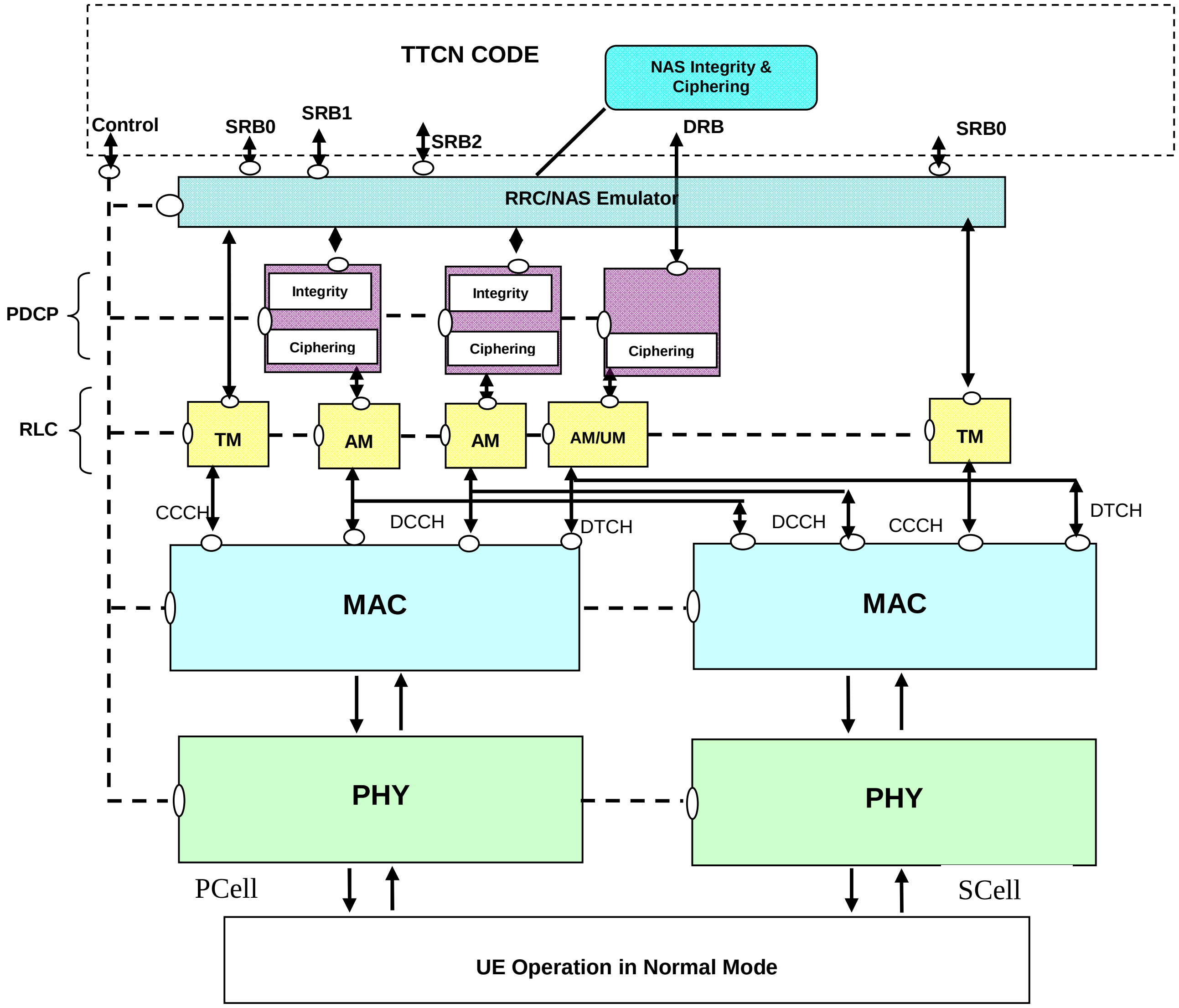
TTCN CODE
NAS Integrity & Ciphering
Control
SRB0
SRB1
SRB2
DRB
SRB0
RRC/NAS Emulator
PDCP
Integrity
Ciphering
Integrity
Ciphering
Ciphering
RLC
TM
AM
AM
AM/UM
TM
CCCH
DCCH
DTCH
DCCH
CCCH
DTCH
MAC
MAC
PHY
PHY
PCell
SCell
UE Operation in Normal Mode

Figure 4.2.4A.2-1: Test model for CA-RRC testing

The UE is configured in normal mode. On UE side Ciphering/Integrity (PDCP and NAS) is enabled and ROHC is not configured.

On the SS Side L1 (Pcell/Scell), MAC (Pcell/Scell), RLC (Pcell) and PDCP (Pcell) are configured in normal way. They shall perform all of their functions. For SRB0 the DL and UL port is above RLC. For SRB1 and SRB2 the port is above/below the RRC and NAS emulator, which may be implemented as a parallel test component. For DRB, the port is above PDCP. PDCP Ciphering/Integrity is enabled. NAS integrity/Ciphering is enabled.

Note: RLC for BCCH/ PCCH/CCH are configured per serving cell; RLC and PDCP for DCCH/DTCH are configured only in Pcell and are additionally multiplexed on MAC of associated Scells.

The RRC/NAS emulator for SRB1 and SRB2 shall provide the Ciphering and integrity functionality for the NAS messages. In UL direction, SS shall report RRC messages, still containing (where appropriate) the secure and encoded NAS message, to the RRC port. In DL, RRC and NAS messages with same timing information shall be embedded in one PDU after integrity and ciphering for NAS messages.

The UL Scheduling Grant and DL Scheduling assignments are configured from TTCN over system control port. SS reports PUCCH scheduling information reception over system indication port, if configured.

4.2.5 IP model extension for IMS

The IMS test model is based on the IP Test Model with extensions to support IPsec. Support of Signalling Compression (SigComp) may be added in the future if needed.

IMS in general may use TCP, UDP or alternated TCP/UDP as transport layer for signalling messages.

At TTCN-3 system interface level there are no IMS specific ports or ASPs, i.e. IMS specific issues are purely handled in TTCN and therefore out of scope for this document.

NOTE: Even though the main intention to introduce the IMS test model is to support the initial IMS registration procedure, the IMS test model is independent of any specific IMS procedures.

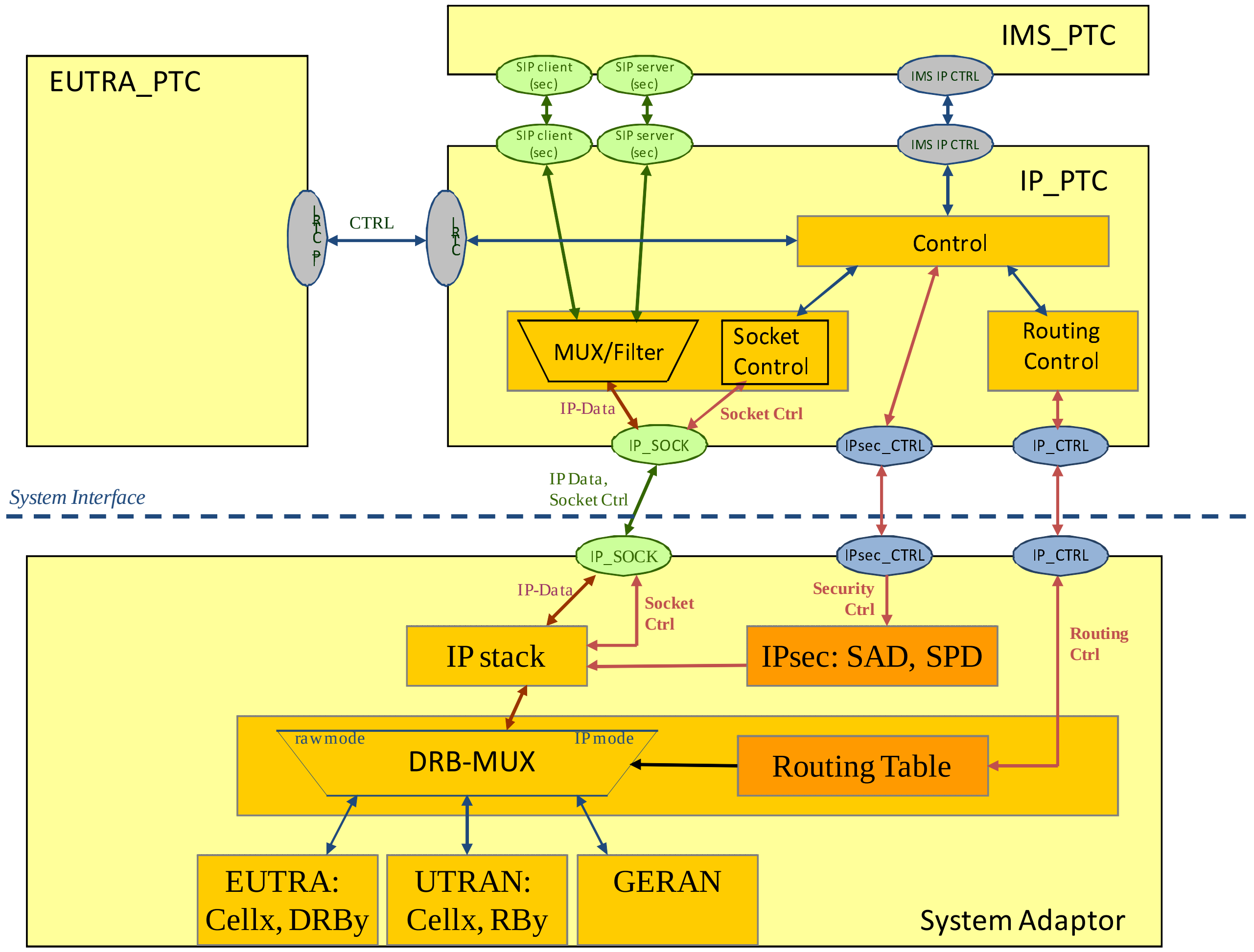
IMS_PTC
SIP client (sec)
SIP server (sec)
IMS IP CTRL
EUTRA_PTC
SIP client (sec)
SIP server (sec)
IMS IP CTRL
IP_PTC
CTRL
Control
MUX/Filter
Socket Control
Routing Control
IP-Data
Socket Ctrl
IP_SOCK
IPsec_CTRL
IP_CTRL
IP Data, Socket Ctrl
System Interface
IP_SOCK
IPsec_CTRL
IP_CTRL
IP-Data
Socket Ctrl
Security Ctrl
Routing Ctrl
IP stack
IPsec: SAD, SPD
raw mode
IP mode
DRB-MUX
Routing Table
EUTRA: Cellx, DRBy
UTRAN: Cellx, RBy
GERAN
System Adaptor

Figure 4.2.5-1: Example for IP model supporting IMS

NOTE 1: At the system interface IPsec is the only difference compared to the IP model of clause 4.2.4

NOTE 2: It is a working assumption to have a separate PTC for IMS as shown in figure 4.2.5-1

NOTE 3: Ports between the IP_PTC and the IMS_PTC are for illustration only

4.2.5.1 IPsec

IPsec involves security policy database (SPD) and security association database (SAD) (Ref. RFC4301). The entries in the databases are configured with security parameters by ASPs at the IPsec_CTRL port.

NOTE: IPsec is not directly associated to a given socket but IPsec is applied to IP packets matching a configured security association. ⇒ configuration of IPsec in general is independent of the existence of sockets but typically the IPsec configuration is done just before establishment of a corresponding socket.

The SS shall cleanup all IPsec database entries which has been setup by TTCN during a test case at the end of the test case independent of how the test case terminates (normal termination, run-time error etc.)

4.2.5.1.1 Security Association

NOTE: Within this clause SA is used as abbreviation of ‘Security Association’ (i.e. not as abbreviation for ‘System Adaptor’ as usual)

During the IMS signalling handling two pairs of SAs consisting of four unidirectional SAs will be used, one pair of SAs (SA2 and SA4) is between the server port of UE and the client port of the SS, another pair of SAs (SA1 and SA3) is between the client port of UE and the server port of the SS, see figure 4.2.5.2.3.1-1.

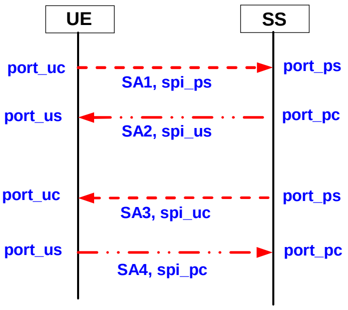
UE
SS
port_uc
SA1, spi_ps
port_ps
port_us
SA2, spi_us
port_pc
port_uc
SA3, spi_uc
port_ps
port_us
SA4, spi_pc
port_pc

Figure 4.2.5.2.3.1-1 Two pairs of SAs

SA1 used for data flow from port_uc to port_ps is an inbound SA for protected server port of P-CSCF, its Security Parameter Index spi_ps is selected by P-CSCF (IMS Registration/Authentication function in IP_PTC) and presented in 401 Unauthorised; SA2 used for data flow from port_pc to port_us is an inbound SA for protected server port of UE, its Security Parameter Index spi_us is selected by UE and presented in initial REGISTER message; SA3 used for data flow from port_ps to port_uc is an inbound SA for protected client port of UE, its Security Parameter Index spi_uc is selected by UE and presented in initial REGISTER message; SA4 used for data flow from port_us to port_pc via an inbound SA for client port of P-CSCF, its Security Parameter Index spi_pc is selected by P-CSCF (IMS Registration/Authentication function in IP_PTC) and presented in 401 Unauthorised message. The pair of SA1 and SA3 is for bidirectional traffic between port_uc and port_ps. The pair of SA2 and SA4 is for bidirectional traffic between port_pc and port_us. Those four spi_xx and other security parameters are negotiated during security association set up procedure and shall be passed to IPsec protocol layer in the SS. See "SAD and SPD" and clause 7.2 of TS 33.203 [41].

These four unidirectional SA and relevant ports are shared by TCP and UDP. TCP transport will use all four SAs, UDP transport uses only two SAs, because there is no traffic from port_ps to port_uc, nor from port_us to port_pc. Figure 4.2.5.2.3.1-2 shows the usage of ports and SAs under UDP and TCP transport in a generic registration procedure (see clause C.2 of TS 34.229-1 [40]).

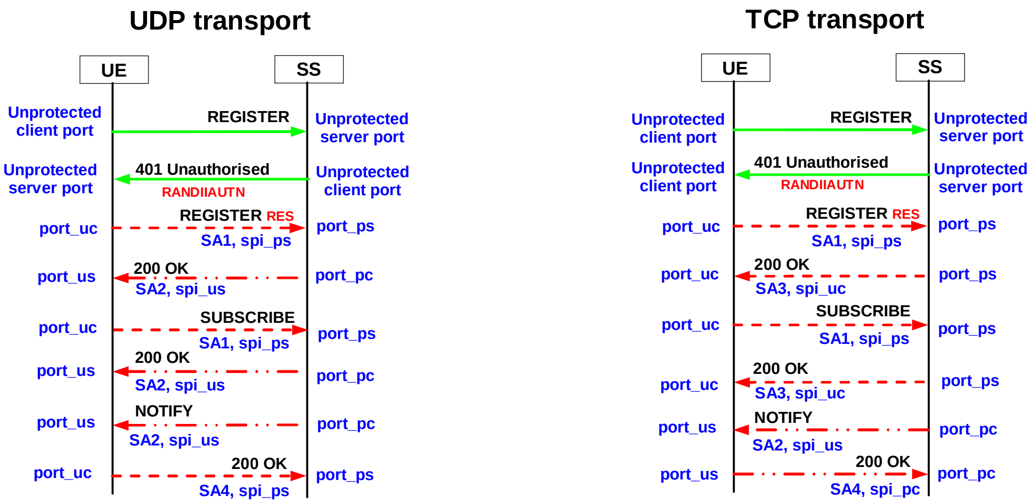
UDP transport
UE
SS
Unprotected client port
REGISTER
Unprotected server port
Unprotected server port
401 Unauthorised
RANDIIAUTN
Unprotected client port
REGISTER RES
port_uc
SA1, spi_ps
port_ps
port_us
200 OK
SA2, spi_us
port_pc
port_uc
SUBSCRIBE
SA1, spi_ps
port_ps
port_us
200 OK
SA2, spi_us
port_pc
port_us
NOTIFY
SA2, spi_us
port_pc
port_uc
200 OK
SA4, spi_ps
port_ps
TCP transport
UE
SS
Unprotected client port
REGISTER
Unprotected server port
Unprotected client port
401 Unauthorised
RANDIIAUTN
Unprotected server port
port_uc
REGISTER RES
SA1, spi_ps
port_ps
port_uc
200 OK
SA3, spi_uc
port_ps
port_uc
SUBSCRIBE
SA1, spi_ps
port_ps
port_uc
200 OK
SA3, spi_uc
port_ps
port_us
NOTIFY
SA2, spi_us
port_pc
port_us
200 OK
SA4, spi_pc
port_pc

Figure 4.2.5.2.3.1-2: Usage of ports and SAs in UDP and TCP transport

4.2.5.1.2 SAD and SPD

SAD and SPD are used by IPsec to store various security parameters (per Security Association). During IMS AKA, the UE and the IMS Registration/Authentication function in IP_PTC negotiates the negotiable parameters for security association setup, this negotiation is carried out at the SIP level in TTCN-3, and the resulting security association parameters are maintained in TTCN-3. The involved parameters are:

spi_uc; spi_us; spi_pc; spi_ps

encryption algorithm

integrity algorithm

The IMS AKA will generate key IK_{IM}, the security parameters IK_{ESP} and CK_{ESP} are derived from IK_{IM} and CK_{IM} in TTCN-3 (Ref. Annex I of TS 33.203[41]). ASPs are used to pass these parameters (per security association and with its selectors) from TTCN-3 to SAD and SPD of IPsec layer in the SS.

The same IK_{ESP} and CK_{ESP} will be used for the four unidirectional SAs. All of the four unidirectional SAs will use the same negotiated encryption algorithm and integrity algorithm.

In addition to those negotiable security parameters, other security parameters are fixed in IMS environment (see clause 7.1 of TS 33.203 [41]):

Life type:	second
SA duration:	2^{32}-1
Mode:	transport
IPsec protocol:	ESP, ESP integrity applied
Key length:	192 bits for DES-EDES_CBC, 128 bits for AES-CBC and HMAC-MD5-96; 160 bits for HMAC-SHA-1-96

These parameters are hard coded with IPsec implementation in the SS, not passed from TTCN-3.

An SA have to be bound to selectors (specific parameters) of the data flows between UE and P-CSCF (IMS Registration/Authentication function in IP_PTC), the selectors are:

source IP address

destination IP address

source port

destination port

transport protocols that share the SA

IP addresses bound to the two pairs of SAs are:

For inbound SAs at the P-CSCF (the SS side):

- The source and destination IP addresses associated with the SA are identical to those in the header of the IP packet in which the initial SIP REGISTER message was received by the P-CSCF.

For outbound SAs at the P-CSCF (the SS side):

- The source IP address bound to the outbound SA equals the destination IP address bound to the inbound SA; the destination IP address bound to the outbound SA equals the source IP address bound to the inbound SA.

Ports bound to the two pairs of SAs are depictured in figure 4.2.5.2.3.1-1, port_ps and port_pc shall be different from the default SIP ports 5060 and 5061. The number of the ports port_ps and port_pc are communicated to the UE during the security association setup procedure.

The transport protocol selector shall allow UDP and TCP.

The selectors are passed to the SS IPsec layer together with the security parameters related to an SA bound to the selectors.

4.2.5.2 Signalling Compression (SigComp)

Signalling compression is mandatory (see clause 8 of TS 24.229 [42]) and Signalling compression (RFC 3320 [43], RFC 3485 [44], RFC 3486 [45], RFC 4896 [46], RFC 5049 [47]) protocol is used for SIP compression. SigComp entity in the model is used to carry out the compression/decompression functions. In receiving direction of the SS the SigComp entity will detect whether the incoming SIP message is compressed, and decompress the message if it is compressed. In the SS transmitting direction, the TTCN, via ASP, controls when the compression of outgoing SIP message is started. Stateless compression is not used in the SIP environment. For state full operation of SigComp the ASP passing compartment ID to SigComp is applied. The SS shall clean all states related to a connection in SigComp when an ASP for closing the connection is received. The SS shall also clean all states in the SigComp when abortion of a test case is detected or after the system reboots. If decompression failure occurs while decompressing a message, the message shall be discarded. The SigComp entity in the SS shall automatically find if a secure port or un-secure port is being used for transmission or reception of messages. If an un-secure port is used for transmission, it shall not include state creation instructions. If the state creation command is received in a compressed message on an un-secured port, a decompression failure shall be generated.

4.2.5.3 SIP TTCN-3 Codec

SIP is a text-based protocol, the messages exchanged between the UE and the SS are character strings. In TTCN-3 the messages are structured to take the advantages of TTCN-3 functionalities, and to make the debugging and maintenance easier.

Even though there is no encoding/decoding of SIP messages at the TTCN-3 system interface, the IMS_PTC uses the SIP codec by means of the TTCN-3 build-in functions encvalue and decvalue.

The SIP codec is specified in TS 34.229-3 [45] clause 7.

4.2.6 Support of DSMIPv6

For testing of DSMIPv6 IP packets being relevant for the test cases may be routed by the IP_PTC to the PTCs with specific test case implementation. There are not specific requirements for the system interface.

The functions of HA and ePDG are FFS.

4.2.7 MBMS test model

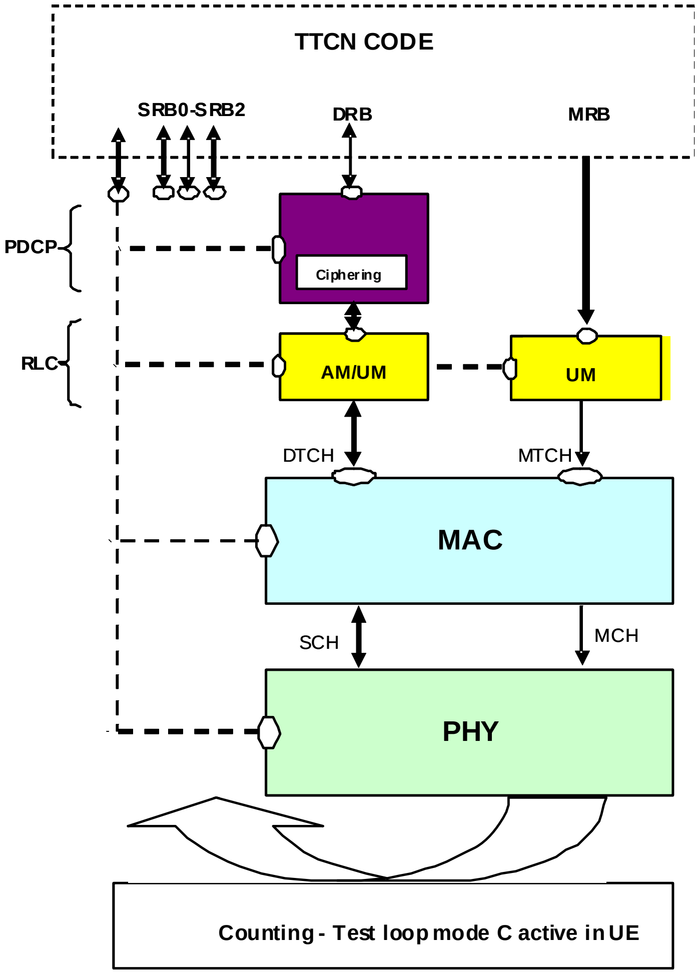

Figure 4.2.7-1: Test model for MBMS testing

The UE is configured in Test Loop Mode C to count the successfully received MBMS Packets. On the UE side, Ciphering/Integrity (PDCP and NAS) are enabled on SRBs/DRB. No security is configured on MCCH/MTCH.

On the SS side, the cell is configured as a normal cell, the MBMS parameters are configured by using an additional call of SYSTEM_CTRL_REQ. L1, MAC and RLC are configured for MCCH/MTCH in normal mode; they shall perform all of their functions. The MRB ports are above RLC. For MTCH data transmission, the SS shall set the MCH Scheduling Information (MSI) in the MAC PDU in the first subframe allocated to the MCH within the MCH scheduling period to indicate the position of each MTCH and unused subframes on the MCH according to TS 36.321[16] clause 6.1.3.7 The SS will be explicitly configured by the TTCN for MSI MAC control element. SS shall repeat the same configured MSI in the first subframe allocated to the MCH within each new MCH scheduling period.

The MRB data is considered as raw data and is scheduled with explicit timing control information from TTCN on MTCH.

4.3 SAE Test Model

4.3.1 NAS Test Model

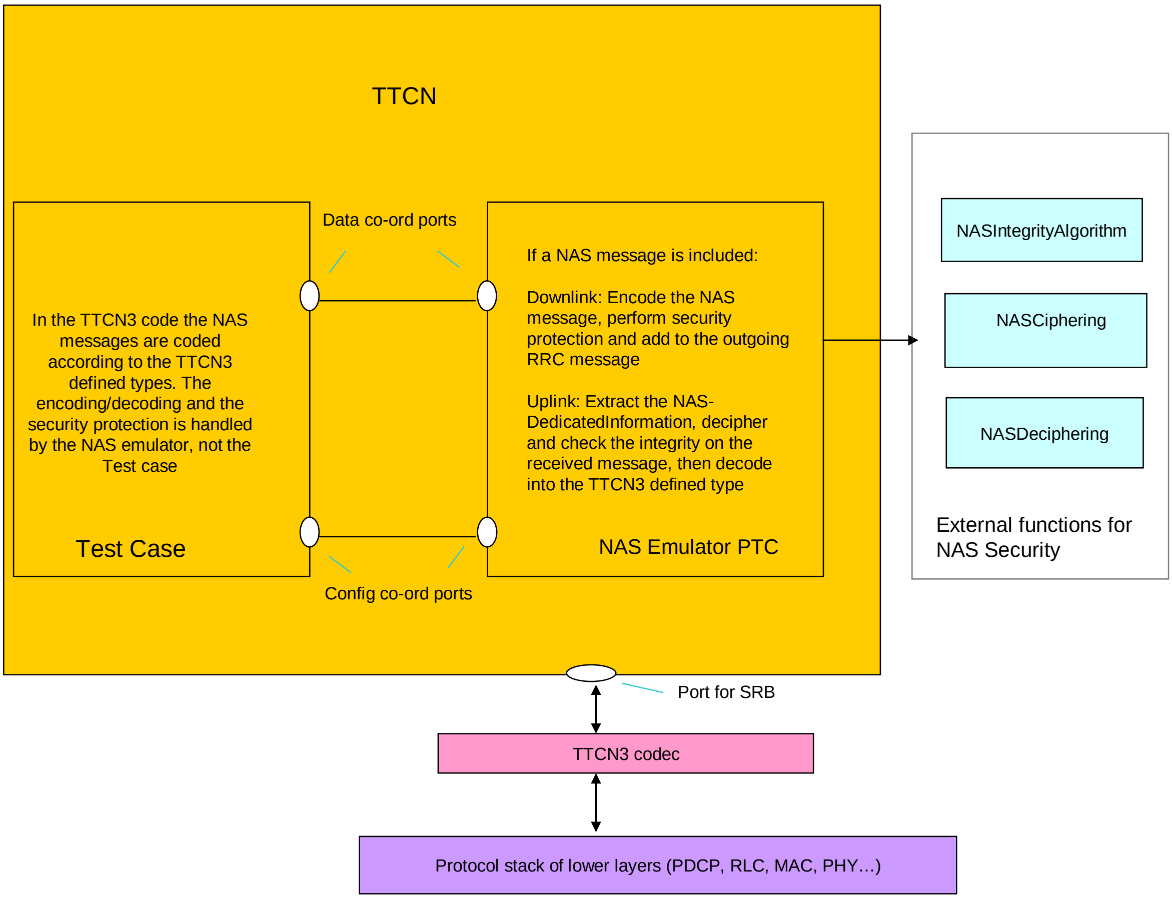
TTCN
Data co-ord ports
In the TTCN3 code the NAS messages are coded according to the TTCN3 defined types. The encoding/decoding and the security protection is handled by the NAS emulator, not the Test case
Test Case
If a NAS message is included:
Downlink: Encode the NAS message, perform security protection and add to the outgoing RRC message
Uplink: Extract the NAS-DedicatedInformation, decipher and check the integrity on the received message, then decode into the TTCN3 defined type
NAS Emulator PTC
Config co-ord ports
NASIntegrityAlgorithm
NASCiphering
NASDeciphering
External functions for NAS Security
Port for SRB
TTCN3 codec
Protocol stack of lower layers (PDCP, RLC, MAC, PHY…)

Figure 4.3.1-1: NAS Test Model

The NAS emulator is a parallel test component which handles NAS security, with the help of external functions to perform the integrity and (de)ciphering.

The interface between the emulator and the TTCN (co-ordination messages) handle data as TTCN-3 values. The interface between the emulator and the SS handles the RRC messages as TTCN-3 values, containing (where applicable) secure, encoded NAS messages.

The NAS emulator is not part of the test case in terms of verdict assignment (i.e. it does not check the correctness of any protocol message). Nevertheless, in case of fatal errors such as encode/decode errors, the NAS emulator sets the verdict to inconclusive and terminates immediately - which causes the test case to terminate. I.e. the NAS emulator does not resolve error situations.

4.4 Inter RAT Test Model

4.4.1 E-UTRAN-UTRAN Inter RAT Test Model

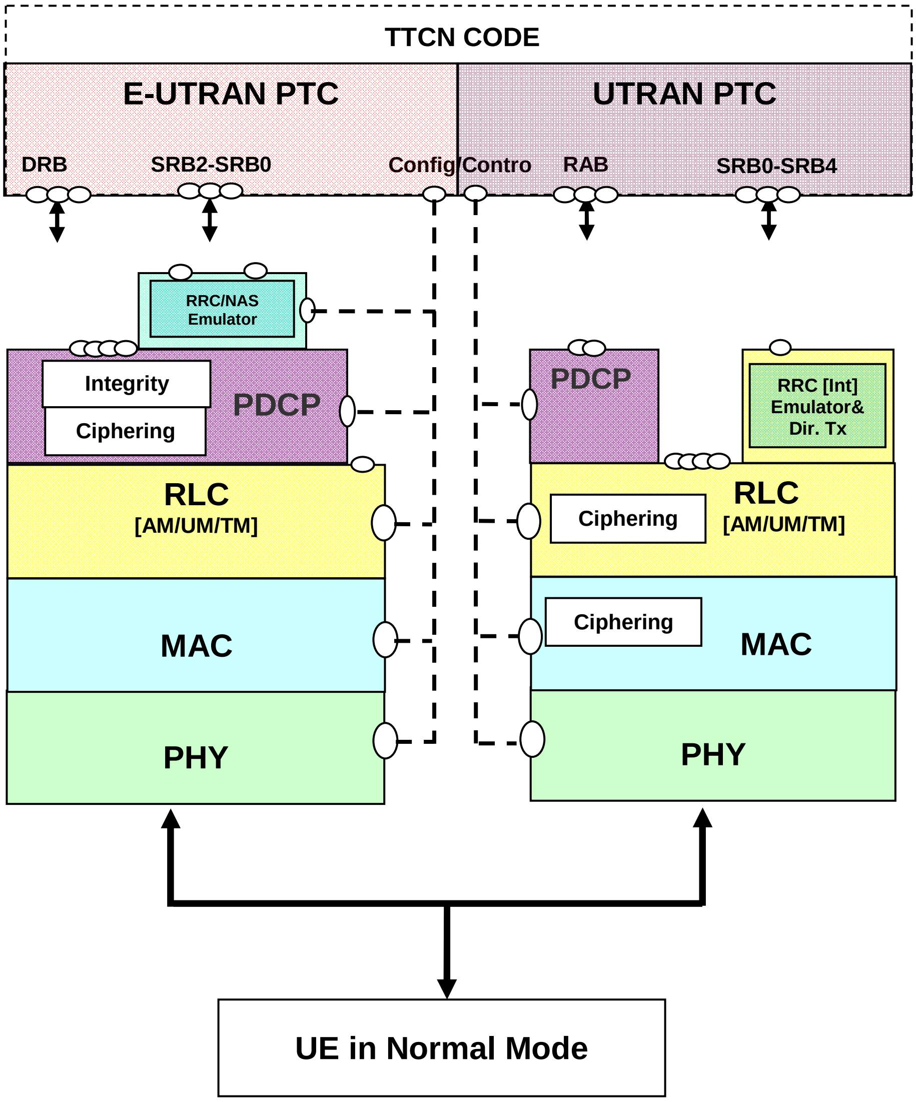
TTCN CODE
E-UTRAN PTC
UTRAN PTC
DRB
SRB2-SRB0
Config/Contro
RAB
SRB0-SRB4
RRC/NAS Emulator
Integrity
Ciphering
PDCP
RLC
[AM/UM/TM]
MAC
PHY
PDCP
RRC [Int] Emulator& Dir. Tx
Ciphering
RLC
[AM/UM/TM]
Ciphering
MAC
PHY
UE in Normal Mode

Figure 4.4.1-1: Test model for Inter RAT E-UTRAN-UTRAN testing

The model consists of dual protocol stack one for E-UTRAN and one for UTRAN. The TTCN implementation for E-UTRAN and UTRAN functionalities will be in separate Parallel Test Components. The SS E-UTRAN part is same as the model defined in clause 4.2.2 for RRC testing.

The SS UTRAN part consisting of PHY, MAC, RLC and PDCP (optionally) (IF PS user RB established only), are configured in normal mode. They shall perform all of their functions normally. Ciphering is enabled and shall be performed in RLC (AM/UM) and MAC (TM RLC). Integrity is enabled, and SS shall provide RRC emulator for integrity protection calculation and checking and 'Direct transfer' adaptation. Ports are above RLC (CS RAB and SRB0), PDCP (PS RAB) and RRC Emulator (SRB1 to SRB4).

The UE is configured in normal mode. Ciphering/Integrity (PDCP and NAS) are enabled and ROHC is not configured in E-UTRAN. Ciphering is enabled in UTRAN.

4.4.1.1 User data over UTRAN

User data transferred over UTRAN is distinguished between:

Raw user data (raw mode),

IP data (IP mode).

Depending upon whether the user data is relevant for the purpose of test, several scenarios are listed:

Raw user data relevant for the purpose of test,

IP data relevant for the purpose of test,

IP data, considered as IP signalling, not directly relevant for the purpose of test.

4.4.1.1.1 Raw user data over UTRAN

The raw user data can be as RLC SDUs and PDCP SDUs. The DL and UL user data are routed to UTRAN_PTC (Fig. 4.4.1.1.2-1). The IP stack in SS is not involved for all raw user data applications.

RLC SDUs is applied if the test loop mode 1 with loopback of RLC SDUs in TS 34.109 [9] is activated. PDCP in SS is not configured in this case; the DL and UL user data are routed to UTRAN_PTC via the RLC port.

The raw user data as PDCP SDUs is applied in the following cases:

the test loop mode 4 (TS 34.109 [9]) is activated,

the test loop mode 1 is activated with loopback of PDCP SDUs (TS 34.109 [9]),

the test loop mode B (TS 36.509 [4]) is activated and raw data is looped back on UTRAN,

IP raw data is another type of raw user data. The test loop mode is not activated. This case is applied when sending uplink data is triggered by the upper tester.

PDCP and optional RoHC are configured in SS, the DL and UL user data are routed to UTRAN_PTC via the PDCP port.

Feeding raw user data is largely used in the pure UTRAN test in TS 34.123-3 [7].

4.4.1.1.2 IP data over UTRAN

The IP data over UTRAN is applied to E-UTRA-UTRAN I-RAT and UTRAN test cases. The IP stack in SS is involved. IP data is considered as:

IP packets data (IP mode) relevant for the purpose of test,

IP signalling (IP mode), to be handled in TTCN at IP Layer

One of the IP signalling handling is the stateless address auto configuration for IPv6, illustrated in Fig. 4.4.1.1.2-1.

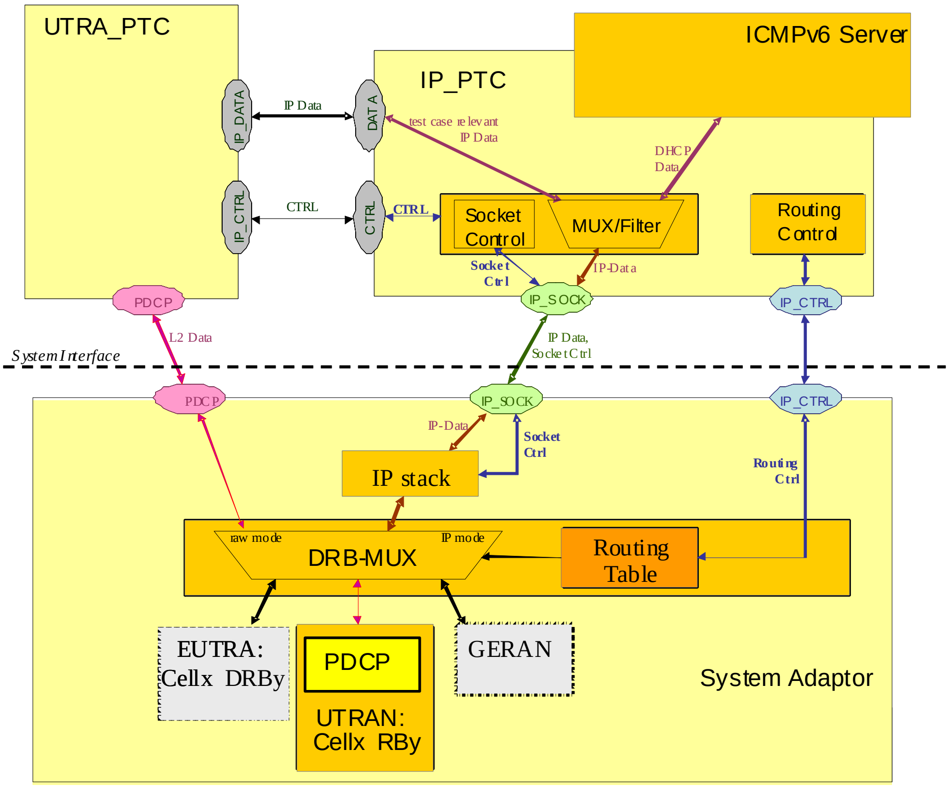
UTRA_PTC
ICMPv6 Server
IP_PTC
IP_DATA
IP Data
DATA
test case relevant IP Data
DHCP Data
IP_CTRL
CTRL
CTRL
CTRL
Socket Control
MUX/Filter
Routing Control
Socket Ctrl
IP-Data
PDCP
IP_SOCK
IP_CTRL
L2 Data
IP Data, Socket Ctrl
System Interface
PDCP
IP_SOCK
IP_CTRL
IP-Data
Socket Ctrl
Routing Ctrl
IP stack
raw mode
IP mode
DRB-MUX
Routing Table
EUTRA: Cellx DRBy
PDCP
UTRAN: Cellx RBy
GERAN
System Adaptor

Figure 4.4.1.1.2-1: UTRAN IP test model with an ICMPv6 server

4.4.1.1.3 Routing IP data

The routing of user data is the function of DRB-Mux and controlled by a routing table.

If there is no entry in the routing table for a given RB, it is considered being in raw mode, raw user data is routed to or from the UTRAN PDCP port.

If there is an entry in the routing table for a given RB, it is considered being in IP mode, IP data is routed to or from the IP stack.

For EUTRA-UTRAN or UTRAN test, the routing entry parameters in the DRB-Mux's routing table are specified as (RAT=Utran, cell-id=-1, RB id). SS PDCP entity does not belong to a particular cell; the cellId shall be assigned to the value -1. Consequently, the UTRAN cell id provided in DRB-Mux is set to cell-id=-1.

IP protocol information of IP data (protocol, local IP address, local port, remote IP address, and remote port) is also provided in the routing table. More information can be found in 4.2.4.

4.4.2 E-UTRAN-GERAN Inter RAT Test Model

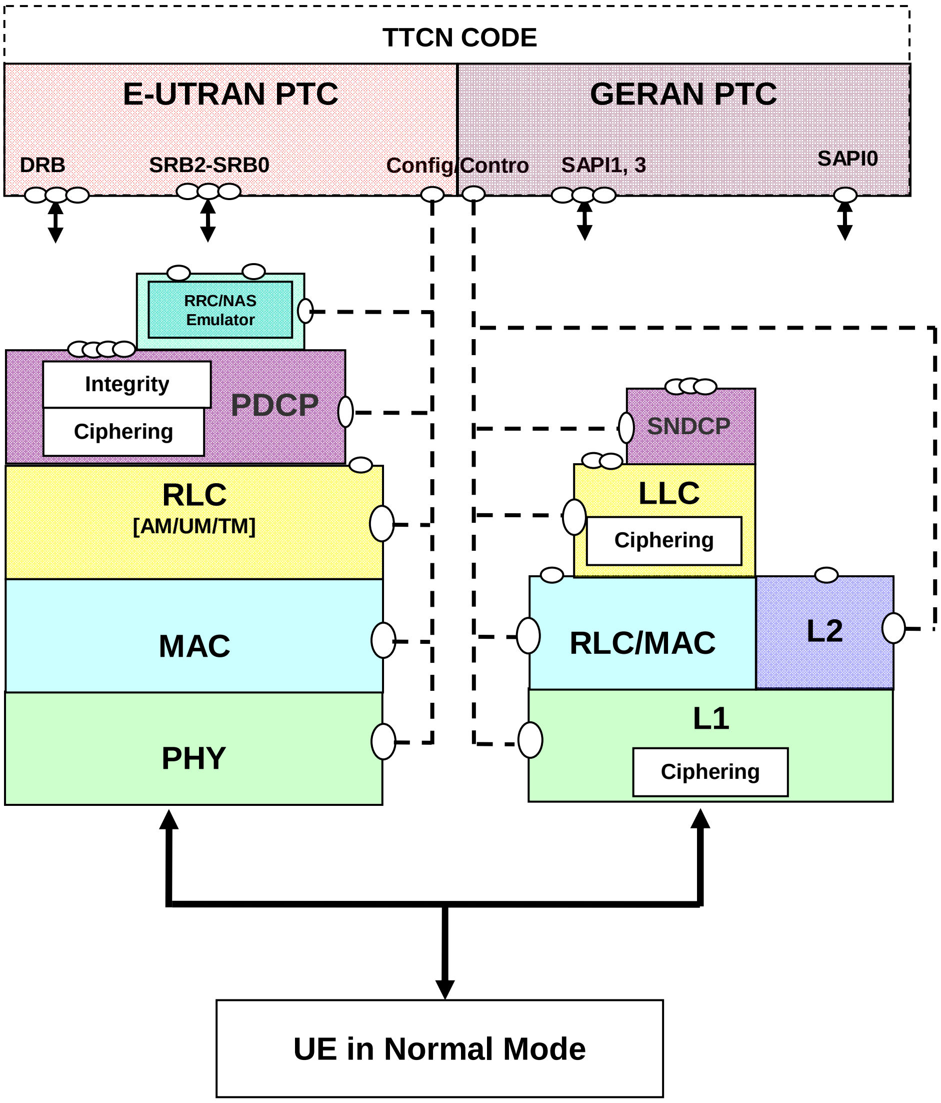
TTCN CODE
E-UTRAN PTC
GERAN PTC
DRB
SRB2-SRB0
Config
Contro
SAPI1, 3
SAPI0
RRC/NAS Emulator
Integrity
Ciphering
PDCP
RLC
[AM/UM/TM]
MAC
PHY
SNDCP
LLC
Ciphering
RLC/MAC
L2
L1
Ciphering
UE in Normal Mode

Figure 4.4.2-1: Test model for Inter RAT E-UTRAN-GERAN testing

The model consists of dual protocol stack one for E-UTRAN and one for GERAN. The TTCN implementation for E-UTRAN and GERAN functionalities will be in separate Parallel Test Components. The SS E-UTRAN part is the same as the model defined in clause 4.2.2 for RRC testing.

The SS GERAN model for GPRS consists of L1, MAC/ RLC and LLC, configured in normal mode. SNDCP may also be configured. If SNDCP is configured, this shall reference the LL Entity by the LLMEId. They shall perform all of their functions normally. Ciphering is enabled and shall be performed in LLC. XIDs shall be sent/received by the TTCN and the TTCN will then send the XID information to the SS using the G_CLLC_XID_Config_REQ ASP. Ports are above RLC (GRR messages), LLC (NAS and Data) and SNDCP (User Data).

The SS GERAN model for GSM consists of L1, L2 (MAC/ RLC), configured in normal mode. They shall perform all of their functions normally. Ciphering is enabled and shall be performed in L1. Ports are above L2.

The UE is configured in normal mode. Ciphering/Integrity (PDCP and NAS) are enabled and ROHC is not configured in E-UTRAN. Ciphering is enabled in GERAN.

4.4.2.1 User data over GERAN

User data transferred over GERAN is distinguished between:

Raw user data (raw mode),

IP data (IP mode).

Depending upon whether the user data is relevant for the purpose of test, several scenarios are listed:

Raw user data relevant for the purpose of test,

IP data relevant for the purpose of test,

IP data, considered as IP signalling, not directly relevant for the purpose of test.

4.4.2.1.1 Raw user data over GERAN

The raw user data can be as RLC blocks and SNDCP SDUs. The DL and UL user data are routed to GERAN PTC (Fig. 4.4.2.1.2-1). The IP stack in the SS is not involved for all raw user data applications.

RLC blocks are applied if testloop mode B (TS 36.509 [4]) is activated and raw data is looped back on GERAN.

IP raw data is another type of raw data. The testloop mode is not activated. This case is applied when sending uplink data is triggered by the upper tester.

SNDCP and optionally RoHC are configured in the SS, DL and UL user data are routed to GERAN_PTC via the SNDCP port.

4.4.2.1.2 IP data over GERAN

The IP data over GERAN is applied to EUTRA – GERAN I-RAT test cases. The IP stack in the SS is involved. IP data is considered as:

- IP packets data (IP mode) relevant for the purpose of the test,
- IP signalling (IP mode), to be handled in the TTCN at IP layer.

One of the IP signalling handling is the stateless address auto configuration for IPv6, illustrated in Figure 4.4.2.1.2-1.

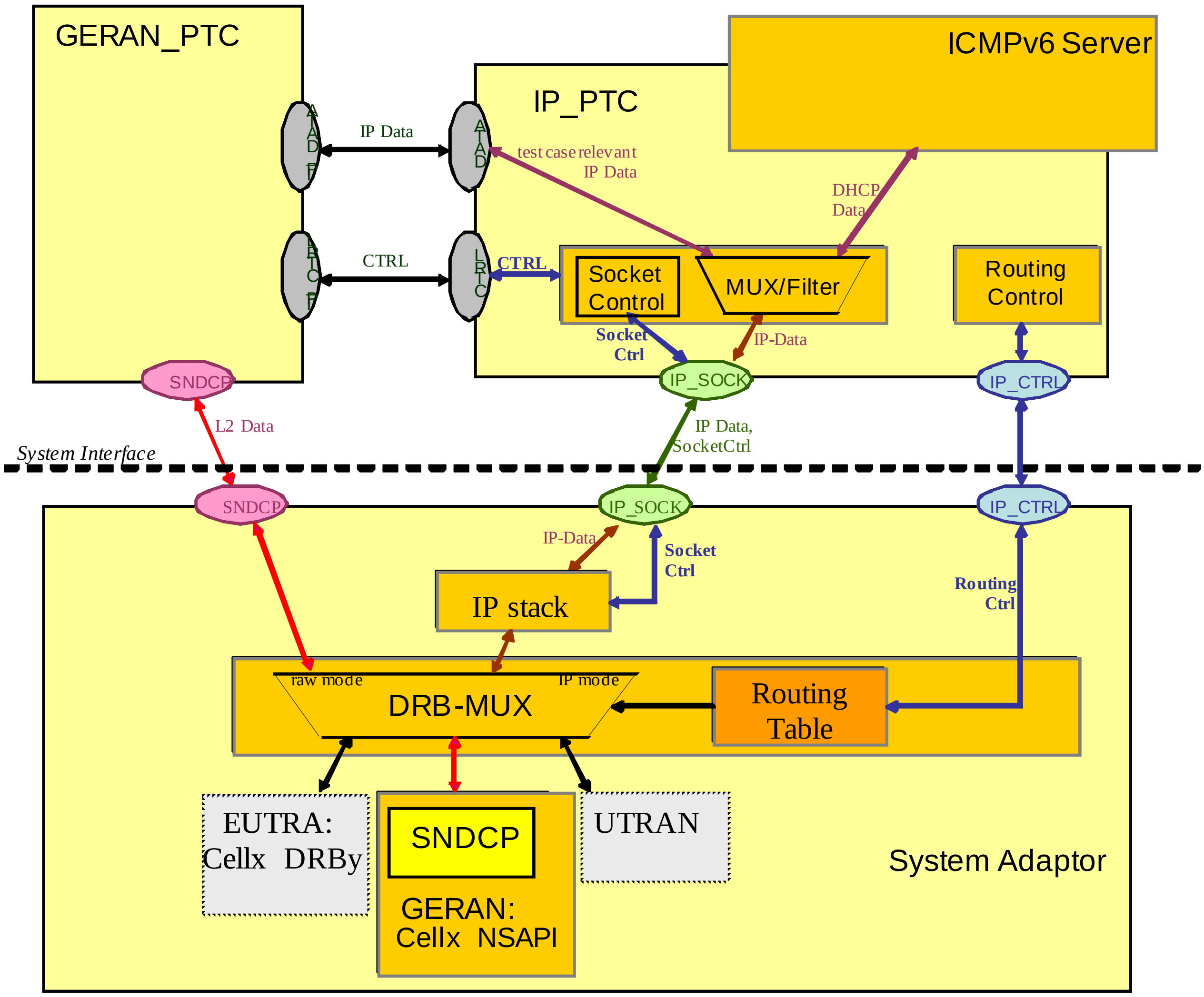
GERAN_PTC
ICMPv6 Server
IP_PTC
IP Data
test case relevant IP Data
DHCP Data
CTRL
CTRL
Socket Control
MUX/Filter
Routing Control
Socket Ctrl
IP-Data
SNDCP
IP_SOCK
IP_CTRL
L2 Data
IP Data, SocketCtrl
System Interface
SNDCP
IP_SOCK
IP_CTRL
IP-Data
Socket Ctrl
Routing Ctrl
IP stack
raw mode
IP mode
DRB-MUX
Routing Table
EUTRA: Cellx DRBy
SNDCP
GERAN: Cellx NSAPI
UTRAN
System Adaptor

Figure 4.4.2.1.2-1: GERAN IP test model with an ICMPv6 server

4.4.2.1.3 Routing IP data

The routing of user data is the function of the DRB-Mux and is controlled by a routing table.

If there is no entry in the routing table for a given NSAPI, it is considered to be in raw mode, raw user data is routed to or from the GERAN SNDCP port.

If there is an entry in the routing table for a given NSAPI, it is considered to be in IP mode, IP data is routed to or from the IP stack.

For EUTRA-GERAN, the routing entry parameters in the DRB-Mux's routing table are specified as (RAT = GERAN, cell-id, NSAPI). IP protocol information of IP data (protocol, local IP address, local port, remote IP address, and remote port) is also provided in the routing table. More information can be found in clause 4.2.4.

4.4.3 E-UTRAN-CDMA2000 Inter RAT Test Model

4.4.3.1 E-UTRAN-CDMA2000 HRPD Inter RAT Test Model

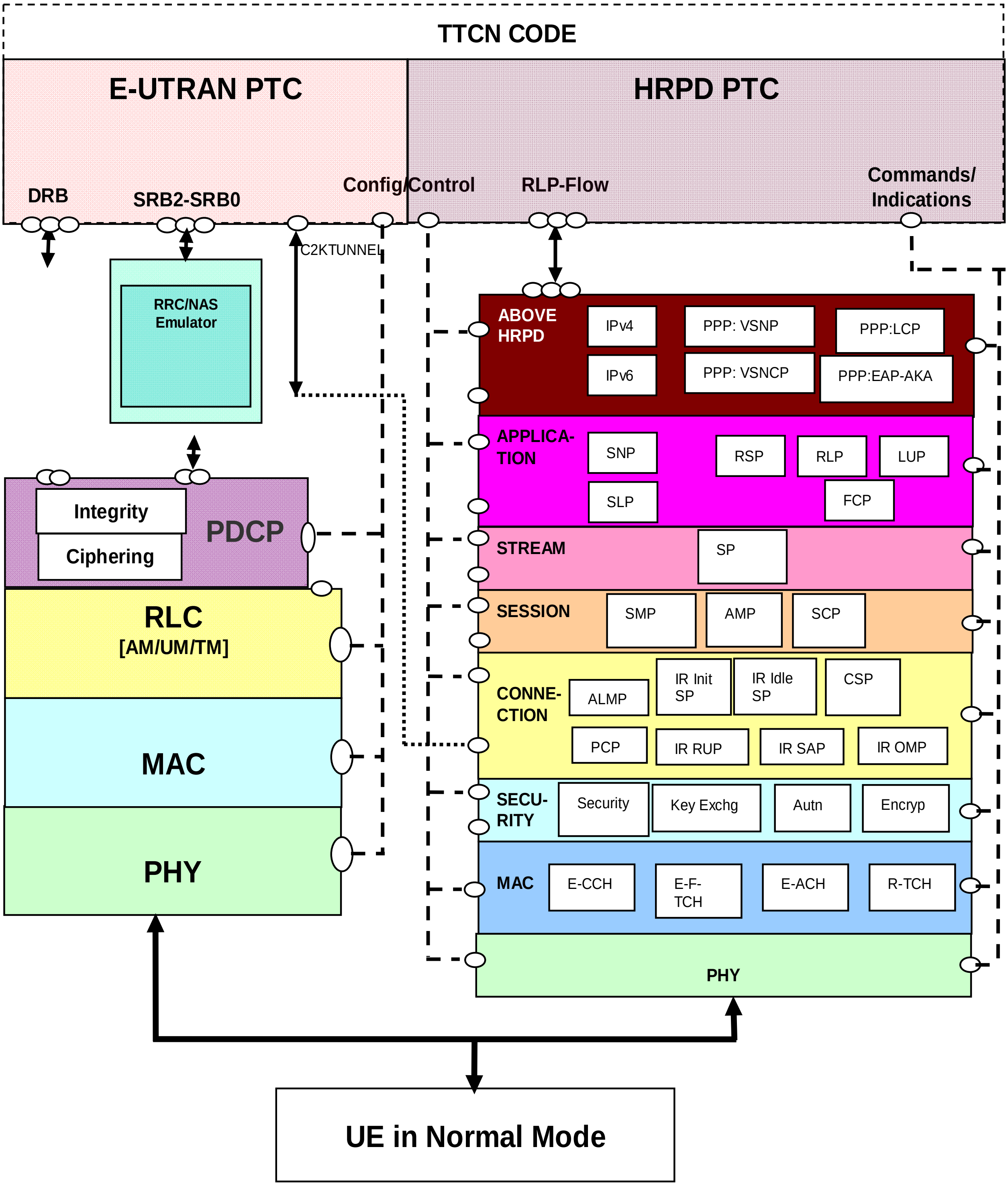
TTCN CODE
E-UTRAN PTC
HRPD PTC
DRB
SRB2-SRB0
Config/Control
RLP-Flow
Commands/ Indications
C2KTUNNEL
RRC/NAS Emulator
Integrity
Ciphering
PDCP
RLC [AM/UM/TM]
MAC
PHY
ABOVE HRPD
IPv4
IPv6
PPP: VSNP
PPP: VSNCP
PPP:LCP
PPP:EAP-AKA
APPLICA-TION
SNP
SLP
RSP
RLP
LUP
FCP
STREAM
SP
SESSION
SMP
AMP
SCP
CONNE-CTION
ALMP
IR Init SP
IR Idle SP
CSP
PCP
IR RUP
IR SAP
IR OMP
SECU-RITY
Security
Key Exchg
Autn
Encryp
MAC
E-CCH
E-F-TCH
E-ACH
R-TCH
PHY
UE in Normal Mode

Figure 4.4.3-1: Test model for InterRAT E-UTRAN-CDMA2000 HRPD testing

The model consists of a dual protocol stack, one for E-UTRAN and one for eHRPD. The TTCN implementation for E-UTRAN and eHRPD functionalities will be in separate Parallel Test Components. The SS E-UTRAN part is same as the model defined in clause 4.2.2 for RRC testing.

The eHRPD part emulation in SS is considered as a black box. The commands/Indications port is used for commanding the SS to bring the UE into the desired state and monitoring the progress. The System commands and indications are designed with principle of having minimum command/indication per eHRPD procedure hence avoid racing conditions and timing issues. By default, the execution order of sub procedures (e.g. protocol negotiations) cannot be monitored by TTCN. The SS emulations shall be compliant with respective 3GPP/3GPP2 core specifications and guarantee execution order of respective eHRPD procedures as per relevant 3GPP/3GPP2 test/core specifications.

The C2KTUNNEL port is used for routing encapsulated

1. pre-registration messages (i.e. messages encapsulated in *ULInformationTransfer* and *DLInformationTransfer)* in the EUTRAN cell to the eHRPD and
2. handover related eHRPD messages (i.e. messages encapsulated in *HandoverFromEUTRAPreparationRequest/ ULHandoverPreparationTransfer/ MobilityFromEUTRACommand).*

The SS eHRPD part consists of Physical, MAC, Security, Connection, Session, Stream, Application and Layers for PPP and IP configured in normal mode. They shall perform all of their functions normally. Encryption may be enabled and performed in security layer.

The CDMA2000 eHRPD emulation in the SS supports the following layers and protocols:

- Physical layer (Subtype 2).
- MAC layer:
  - Enhanced (Subtype 0, Subtype 1) Control Channel MAC Protocol (ECH).
  - Enhanced (Subtype 1) Forward Traffic Channel MAC Protocol (E-F-TCH).
  - Enhanced (Subtype 1) Access Channel MAC Protocol (E-ACH).
  - Subtype 3 Reverse Traffic Channel MAC Protocol (R-TCH).
- Security Layer:
  - Default Security Protocol (Security).
- Connection Layer:
  - Default Air Link Management Protocol (ALMP).
  - Default Connected State Protocol (CSP).
  - Default Packet Consolidation Protocol (PCP).
  - Inter-RAT Signalling Adaptation Protocol (IR-SAP) (required only for optimized handover).
  - Inter-RAT Initialization State Protocol (IR-Init SP) (required only for optimized handover).
  - Inter-RAT Idle State Protocol (IR-Idle SP) (required only for optimized handover).
  - Inter-RAT Route Update Protocol (IR-RUP) (required only for optimized handover).
  - Inter-RAT Overhead Messages Protocol (IR-OMP) (required only for optimized handover).
- Session Layer:
  - Default Session Management Protocol (SMP).
  - Default Address Management Protocol (AMP).
  - Default Session Configuration Protocol (SCP).
- Stream Layer:

    - Default Stream Protocol (DSP).
- Application Layer:
    - Default Signalling Application:
        - Signalling Network Protocol (SNP).
        - Signalling Link Protocol (SLP).
    - Enhanced Multi-Flow Packet Application:
        - Route Selection Protocol (RSP).
        - Radio Link Protocol (RLP).
        - Location Update Protocol (LUP).
        - Flow Control Protocol (FCP).
    - Alternate Enhanced Multi-Flow Packet Application (to be listed along with EMPA during SCP negotiation)
- Above eHRPD:
    - PPP: Vendor Specific Network Control Protocol (PPP:VSNCP).
    - PPP: Vendor Specific Network Protocol (PPP:VSNP).
    - PPP: Link Control Protocol (PPP:LCP).
    - PPP: Extensible Authentication protocol-Authentication and Key Agreement' (PPP:EAP-AKA').
    - IPv4.
    - IPv6.

During pre-registration phase, one cell per preRegistrationZoneID (ColorCode) to be simulated will be configured by TTCN with power level as 'off', or as specified by the test case. The SS will be issued System commands for pre-registration and expect the appropriate system indications.

The UE is configured in normal mode. Ciphering/Integrity (PDCP and NAS) are enabled and ROHC is not configured in E-UTRAN. Encryption is enabled in HRPD.

4.4.3.2 E-UTRAN-CDMA2000 1xRTT Inter RAT test model

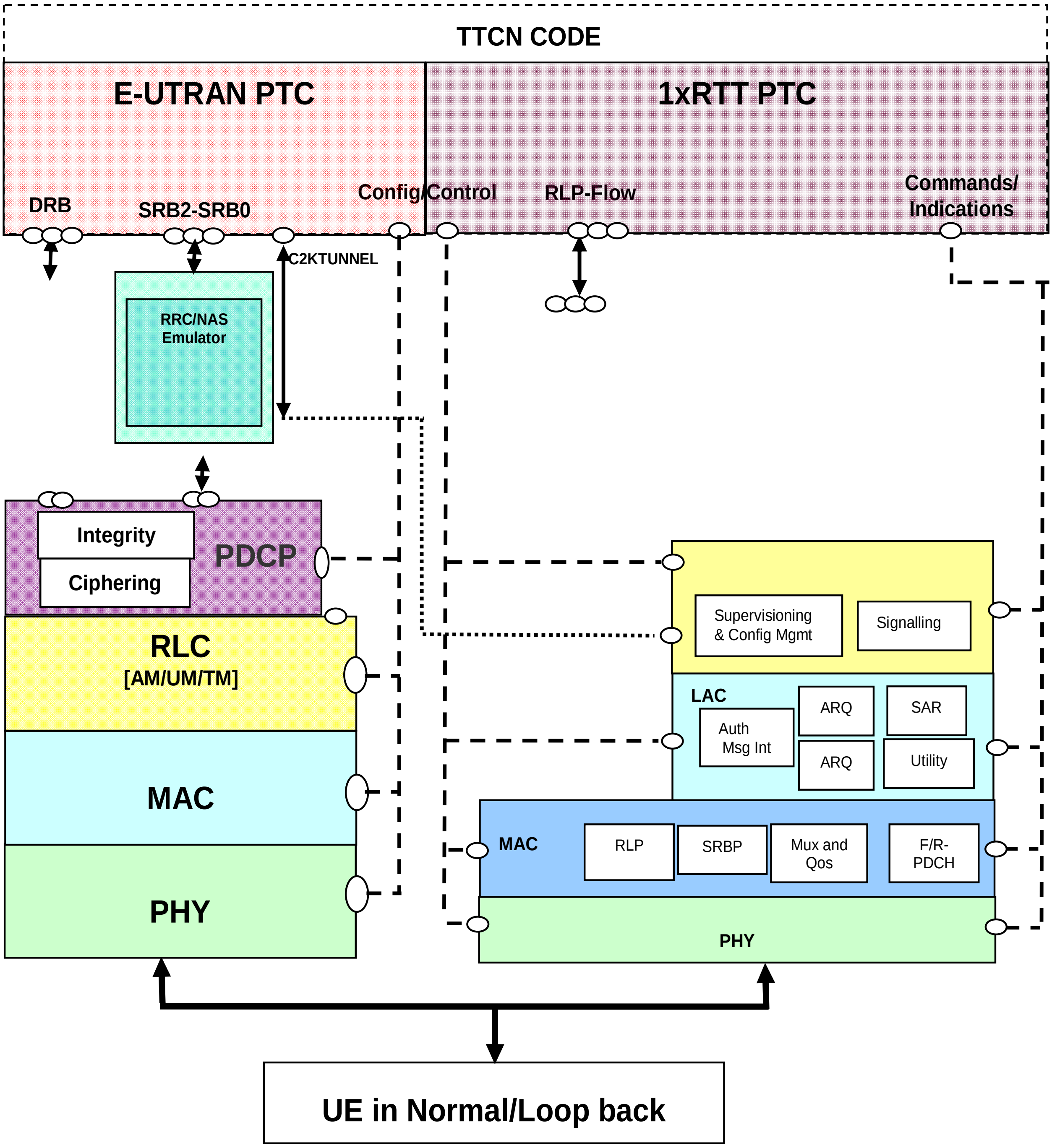
TTCN CODE
E-UTRAN PTC
1xRTT PTC
DRB
SRB2-SRB0
Config/Control
RLP-Flow
Commands/
Indications
C2KTUNNEL
RRC/NAS
Emulator
Integrity
Ciphering
PDCP
RLC
[AM/UM/TM]
MAC
PHY
Supervisioning
& Config Mgmt
Signalling
LAC
ARQ
SAR
Auth
Msg Int
ARQ
Utility
MAC
RLP
SRBP
Mux and
Qos
F/R-
PDCH
PHY
UE in Normal/Loop back

Figure 4.4.3.2-1: Test model for InterRAT E-UTRAN-CDMA2000 1xRTT testing

The 1xRTT test model consists of a dual protocol stack, one for E-UTRAN and one for 1xRTT. The TTCN implementation for E-UTRAN and 1xRTT functionalities are in separate Parallel Test Components. The SS E-UTRAN part is same as the model defined in clause 4.2.2 for RRC testing.

The 1xRTT part emulation in SS is considered as a black box. The commands/Indications port is used for commanding the SS to bring the UE into the desired state and monitoring the progress. The System commands and indications are designed with principle of having minimum command/indication per 1xRTT procedures hence avoid racing conditions and timing issues. By default, the execution order of sub procedures(e.g. protocol negotiations) cannot be monitored by TTCN. The SS emulations shall be compliant with respective 3GPP/3GPP2 core specifications and guarantee execution order of respective 1xRTT procedures as per relevant 3GPP/3GPP2 test/core specifications.

The C2KTUNNEL port is used for routing encapsulated

1. pre-registration messages (i.e. messages encapsulated in *CSFBParametersResponseCDMA2000, ULInformationTransfer* and *DLInformationTransfer)* in the EUTRAN cell to the 1xRTT and
2. handover, e-CSFB related 1xRTT messages (i.e. messages encapsulated in *HandoverFromEUTRAPreparationRequest/ ULHandoverPreparationTransfer/ MobilityFromEUTRACommand).*

The SS 1xRTT part consists of Physical, MAC, LAC, Session, Stream, Application and Layers for PPP and IP configured in normal mode. They shall perform all of their functions normally. Encryption may be enabled and performed in security layer.

The CDMA2000 1xRTT emulation in the SS supports the following layers and protocols:

- Physical layer.
- MAC layer:
  - Signalling Radio Burst protocol.
  - Radio Link Protocol for Data services.
  - Forward and Reverse Packet Data Channel functions.
  - Multiplexing and QoS Delivery.
- Link Access Control:
  - Authentication and Message Integrity sublayer [optional].
  - ARQ sublayer.
  - Addressing.
  - Utility.
  - Segmentation and Reassembly.
- Layer 3:
  - Super visioning and Configuration Management.
  - Signalling Protocol.

During pre-registration phase, one cell per preRegistrationZoneID (ColourCode) to be simulated will be configured by TTCN with power level as ‘off’, or as specified by the test case. The SS will be issued System commands for pre-registration and expect the appropriate system indications.

The UE is configured in normal mode or loop back mode. Ciphering/Integrity (PDCP and NAS) are enabled and ROHC is not configured in E-UTRAN. Encryption may be enabled in 1xRTT.

4.4.4 E-UTRAN FDD-TDD Inter RAT Test Model

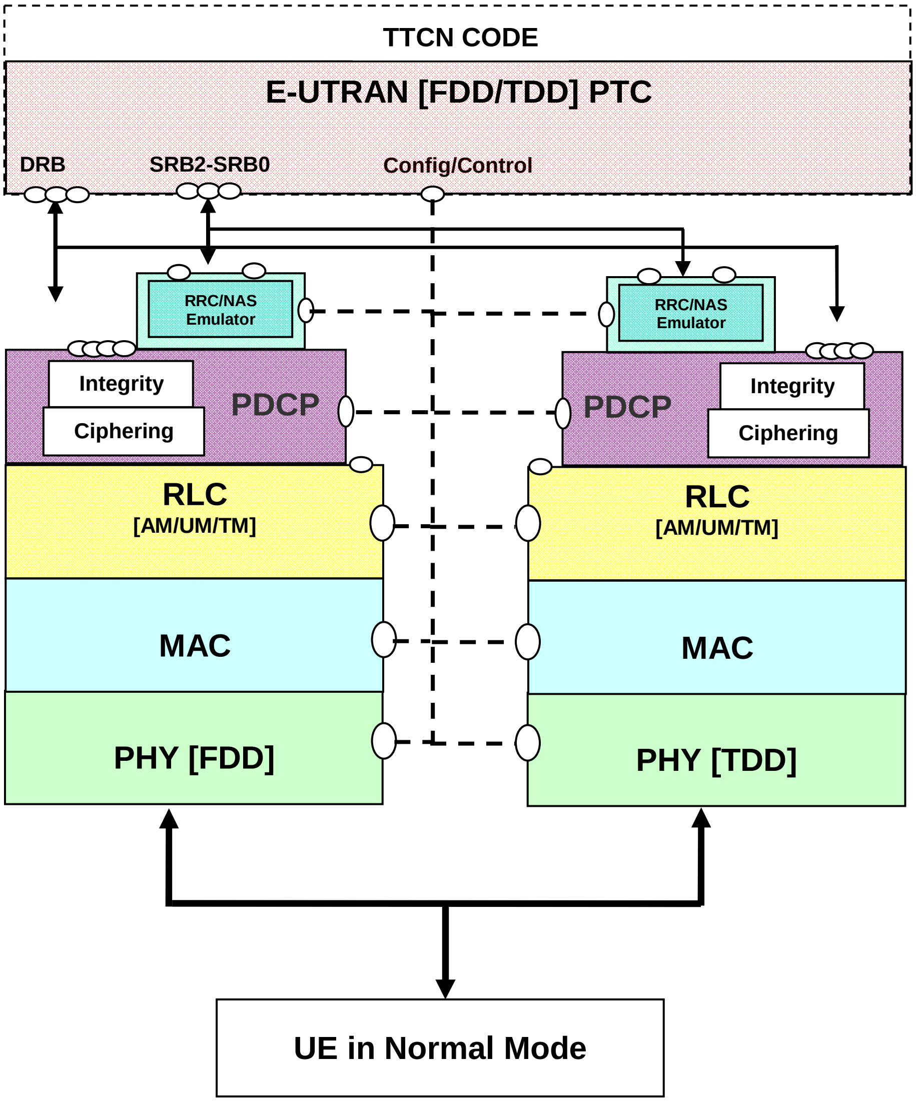
TTCN CODE
E-UTRAN [FDD/TDD] PTC
DRB
SRB2-SRB0
Config/Control
RRC/NAS Emulator
Integrity
Ciphering
PDCP
RLC
[AM/UM/TM]
MAC
PHY [FDD]
RRC/NAS Emulator
PDCP
Integrity
Ciphering
RLC
[AM/UM/TM]
MAC
PHY [TDD]
UE in Normal Mode

Figure 4.4.4-1: Test model for Inter RAT E-UTRANFDD-TDD testing

The model consists of dual protocol stack one for E-UTRANFDD and one for E-UTRANTDD. The TTCN implementation for E-UTRANFDD and TDD functionalities will be in the same Parallel Test Component. The SS E-UTRAN (both FDD and TDD) part is the same as the model defined in clause 4.2.2 for RRC testing. SS E-UTRANFDD and TDD shall be configured as separate cells.

The UE is configured in normal mode. Ciphering/Integrity (PDCP and NAS) are enabled and ROHC is not configured for both FDD and TDD.

4.4.5 E-UTRAN-UTRAN-GERAN Inter RAT Test Model

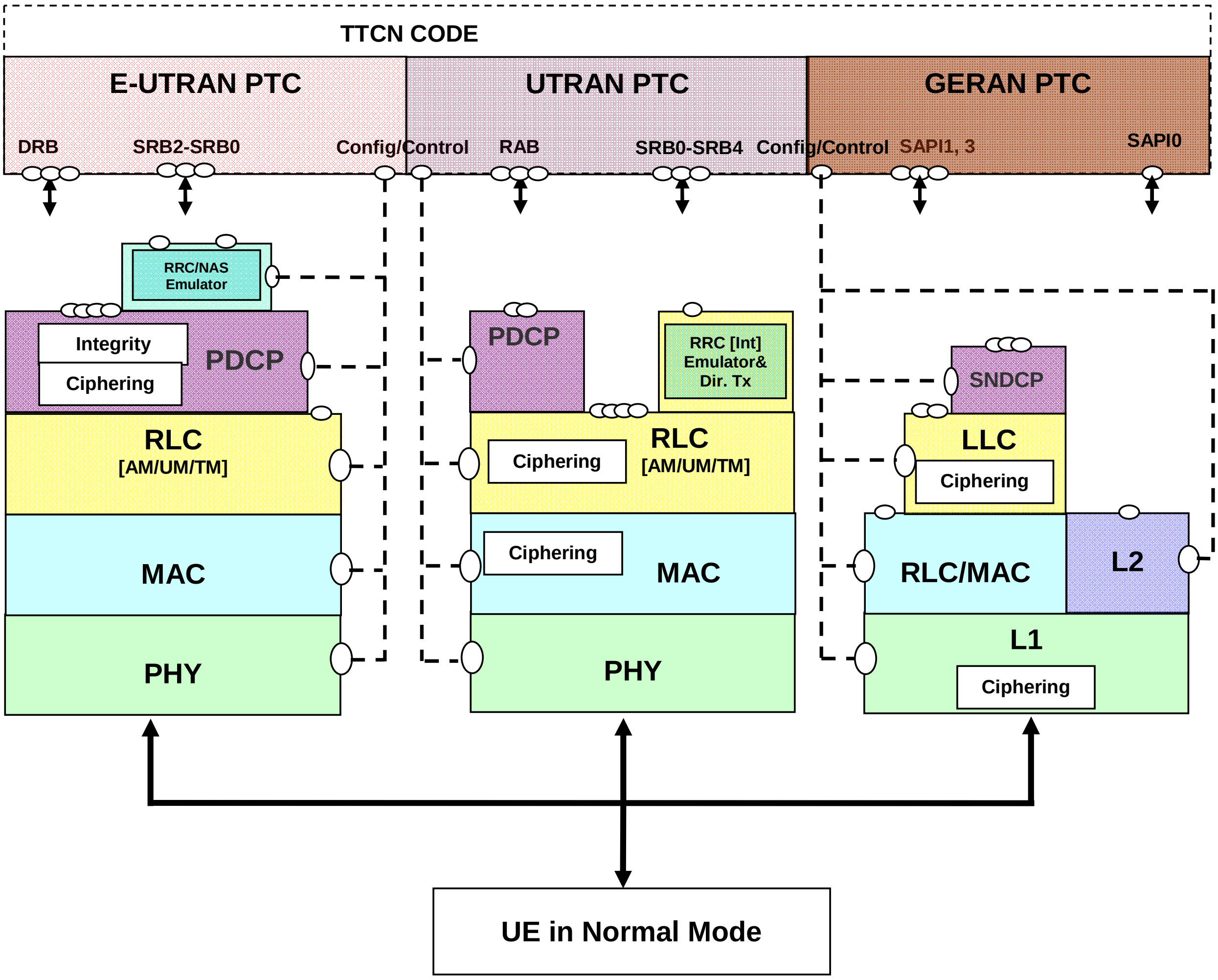
TTCN CODE
E-UTRAN PTC
UTRAN PTC
GERAN PTC
DRB
SRB2-SRB0
Config/Control
RAB
SRB0-SRB4
Config/Control
SAPI1, 3
SAPI0
RRC/NAS Emulator
Integrity
Ciphering
PDCP
RLC [AM/UM/TM]
MAC
PHY
PDCP
RRC [Int] Emulator& Dir. Tx
Ciphering
RLC [AM/UM/TM]
Ciphering
MAC
PHY
SNDCP
LLC
Ciphering
RLC/MAC
L2
L1
Ciphering
UE in Normal Mode

Figure 4.4.5-1: Test model for Inter RAT E-UTRANFDD-TDD testing

The model consists of integrated protocol stack supporting E-UTRAN, UTRAN and GERAN. The TTCN implementation for E-UTRAN, UTRAN and GERAN functionalities will be in separate Parallel Test Components. The SS E-UTRAN part is the same as the model defined in clause 4.2.2 for RRC testing. The SS UTRAN part is the same as the model defined in clause 4.4.1. The SS GERAN part is same as the model defined in clause 4.4.2.

The UE is configured in normal mode. Ciphering/Integrity (PDCP and NAS) are enabled and ROHC is not configured in E-UTRAN. Ciphering/Integrity are enabled in UTRAN. Ciphering is enabled in GERAN.

5 Upper Tester Interface

This clause describes the handling of AT commands and MMI Commands at the system interface. The internal handling of those commands in TTCN is out of scope.

In the TTCN, the Upper Tester is located at the MTC; therefore there is one interface to the system adaptor common for all RATs.

There is one primitive defined carrying either an MMI or an AT command to be sent to the system adaptor and one common confirmation primitive to be sent by the system adaptor.

TTCN-3 ASP Definition		
Type Name	**UT_SYSTEM_REQ**	
TTCN-3 Type	Record	
Cmd	**TTCN-3 Type**	union
AT	charstring carrying the AT command as defined in TS 27.007 [32], TS 27.005 [31] and TS 27.060 [33]	
MMI	• Cmd (charstring) • List of parameters: o Name (charstring) o Value (charstring)	
CnfRequired	**TTCN-3 Type**	Ut_CnfReq_Type
	CNF_REQUIRED: system adaptor shall reply with confirmation received from the UE **NO_CNF_REQUIRED:** SS shall swallow any confirmation generated by the UE **LOCAL_CNF_REQUIRED**: SS shall immediately send confirmation when the command is submitted to the UE i.e. in case of MMI when the operator has confirmed the command, but SS shall not wait for the UE responding. NOTE: In the TTCN, a confirmation shall only be requested in cases when there is no signalling from the UE being triggered by the MMI/AT command	

TTCN-3 ASP Definition		
Type Name	**UT_COMMON_CNF**	
TTCN-3 Type	Record	
Result	**TTCN-3 Type**	boolean
	true: success **false:** failure	
ResultString	**TTCN-3 Type**	charstring
	response by the UE for commands which request the UE to return a result, optional	

All mandatory and optional AT commands are sent as AT command strings as defined above. If an optional AT command is not implemented in the UE, the system adaptor needs to parse the AT command and map it to an appropriate MMI command (which is out of scope for this document).

The following MMI commands are defined.

Table 5.1: MMI commands

Command	Parameters	
	Name	Value
"SWITCH_ON"	(none)	
"SWITCH_OFF"	(none)	
"POWER_ON"	(none)	
"POWER_OFF"	(none)	
"INSERT USIM"	"USIM"	<USIM>
"REMOVE_USIM"	(none)	
"CHECK_PLMN"	"PLMN"	<PLMN ID>
"CHECK_ETWS_INDICATION"	“WARNING1”	<WARNING1>
	“WARNING2”	<WARNING2>
“CHECK_ETWS_ALERT”	(none)	
“CHECK_ETWS_NO_ALERT”	(none)	
"CHECK_CMAS_INDICATION"	“WARNING1”	<WARNING1>
	“WARNING2”	<WARNING2>
“CHECK_CMAS_ALERT”	(none)	
“CHECK_CMAS_NO_ALERT”	(none)	
"HRPD_PDN_CONNECTION”	(none)	
“CHECK_MESSAGE_DISPLAYED”	"Length"	<Length>
	"Msg"	<Msg>
“CHECK_SMS_LENGTH_CONTENTS"	"Length"	<Length>
	"Msg"	<Msg>
"DISABLE EPS CAPABILITY"	(none)	
"DETACH_NON_EPS"	(none)	
"CLEAR_STORED_ASSISTANCE_DATA"	(none)	
"CHECK_DTCH_THROUGHCONNECTED"	(none)	
"GERAN_UPLINK_DATA"	(none)	
"SELECT_CSG"	"PLMN"	<PLMN ID>
	"CSG"	< CSG ID >
“TRIGGER_USER_RESELECTION”	(none)	
"REQUEST_NON_CALL_RELATED_SS"	(none)	
“LOCATION_INFO”	(none)	
"MBMS_SERVICE_INTEREST"	"PLMN"	<PLMN ID>
	"Service"	<MBMS Service ID>
	"Interest"	<ON ; OFF>
"CHECK_ETWS_NO_INDICATION"	“WARNING1”	<WARNING1>
	“WARNING2”	<WARNING2>
"CHECK_CMAS_NO_INDICATION"	“WARNING1”	<WARNING1>
	“WARNING2”	<WARNING2>

The following AT commands are applied in TTCN.

Table 5.2: AT Commands

Command	Reference
ATD	TS 27.007 [32]
ATA	TS 27.007 [32]
ATH	TS 27.007 [32]
AT+CGEQOS	TS 27.007 [32]
AT+CGTFT	TS 27.007 [32]
AT+CGDSCONT	TS 27.007 [32]
AT+CGACT	TS 27.007 [32]
AT+CGCMOD	TS 27.007 [32]
AT+CGDCONT	TS 27.007 [32]
AT+CMGD	TS 27.005 [31]
AT+CSMS	TS 27.005 [31]
AT+CPMS	TS 27.005 [31]
AT+CMGF	TS 27.005 [31]
AT+CSCS	TS 27.007 [32]
AT+CSCA	TS 27.005 [31]
AT+CMGW	TS 27.005 [31]
AT+CMSS	TS 27.005 [31]
AT+CSMP	TS 27.005 [31]
AT+CGEQREQ	TS 27.007 [32]
AT+CCLK	TS 27.007 [32]
AT+COPS	TS 27.007 [32]
AT+CGATT	TS 27.007 [32]
AT+CVMOD	TS 27.007 [32]
AT+CEMODE	TS 27.007 [32]
AT+CEN	TS 27.007 [32]
AT+CLIP	TS 27.007 [32]
AT+CLIR	TS 27.007 [32]
AT+COLP	TS 27.007 [32]
AT+CCFCU	TS 27.007 [32]
AT+CHLD	TS 27.007 [32]
AT+CEPPI	TS 27.007 [32]

AT commands are referred to TS 27.005 [31], TS 27.007 [32] and TS 27.060 [33].

6 ASP specifications

6.1 General Requirements and Assumptions

The following common requirements affect ASP definitions:

- The definition of ASPs shall have no impact on the common system architecture or on the performance.
- The codec implementation is out of scope of the present document.
- For peer-to-peer PDUs contained in an ASP encoding rules need to be considered acc. to the respective protocol:
  - ASN.1 BER and PER.
  - Tabular notation for NAS PDUs or layer 2 data PDUs.

There are no encoding rules being defined for top level ASP definitions and information exchanged between the test executable and the System Adaptor (SA) only. Instead encoding depends on implementation of the codec and the SA.

There are no encoding rules being defined for ASPs between TTCN-3 components. This is implementation dependent.

Info elements defined in the protocol specifications (e.g. RRC) shall be re-used in configuration ASPs as far as possible.

For optional fields within the configuration ASPs, the following rules will be applied:

- For ASN.1 fields - these will follow the same rules as defined in the RRC specification [19].
- For TTCN-3 fields - when the current configuration of an optional field is to be 'kept as it is' then the field will be set to omit.
- For TTCN-3 fields - when the current configuration of an optional field is to be released/deleted then a separate option is provided in a union.

6.1.1 IP ASP requirements

6.1.2 Enhancement of IP ASP for handling IMS signalling

The IMS test model handling registration signalling introduces IPsec and SigComp layers into the IP test model in Figure 4.2.5.2-1. The ASP on system port IP_SOCK needs to be enhanced to provide additional configuration/control functions for IPsec and SigComp. The enhanced IP ASP should contain:

1. Function to clean all IPsec and SigComp configurations and to put the IPsec and SigComp in the initial state.
2. Function to return SigComp layer a Compartment Id instructing SigComp layer to save the state of a received message which was compressed.
3. Function to start or stop signalling compression in sending direction (the SS to the UE) of SigComp.
4. Function to set security parameters (per security association) in IPsec layer.
5. A flag indicating whether SigComp layer shall be included in the data path when establishing a connection.
6. A flag indicating whether the received message was compressed by SigComp.
7. A parameter to point to a compartment used by SigComp to send a message.

6.2 E-UTRAN ASP Definitions

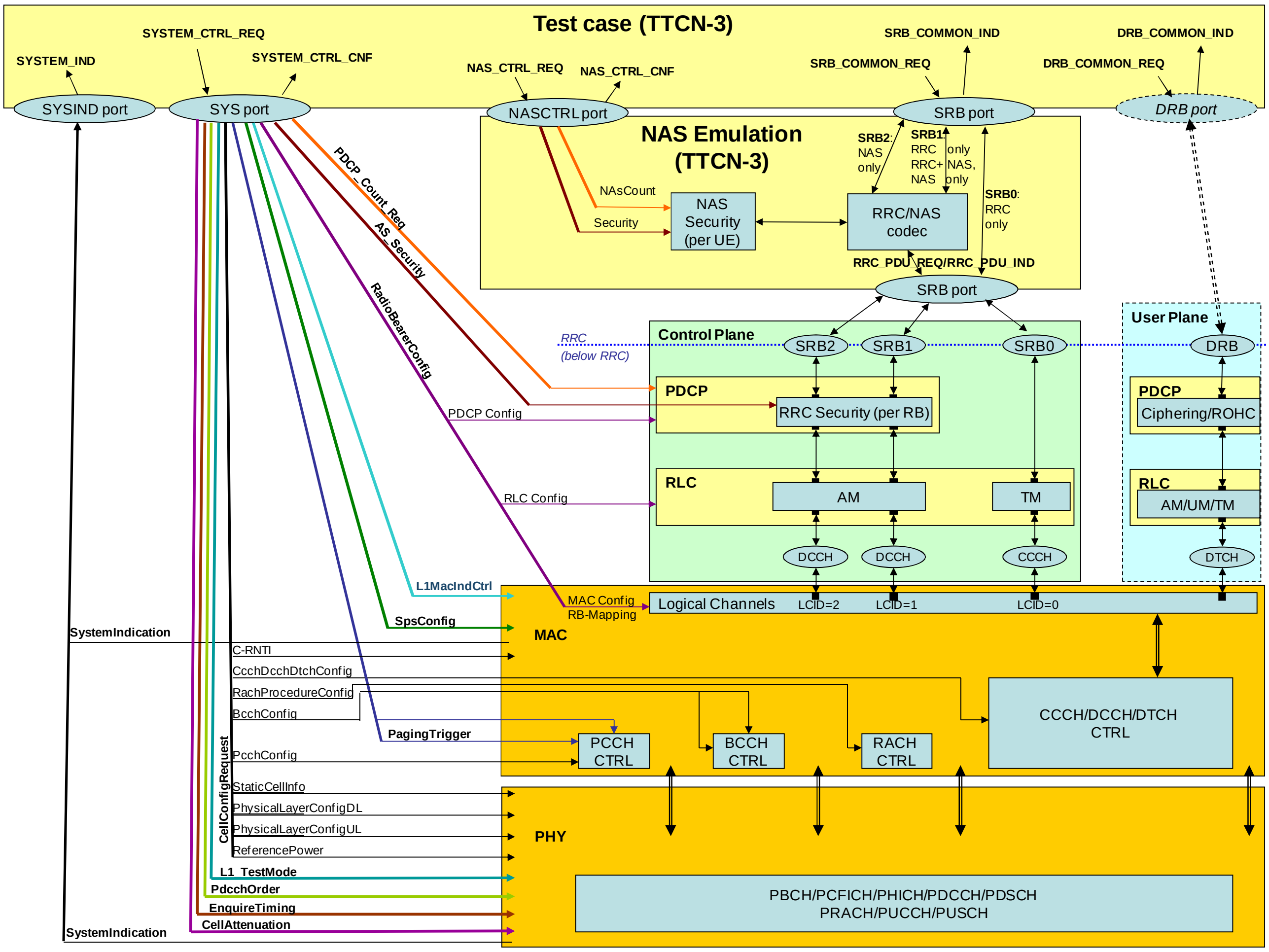
Test case (TTCN-3)
SYSTEM_IND
SYSTEM_CTRL_REQ
SYSTEM_CTRL_CNF
NAS_CTRL_REQ
NAS_CTRL_CNF
SRB_COMMON_REQ
SRB_COMMON_IND
DRB_COMMON_REQ
DRB_COMMON_IND
SYSIND port
SYS port
NASCTRL port
SRB port
DRB port
NAS Emulation (TTCN-3)
NAsCount
Security
NAS Security (per UE)
RRC/NAS codec
SRB2: NAS only
SRB1: RRC only RRC+ NAS, NAS only
SRB0: RRC only
RRC_PDU_REQ/RRC_PDU_IND
SRB port
PDCP_Count_Req
AS_Security
RadioBearerConfig
RRC (below RRC)
Control Plane
SRB2
SRB1
SRB0
User Plane
DRB
PDCP
RRC Security (per RB)
PDCP Config
PDCP
Ciphering/ROHC
RLC
AM
TM
RLC Config
RLC
AM/UM/TM
DCCH
DCCH
CCCH
DTCH
L1MacIndCtrl
SpsConfig
MAC Config
RB-Mapping
Logical Channels
LCID=2
LCID=1
LCID=0
MAC
SystemIndication
C-RNTI
CcchDcchDtchConfig
RachProcedureConfig
BcchConfig
PagingTrigger
PcchConfig
CCCH/DCCH/DTCH CTRL
PCCH CTRL
BCCH CTRL
RACH CTRL
CellConfigRequest
StaticCellInfo
PhysicalLayerConfigDL
PhysicalLayerConfigUL
ReferencePower
PHY
L1_TestMode
PdcchOrder
EnquireTiming
CellAttenuation
SystemIndication
PBCH/PCFICH/PHICH/PDCCH/PDSCH
PRACH/PUCCH/PUSCH

Figure 6.2-1: E-UTRAN ASP Test Model

6.2.1 Configuration Primitives

Annex D contains the ASP definitions for configurations.

6.2.2 Signalling Primitives

Annex D contains the ASP definitions for configurations.

6.2.3 Co-ordination Messages between NAS Emulation PTC and EUTRA PTC

TTCN-3 ASP Definition		
Type Name	**SRB_COMMON_REQ**	
TTCN-3 Type	Record	
Common Part	**TTCN-3 Type**	record
CellId	cell id	
RoutingInfo	SRB0, SRB1, SRB2	
TimingInfo	system frame number and sub-frame number or "Now"	
ControlInfo	CnfFlag: (normally false) FollowOnFlag: **true:** Indicates that the message(s) to be sent on the same TTI will follow NOTE 1: If the same TimingInfo is not used in the messages to be sent on the same TTI, the SS shall produce an error. **false:** Indicates that no more message(s) will follow.	
Signalling Part	**TTCN-3 Type**	record
Rrc	**TTCN-3 Type**	union
	omit: NAS message shall be present; NAS message shall be sent in DLInformationTransfer **present, NAS message present:** (piggybacked) NAS PDU shall be security protected (if necessary) and inserted in RRC PDU's NAS_DedicatedInformation **present, NAS message omit:** (RRC message does not contain NAS information)	
Ccch	DL_CCCH_Message as define in TS 36.331 [19], clause 6.2.1	
Dcch	DL_DCCH_Message as define in TS 36.331 [19], clause 6.2.1	
Nas	**TTCN-3 Type**	record
	omit: RRC message shall be present; RRC message does not contain (piggybacked) NAS PDU **present, RRC message omit:** NAS message shall be sent embedded in DLInformationTransfer **present, RRC message present:** NAS message is piggybacked in RRC message NOTE 2: In case of RRC message being sent on CCCH or does not have IE NAS_DedicatedInformation NAS message shall be omitted.	
SecurityProtectionInfo	security status (if protected with integrity and/or ciphering, if at all)	
NAS message	union of all NAS messages define for DL except SECURITY PROTECTED NAS MESSAGE	

TTCN-3 ASP Definition		
Type Name	**SRB_COMMON_IND**	
TTCN-3 Type	Record	
Common Part	**TTCN-3 Type**	record
CellId	cell id	
RoutingInfo	SRB0, SRB1, SRB2	
TimingInfo	system frame number; sub-frame number when PDU has been received	
Signalling Part	**TTCN-3 Type**	record
Rrc	**TTCN-3 Type**	union
	omit: NAS message shall be present; NAS message is received in ULInformationTransfer **present, NAS message present:** NAS_DedicatedInformation contains unstructured and security protected NAS PDU and the NAS message contains the deciphered message in structured format **present, NAS message omit:** (RRC message does not contain NAS information)	
Ccch	UL_CCCH_Message as define in TS 36.331 [19], clause 6.2.1	
Dcch	UL_DCCH_Message as define in TS 36.331 [19], clause 6.2.1	

TTCN-3 ASP Definition		
Nas	**TTCN-3 Type**	record
	omit RRC message shall be present; RRC message does not contain (piggybacked) NAS PDU **present, RRC message omit** NAS message has been received in ULInformationTransfer **present, RRC message present** NAS message is piggybacked in RRC message	
SecurityProtectionInfo	security status (if protected with integrity and/or ciphering, if at all), nas count	
NAS message	union of all NAS messages define for UL except SECURITY PROTECTED NAS MESSAGE	

TTCN-3 ASP Definition		
Type Name	**NAS_CTRL_REQ**	
TTCN-3 Type	Record	
Common Part	**TTCN-3 Type**	record
CellId	cell id	
RoutingInfo	(not used for configuration)	
TimingInfo	current system frame number; sub-frame number (always provided by the SS)	
Result	Success or error (in case of error an SS specific error code shall be provided; this will not be evaluated by TTCN but may be useful for validation)	
Primitive specific Part	**TTCN-3 Type**	union
Security	Start/Restart Integrity Ciphering NasCountReset Release	
NAS Count	get set	

TTCN-3 ASP Definition		
Type Name	**NAS_CTRL_CNF**	
TTCN-3 Type	Record	
Common Part	**TTCN-3 Type**	record
CellId	cell id	
RoutingInfo	(not used for configuration)	
TimingInfo	current system frame number; sub-frame number (always provided by the SS)	
Result	Success or error (in case of error an SS specific error code shall be provided; this will not be evaluated by TTCN but may be useful for validation)	
Primitive specific Part	**TTCN-3 Type**	union
Security	(contains no further information)	
NAS Count	get set	

6.3 UTRAN ASP Definitions

The UTRAN ASP definitions are specified according to 3GPP TS 34.123 [7], clause 6A.3.

6.3.1 Void

6.3.2 ASPs for Data Transmission and Reception

TTCN-3 ASP Definition		
Type Name	U_RLC_AM_REQ	
TTCN-3 Type	union	
Port	UTRAN_AM	
RLC_AM_DATA_REQ		TS 34.123-3, clause 7.3.2.2.34
RLC_AM_TestDataReq		TS 34.123-3, clause 7.3.3.1

TTCN-3 ASP Definition		
Type Name	U_RLC_AM_IND	
TTCN-3 Type	union	
Port	UTRAN_AM	
RLC_AM_DATA_CNF		TS 34.123-3, clause 7.3.2.2.34
RLC_AM_DATA_IND		TS 34.123-3, clause 7.3.2.2.34
RLC_AM_TestDataInd		TS 34.123-3, clause 7.3.3.1

TTCN-3 ASP Definition	**Port**	**Defined in**
UTRAN_RLC_AM_REQ	UTRAN_AM	TS 34.123-3, clause 7.3.2.2.34
UTRAN_RLC_AM_IND	UTRAN_AM	TS 34.123-3, clause 7.3.2.2.34
UTRAN_RLC_TR_REQ	UTRAN_TM	TS 34.123-3, clause 7.3.2.2.33
UTRAN_RLC_TR_IND	UTRAN_TM	TS 34.123-3, clause 7.3.2.2.33
UTRAN_RLC_UM_REQ	UTRAN_UM	TS 34.123-3, clause 7.3.2.2.35
UTRAN_RLC_UM_IND	UTRAN_UM	TS 34.123-3, clause 7.3.2.2.35
RRC_DataReq	UTRAN_Dc	TS 34.123-3, clause 7.1.2
RRC_DataReqInd	UTRAN_Dc	TS 34.123-3, clause 7.1.2

The Invalid_DL_DCCH_Message type is replaced with:

Type Name	**Invalid_DL_DCCH_Message**
TTCN-3 Type	NULL

6.4 GERAN ASP Definitions

6.4.1 ASPs for Control Primitive Transmission

TTCN-3 ASP Definition	
Type Name	**G__CPHY_CONFIG_REQ**
TTCN-3 Type	Union
Port	GERAN_CL1
G_CL1_CreateCell_REQ	TS 34.123-3, clause 7.3.4.3.2.1
G_CL1_DeleteCell_REQ	TS 34.123-3, clause 7.3.4.3.2.1
G_CL1_CreateBasicPhyCh_REQ	TS 34.123-3, clause 7.3.4.3.2.1
G_CL1_CreateMultiSlotConfig_REQ	TS 34.123-3, clause 7.3.4.3.2.1
G_CL1_DeleteChannel_REQ	TS 34.123-3, clause 7.3.4.3.2.1
G_CL1_ChangePowerLevel_REQ	TS 34.123-3, clause 7.3.4.3.2.1
G_CL1_CipheringControl_REQ	TS 34.123-3, clause 7.3.4.3.2.1
G_CL1_CipherModeModify_REQ	TS 34.123-3, clause 7.3.4.3.2.1
G_CL1_ChModeModify_REQ	TS 34.123-3, clause 7.3.4.3.2.1
G_CL1_ComingFN_REQ	TS 34.123-3, clause 7.3.4.3.2.1
G_CL2_HoldPhyInfo_REQ	TS 34.123-3, clause 7.3.4.3.2.2
G_CL1_L1Header_REQ	TS 34.123-3, clause 7.3.4.3.2.1
G_CL2_MeasRptControl_REQ	TS 34.123-3, clause 7.3.4.3.2.2
G_CL2_NoUAforSABM_REQ	TS 34.123-3, clause 7.3.4.3.2.2
G_CL2_ResumeUAforSABM_REQ	TS 34.123-3, clause 7.3.4.3.2.2
G_CL2_Release_REQ	TS 34.123-3, clause 7.3.4.3.2.2
G_CL1_SetNewKey_REQ	TS 34.123-3, clause 7.3.4.3.2.1

TTCN-3 ASP Definition	
Type Name	**G_CPHY_CONFIG_CNF**
TTCN-3 Type	Union
Port	GERAN_CL1
ComingFN	RFN
L1Header	L1Header
None	This choice used when neither of the other choices are selected

TTCN-3 ASP Definition	
Type Name	**G_CRLC_CONFIG_REQ**
TTCN-3 Type	Union
Port	GERAN_CRLC
G_CRLC_CreateRLC_MAC_REQ	TS 34.123-3, clause 7.3.4.3.2.3
G_CRLC_DeleteRLC_MAC_REQ	TS 34.123-3, clause 7.3.4.3.2.3
G_CRLC_DL_TBF_Config_REQ	TS 34.123-3, clause 7.3.4.3.2.3
G_CRLC_UL_TBF_Config_REQ	TS 34.123-3, clause 7.3.4.3.2.3

TTCN-3 ASP Definition	
Type Name	**G_CRLC_CONFIG CNF**
TTCN-3 Type	empty record
Port	GERAN_CRLC

TTCN-3 ASP Definition	
Type Name	G_CLLC_CONFIG_REQ
TTCN-3 Type	Union
Port	GERAN_CLLC
G_CLLC_Assign_REQ	TS 34.123-3, clause 7.3.4.3.2.4
G_CLLC_Reassign_REQ	TS 34.123-3, clause 7.3.4.3.2.4
G_CLLC_CreateLLE_REQ	TS 34.123-3, clause 7.3.4.3.2.4
G_CLLC_DeleteLLE_REQ	TS 34.123-3, clause 7.3.4.3.2.4

TTCN-3 ASP Definition	
Type Name	**G_CLLC_CONFIG_CNF**
TTCN-3 Type	empty record
Port	GERAN_CLLC

ASP Name	G_CSNDCP_Activate_REQ	
PCO Type	G_CSAP	
Comments	The ASP is used to activate the SNDCP entity	
Parameter Name	**Parameter Type**	**Comments**
sNDCPId	SNDCPId	The SNDCP entity identifier of the cell
lLMEId	LLMEId	Logical link management entity Id
nSAPI	integer	The Network Service Access Point Identifier
sAPI	SAPI	LLC SAPI
PCI_Compression	INTEGER	0 - RFC 1144 [54] compress; 1 - RFC 2507 [55] compression; 32 - no compression
dataCompression	INTEGER	0 - ITU-T Recommendation V.42bis [56] compression; 1 - ITU-T Recommendation V.44 [57] compression; 32 - no compression
nPDUNumberSync	INTEGER	0 - Asynchronous 1 - Synchronous
Detailed Comments		

ASP Name	G_CSNDCP_Activate_CNF	
PCO Type	G_CSAP	
Comments	The ASP is used to get the confirmation of a G_CSNDCP_Activate_REQ	
Parameter Name	**Parameter Type**	**Comments**
sNDCPId	SNDCPId	SNDCPentity identifier
nSAPI	NSAPI	The Network Service Access Point Identifier
Detailed Comments		

ASP Name	G_CSNDCP_Release_REQ	
PCO Type	G_CSAP	
Comments	This ASP is used to inform that the NSAPI is in use and the acknowledge mode peer to peer LLC operation for the requested SAPI is established.	
Parameter Name	**Parameter Type**	**Comments**
sNDCPId	SNDCPId	The SNDCP entity identifier
nSAPI	integer	The Network Service Access Point Identifier
Detailed Comments		

TTCN-3 ASP Definition	
Type Name	G_SNDCP_CONFIG_CNF
TTCN-3 Type	Record
Port	GERAN_CSNDCP

TTCN-3 ASP Definition	
Type Name	G_SNDCP_CONFIG_REQ
TTCN-3 Type	Union
Port	GERAN_CSNDCP
G_CSNDCP_Activate_REQ	
G_CSNDCP_Release_REQ	

ASP Name	G_CLLC_XID_Config_REQ	
PCO Type	G_CSAP	
Comments	The ASP is used to inform the SS of the XID information responded to the UE by TTCN	
Parameter Name	**Parameter Type**	**Comments**
lLMEId	LLMEId	
tLLI	TLLI	
sAPI	SAPI	
xID_Info	XID_Info	the XID parameters responded to the UE/MS
Detailed Comments		

6.4.2 ASPs for Data Transmission and Reception

TTCN-3 ASP Definition	
Type Name	**G__L2_DATAMESSAGE_REQ**
TTCN-3 Type	Union
Port	GERAN_L2
G_L2_UNITDATA_REQ	TS 34.123-3, clause 7.3.4.3.1.1
G_L2_Release_REQ	TS 34.123-3, clause 7.3.4.3.1.1
G_L2_SYSINFO_REQ	TS 34.123-3, clause 7.3.4.3.1.1
G_L2_Paging_REQ	TS 34.123-3, clause 7.3.4.3.1.1
G_L2_PagingGPRS_REQ	TS 34.123-3, clause 7.3.4.3.1.1
G_L2_DATA_REQ	TS 34.123-3, clause 7.3.4.3.1.1
G_L2_GTTP_REQ	TS 34.123-3, clause 7.3.4.3.1.1

The SysInfoType is replaced with:

Type Name	SysInfoMsg
TTCN-3 Type	Union
	SYSTEMINFORMATIONTYPE1
	SYSTEMINFORMATIONTYPE2
	SYSTEMINFORMATIONTYPE3
	SYSTEMINFORMATIONTYPE4
	SYSTEMINFORMATIONTYPE5
	SYSTEMINFORMATIONTYPE6
	SYSTEMINFORMATIONTYPE13
	SYSTEMINFORMATIONTYPE15
	SYSTEMINFORMATIONTYPE2bis
	SYSTEMINFORMATIONTYPE2ter
	SYSTEMINFORMATIONTYPE2quater
	SYSTEMINFORMATIONTYPE5bis

TTCN-3 ASP Definition	
Type Name	**G__L2_DATAMESSAGE_IND**
TTCN-3 Type	Union
Port	GERAN_L2
G_L2_UNITDATA_IND	TS 34.123-3, clause 7.3.4.3.1.1
G_L2_Release_CNF	TS 34.123-3, clause 7.3.4.3.1.1
G_L2_Release_IND	TS 34.123-3, clause 7.3.4.3.1.1
G_L2_Estab_IND	TS 34.123-3, clause 7.3.4.3.1.1
G_L2_GTTP_IND	TS 34.123-3, clause 7.3.4.3.1.1
G_L2_DATA_IND	TS 34.123-3, clause 7.3.4.3.1.1
G_L2_ACCESS_IND	TS 34.123-3, clause 7.3.4.3.1.1

TTCN-3 ASP Definition	
Type Name	**G__RLC_DATAMESSAGE_REQ**
TTCN-3 Type	Union
Port	GERAN_RLC
G__RLC_ControlMsg_REQ	TS 34.123-3, clause 7.3.4.3.1.2

TTCN-3 ASP Definition		
Type Name	**G__RLC_DATAMESSAGE_IND**	
TTCN-3 Type	Union	
Port	GERAN_RLC	
G__RLC_ControlMsg_IND		TS 34.123-3, clause 7.3.4.3.1.2

TTCN-3 ASP Definition		
Type Name	**G__LLC_DATAMESSAGE_REQ**	
TTCN-3 Type	Union	
Port	GERAN_LLC	
G_LLC_UNITDATA_REQ		TS 34.123-3, clause 7.3.4.3.1.3
G_LLC_XID_RES		TS 34.123-3, clause 7.3.4.3.1.3

ASP Name	G_LLC_NULL_IND	
PCO Type	G_DSAP	
Comments	The ASP is used to receive the LLC NULL frame, sent by the UE for Cell Update.	
Parameter Name	**Parameter Type**	**Comments**
lLMEId	LLMEId	
tLLI	TLLI	
sAPI	SAPI	
Detailed Comments		

TTCN-3 ASP Definition		
Type Name	**G__LLC_DATAMESSAGE_IND**	
TTCN-3 Type	Union	
Port	GERAN_LLC	
G_LLC_UNITDATA_IND		TS 34.123-3, clause 7.3.4.3.1.3
G_LLC_XID_IND		TS 34.123-3, clause 7.3.4.3.1.3
G_LLC_NULL_IND		

ASP Name	G_SN_UNIDATA_REQ	
PCO Type	G_DSAP	
Comments	The ASP is used to send a valid IP datagram on the specified NSAPI to the UE/MS by unacknowledged transmission.	
Parameter Name	**Parameter Type**	**Comments**
sNDCPId	SNDCPId	
nSAPI	integer	5 to 15
n_PDU	N_PDU	Valid IPv4 or IPv6 datagram
Detailed Comments	Unacknowledged transmission mode	

ASP Name	G_SN_UNITDATA_IND	
PCO Type	G_DSAP	
Comments	The ASP is used to receive an IP datagram on the specified NASPI from the UE/MS in unacknowledged transmission mode.	
Parameter Name	**Parameter Type**	**Comments**
sNDCPId	SNDCPId	
nSAPI	integer	5 to 15
n_PDU	N_PDU	IPv4 or IPv6 datagram
Detailed Comments	Unacknowledged transmission mode	

Type Name	SNDCPId
Type Definition	INTEGER
Type Encoding	
Comments	The identifier of the SNDCP entity in SGSN

TTCN-3 ASP Definition		
Type Name	G__SN_DATAMESSAGE_REQ	
TTCN-3 Type	Union	
Port	GERAN_SNDCP	
G_SN_UNITDATA_REQ		

TTCN-3 ASP Definition		
Type Name	**G__SN_DATAMESSAGE_IND**	
TTCN-3 Type	Union	
Port	GERAN_SNDCP	
G_SN_UNITDATA_IND		

7 Test Methods and Design Considerations

7.1 Channel Mapping

Figure 7.1 shows the channel type mapping that is used for the configuration of the SS. In layer 2 test cases non default channel mapping can be applied on SS, as explained in clause 4.2.1.

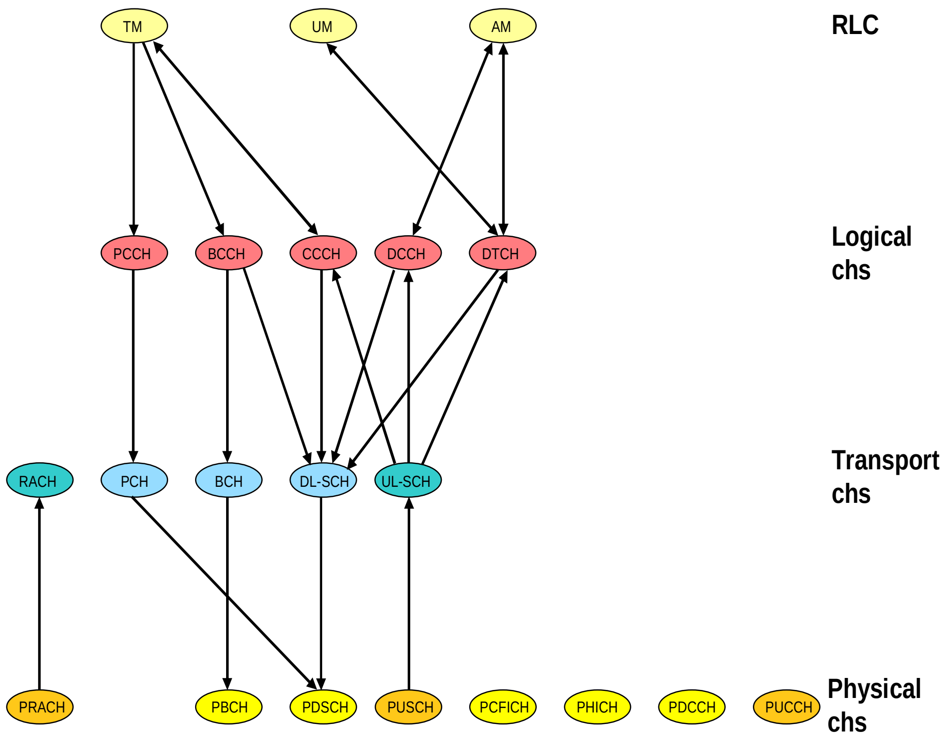

Figure 7.1-1: Channel type mapping for the default configuration of the SS

7.1.1 PDCCH Candidate Selection

In this clause following abbreviations are used:

- Common search Space Aggregation: CS_Agr.
- UE-Specific Search Space Aggregation: UE_Agr.
- Total number of CCEs available in a subframe: Max_CCE.

SS shall apply defined rules below in a DL subframe for PDCCH candidates' selection.

- Scheduled transmissions on SI-RNTI / P-RNTI / RA-RNTI/M-RNTI, use Common Search Space. UL and DL Scheduled transmissions on C-RNTI/ SPS C-RNTI, and DL Scheduled transmissions on Temp. C-RNTI, use UE-Specific Search Space. Transmissions on TPC-PUCCH-RNTI / TPC-PUSCH-RNTI and UL Scheduled transmissions on Temp. C-RNTI is not considered for default CCE management.
- If a transmission on SI-RNTI is scheduled, PDCCH candidate corresponding to CCEs between 0 and (CS_Agr-1) is used. For FDD, this PDCCH candidate is reserved for SI-RNTI, and left vacant if no SI-RNTI transmission is scheduled. For TDD the default UL/DL configuration type 1, this PDCCH candidate is reserved for SI-RNTI in subframes 0 & 5 (i.e. subframes where PDCCH for UL grant for C-RNTI/SPS-RNTI is not scheduled).
- PDCCH candidates corresponding to CCEs between CS_Agr and (2*CS_Agr-1) can be used for the transmission on P-RNTI, RA-RNTI or M-RNTI. In conformance test cases with single UE, there is no requirement for

transmissions scheduled for more than one of P-RNTI, RA-RNTI or M-RNTI in one DL subframe. As per 36.331[19] clause5.8.1.3, the MCCH change notification indicator shall be transmitted on MBSFN subframes only.

For FDD:

- For DL transmission for C-RNTI/SPS-RNTI/Temp C-RNTI the lowest value of m =m' which has a PDCCH available from CCEs between 2*CS_Agr and (Max_CCE-1) shall be used. 'm' is defined in TS 36.213 [30], clause 9.1.1.
- For UL transmission for C-RNTI/SPS-RNTI the lowest value of m =m">m' which has a PDCCH available from CCEs between 2*CS_Agr and (Max_CCE-1) shall be used, irrespective of PDCCH candidate corresponding to m' is used or not.

For TDD:

- For DL transmission, for C-RNTI/SPS-RNTI/Temp C-RNTI the lowest value of m =m' which has a PDCCH available from CCEs between 1*CS_Agr and (Max_CCE-1) shall be used. 'm' is defined in TS 36.213 [30] clause 9.1.1. It is further assumed that in a typical conformance testing environment, there will not be a requirement to schedule DL transmission for C-RNTI/SPS-RNTI/Temp C-RNTI, P=RNTI and RA-RNTI in one DL sub frame.
- For UL transmission, for C-RNTI/SPS-RNTI the lowest value of m =m"and if in the sub frame m' is also used, m"!=m' has a PDCCH available from CCEs between 0 and (Max_CCE-1) shall be used.

NOTE: If m' or m" cannot be allocated in any TTI, it is a TTCN error due to X-RNTI not properly allocated. The error shall be reported to TTCN. The TTCN will exit the test case assigning an inconclusive verdict.

7.1.1.1 FDD candidates selection

Table 7.1.1.1-1 gives the CCE resources utilized for m' and m" for default values of common search space aggregation level =4, UE-specific search space aggregation L=2 resulting in 6 PDCCH candidates m=0..5 and channel Bandwidth of 5 MHz. This give Max_CCE =20 for FDD. The table also gives the corresponding CCE start indices of PDCCH candidates for m' and m".

Table 7.1.1.1-1: CCE Start indices(m' & m'' to be used for various C-RNTIs (5 MHz)

C-RNTI	Value		SF0	SF1	SF2	SF3	SF4	SF5	SF6	SF7	SF8	SF9
tsc_C_RNTI_Def	'1001'H 4097	m'	0	1	0	0	0	3	4	0	0	0
		CCE_St_Ind'	12	8	14	8	12	8	8	8	14	10
		m''	1	2	1	1	1	4	5	1	1	1
		CCE_St_Ind''	14	10	16	10	14	10	10	10	16	12
tsc_C_RNTI_Def2	'1034'H 4148	m'	0	0	2	0	0	4	4	1	0	0
		CCE_St_Ind'	12	16	8	14	10	8	8	8	18	16
		m''	1	1	3	1	1	5	5	2	5	1
		CCE_St_Ind''	14	18	10	16	12	10	10	10	8	18
tsc_C_RNTI_Def3	'1111'H 4369	m'	0	0	0	2	3	0	0	0	0	4
		CCE_St_Ind'	16	10	14	8	8	10	14	8	18	8
		m''	1	1	1	3	4	1	1	1	5	5
		CCE_St_Ind''	18	12	16	10	10	12	16	10	8	10
tsc_C_RNTI_Def4	'1FF1'H 8177	m'	0	0	0	0	3	0	0	0	2	4
		CCE_St_Ind'	12	12	18	16	8	18	18	18	8	8
		m''	1	1	5	1	4	5	5	5	3	5
		CCE_St_Ind''	14	14	8	18	10	8	8	8	10	10
tsc_C_RNTI_Def5	'04D2'H 1234	m'	0	2	0	4	0	2	3	0	1	0
		CCE_St_Ind'	10	8	10	8	14	8	8	14	8	10
		m''	1	3	1	5	1	3	4	1	2	1
		CCE_St_Ind''	12	10	12	10	16	10	10	16	10	12
tsc_C_RNTI_Def6	'0929'H 2345	m'	4	0	4	0	0	1	3	3	4	2
		CCE_St_Ind'	8	10	8	12	14	8	8	8	8	8
		m''	5	1	5	1	1	2	4	4	5	3
		CCE_St_Ind''	10	12	10	14	16	10	10	10	10	10
tsc_C_RNTI_Def7	'0D80'H 3456	m'	2	0	2	0	0	0	3	0	0	2
		CCE_St_Ind'	8	16	8	18	14	14	8	16	14	8
		m''	3	1	3	5	1	1	4	1	1	3
		CCE_St_Ind''	10	18	10	8	16	16	10	18	16	10
tsc_C_RNTI_Def8	'11D7'H 4567	m'	0	0	0	2	0	0	3	2	0	2
		CCE_St_Ind'	8	16	8	8	14	16	8	8	8	8
		m''	1	1	1	3	1	1	4	3	1	3
		CCE_St_Ind''	10	18	10	10	16	18	10	10	10	10
tsc_C_RNTI_Def9	'162E'H 5678	m'	0	3	0	0	0	2	0	0	3	2
		CCE_St_Ind'	12	8	12	16	8	8	16	18	8	8
		m''	1	4	1	1	1	3	1	5	4	3
		CCE_St_Ind''	14	10	14	18	10	10	18	8	10	10
tsc_C_RNTI_Def10	'1A85'H 6789	m'	0	0	0	3	0	1	0	1	3	2
		CCE_St_Ind'	16	8	16	8	8	8	16	8	8	8
		m''	1	1	1	4	1	2	1	2	4	3
		CCE_St_Ind''	18	10	18	10	10	10	18	10	10	10

Tables 7.1.1.1-2, 7.1.1.1-3 and 7.1.1.1-4 give the CCE resources utilized for m' and m'' for default values of common search space aggregation level =4, UE-specific search space aggregation L=2 resulting in 6 PDCCH candidates m=0..5 and bandwidths of 10/15/20 MHz respectively. This gives Max_CCE =25(10 MHz)/37(15 MHz)/50(20 MHz) for FDD. The tables also give the corresponding CCE start indices of PDCCH candidates for m' and m''. These are in general to be applied in MAC Transport block size test cases defined in clause 7.1.7 of TS 36.523-1 [1].

Table 7.1.1.1-2: CCE Start indices (m' & m'') to be used for default C-RNTI (10 MHz)

C-RNTI	Value		SF0	SF1	SF2	SF3	SF4	SF5	SF6	SF7	SF8	SF9
tsc_C_RNTI_Def	'1001'H 4097	m'	0	3	3	0	0	0	0	0	0	0
		CCE_St_Ind'	12	8	8	20	16	18	16	8	14	18
		m''	1	4	4	1	1	1	1	1	1	1
		CCE_St_Ind''	14	10	10	22	18	20	18	10	16	20
tsc_C_RNTI_Def2	'1034'H 4148	m'	0	4	0	0	0	4	0	0	0	0
		CCE_St_Ind'	8	8	20	10	14	8	20	22	18	8
		m''	1	5	1	1	1	5	1	5	1	1
		CCE_St_Ind''	10	10	22	12	16	10	22	8	20	10
tsc_C_RNTI_Def3	'1111'H 4369	m'	0	0	0	4	0	0	0	2	0	0
		CCE_St_Ind'	16	10	10	8	22	22	22	8	10	16
		m''	1	1	1	5	5	5	5	3	1	1
		CCE_St_Ind''	18	12	12	10	8	8	8	10	12	18
tsc_C_RNTI_Def4	'1FF1'H 8177	m'	2	0	0	4	0	0	3	0	2	0
		CCE_St_Ind'	8	20	14	8	10	18	8	22	8	12
		m''	3	1	1	5	1	1	4	5	3	1
		CCE_St_Ind''	10	22	16	10	12	20	10	8	10	14
tsc_C_RNTI_Def5	'04D2'H 1234	m'	3	0	0	0	0	2	3	3	1	0
		CCE_St_Ind'	8	16	22	12	22	8	8	8	8	22
		m''	4	1	5	1	5	3	4	4	2	5
		CCE_St_Ind''	10	18	8	14	8	10	10	10	10	8
tsc_C_RNTI_Def6	'0929'H 2345	m'	0	0	2	2	0	1	0	0	0	2
		CCE_St_Ind'	20	18	8	8	18	8	18	22	12	8
		m''	1	1	3	3	1	2	1	5	1	3
		CCE_St_Ind''	22	20	10	10	20	10	20	8	14	10
tsc_C_RNTI_Def7	'0D80'H 3456	m'	4	0	0	1	0	0	0	0	0	4
		CCE_St_Ind'	8	20	20	8	14	22	10	8	18	8
		m''	5	1	1	2	1	5	1	1	1	5
		CCE_St_Ind''	10	22	22	10	16	8	12	10	20	10
tsc_C_RNTI_Def8	'11D7'H 4567	m'	2	0	0	0	0	4	3	2	4	0
		CCE_St_Ind'	8	8	12	8	10	8	8	8	8	20
		m''	3	1	1	1	1	5	4	3	5	1
		CCE_St_Ind''	10	10	14	10	12	10	10	10	10	22
tsc_C_RNTI_Def9	'162E'H 5678	m'	0	0	2	4	0	0	2	0	1	0
		CCE_St_Ind'	8	10	8	8	16	16	8	14	8	16
		m''	1	1	3	5	1	1	3	1	2	1
		CCE_St_Ind''	10	12	10	10	18	18	10	16	10	18
tsc_C_RNTI_Def10	'1A85'H 6789	m'	0	0	0	3	0	0	0	0	3	0
		CCE_St_Ind'	12	12	20	8	12	18	20	10	8	12
		m''	1	1	1	4	1	1	1	1	4	1
		CCE_St_Ind''	14	14	22	10	14	20	22	12	10	14

Table 7.1.1.1-3: CCE Start indices (m' & m'') to be used for default C-RNTI (15 MHz)

C-RNTI	Value		SF0	SF1	SF2	SF3	SF4	SF5	SF6	SF7	SF8	SF9
tsc_C_RNTI_Def	'1001'H 4097	m'	4	0	0	0	0	0	0	0	0	0
		CCE_St_Ind'	8	14	14	20	16	18	28	20	26	30
		m''	5	1	1	1	1	1	1	1	1	1
		CCE_St_Ind''	10	16	16	22	18	20	30	22	28	32

Table 7.1.1.1-4: CCE Start indices (m' & m'') to be used for default C-RNTI (20 MHz)

C-RNTI	Value		SF0	SF1	SF2	SF3	SF4	SF5	SF6	SF7	SF8	SF9
tsc_C_RNTI_Def	'1001'H 4097	m'	3	0	0	0	0	0	0	0	2	0
		CCE_St_Ind'	8	36	34	38	42	22	10	8	8	20
		m''	4	1	1	1	1	1	1	1	3	1
		CCE_St_Ind''	10	38	36	40	44	24	12	10	10	22

7.1.1.2 TDD candidates selection

The default TDD subframe configuration 1 is applied to this clause. By default no DL data is scheduled in special subframes 1 and 6.

Considering that each TDD subframe having different PHICH group number, and only two symbols being present for PDCCH in the special subframes 1 and 6 for bandwidth of 5 MHz, two symbols for PDCCH in all subframes for bandwidth of 10/15/20 MHz (TS 36.508 [3]), each subframe has, therefore, different number of MAX_CCE.

Table 7.1.1.2-1 gives the PDCCH candidates of m' and m'' for default values of common search space aggregation level =8, UE-specific search space aggregation L=8 resulting in 2 PDCCH candidates m=0,1 and the corresponding CCE start indices for channel bandwidth of 5MHz. SF0 and SF5 cannot be used for UL grant. SF1 and SF6 are not used for DL assignment. SF2, SF3, SF7 and SF8 are not applicable to PDCCH CCE allocation since they are uplink subframes.

Table 7.1.1.2-1: CCE Start indices (m' & m'') to be used for various C-RNTIs (5 MHz)

C-RNTI	Value		SF0	SF1	SF2	SF3	SF4	SF5	SF6	SF7	SF8	SF9
		Max_CCE	21	12	-	-	20	21	12	-	-	20
tsc_C_RNTI_Def	'1001'H 4097	m'	1	-	-	-	1	0	-	-	-	0
		CCE_St_Ind'	8	-	-	-	8	8	-	-	-	8
		m''	-	0	-	-	0	-	0	-	-	1
		CCE_St_Ind''	-	0	-	-	0	-	0	-	-	0
tsc_C_RNTI_Def2	'1034'H 4148	m'	1	-	-	-	0	1	-	-	-	1
		CCE_St_Ind'	8	-	-	-	8	8	-	-	-	8
		m''	-	0	-	-	1	-	0	-	-	0
		CCE_St_Ind''	-	0	-	-	0	-	0	-	-	0
tsc_C_RNTI_Def3	'1111'H 4369	m'	1	-	-	-	0	0	-	-	-	1
		CCE_St_Ind'	8	-	-	-	8	8	-	-	-	8
		m''	-	0	-	-	1	-	0	-	-	0
		CCE_St_Ind''	-	0	-	-	0	-	0	-	-	0
tsc_C_RNTI_Def4	'1FF1'H 8177	m'	1	-	-	-	0	0	-	-	-	1
		CCE_St_Ind'	8	-	-	-	8	8	-	-	-	8
		m''	-	0	-	-	1	-	0	-	-	0
		CCE_St_Ind''	-	0	-	-	0	-	0	-	-	0
tsc_C_RNTI_Def5	'04D2'H 1234	m'	0	-	-	-	0	1	-	-	-	0
		CCE_St_Ind'	8	-	-	-	8	8	-	-	-	8
		m''	-	0	-	-	1	-	0	-	-	1
		CCE_St_Ind''	-	0	-	-	0	-	0	-	-	0
tsc_C_RNTI_Def6	'0929'H 2345	m'	1	-	-	-	0	0	-	-	-	1
		CCE_St_Ind'	8	-	-	-	8	8	-	-	-	8
		m''	-	0	-	-	1	-	0	-	-	0
		CCE_St_Ind''	-	0	-	-	0	-	10	-	-	0
tsc_C_RNTI_Def7	'0D80'H 3456	m'	1	-	-	-	0	0	-	-	-	1
		CCE_St_Ind'	8	-	-	-	8	8	-	-	-	8
		m''	-	0	-	-	1	-	0	-	-	0
		CCE_St_Ind''	-	0	-	-	0	-	0	-	-	0
tsc_C_RNTI_Def8	'11D7'H 4567	m'	1	-	-	-	0	0	-	-	-	1
		CCE_St_Ind'	8	-	-	-	8	8	-	-	-	8
		m''	-	0	-	-	1	-	0	-	-	0
		CCE_St_Ind''	-	0	-	-	0	-	0	-	-	0
tsc_C_RNTI_Def9	'162E'H 5678	m'	1	-	-	-	0	0	-	-	-	1
		CCE_St_Ind'	8	-	-	-	8	8	-	-	-	8
		m''	-	0	-	-	1	-	0	-	-	0
		CCE_St_Ind''	-	0	-	-	0	-	0	-	-	0
tsc_C_RNTI_Def10	'1A85'H 6789	m'	1	-	-	-	0	0	-	-	-	1
		CCE_St_Ind'	8	-	-	-	8	8	-	-	-	8
		m''	-	0	-	-	1	-	0	-	-	0
		CCE_St_Ind''	-	0	-	-	0	-	0	-	-	0

Tables 7.1.1.2-2, 7.1.1.2-3 and 7.1.1.2-4 give the PDCCH candidates of m' and m'' for default values of common search space aggregation level =8, UE-specific search space aggregation L=8 resulting in 2 PDCCH candidates m=0,1 and the corresponding CCE start indices for bandwidths of 10/15/20 MHz respectively, with the different Max_CCE number for each subframe.

Table 7.1.1.2-2: CCE Start indices (m' & m'') to be used for default C-RNTI (10 MHz)

C-RNTI	Value		SF0	SF1	SF2	SF3	SF4	SF5	SF6	SF7	SF8	SF9
		Max_CCE	27	25	-	-	25	27	25	-	-	25
tsc_C_RNTI_Def	'1001'H 4097	m'	1	-	-	-	0	1	-	-	-	1
		CCE_St_Ind'	8	-	-	-	16	8	-	-	-	8
		m''	-	0	-	-	1	-	0	-	-	0
		CCE_St_Ind''	-	8	-	-	0	-	16	-	-	0

Table 7.1.1.2-3: CCE Start indices (m' & m'') to be used for default C-RNTI (15 MHz)

C-RNTI	Value		SF0	SF1	SF2	SF3	SF4	SF5	SF6	SF7	SF8	SF9
		Max_CCE	41	37	-	-	37	41	37	-	-	37
tsc_C_RNTI_Def	'1001'H 4097	m'	0	-	-	-	1	0	-	-	-	0
		CCE_St_Ind'	8	-	-	-	8	8	-	-	-	8
		m''	-	0	-	-	0	-	0	-	-	1
		CCE_St_Ind''	-	8	-	-	0	-	0	-	-	16

Table 7.1.1.2-4: CCE Start indices (m' & m'') to be used for default C-RNTI (20 MHz)

C-RNTI	Value		SF0	SF1	SF2	SF3	SF4	SF5	SF6	SF7	SF8	SF9
		Max_CCE	55	50	-	-	50	55	50	-	-	50
tsc_C_RNTI_Def	'1001'H 4097	m'	1	-	-	-	0	0		-	-	0
		CCE_St_Ind'	8	-	-	-	16	24		-	-	24
		m''	-	0	-	-	1		0	-	-	1
		CCE_St_Ind''	-	8	-	-	24		16	-	-	32
tsc_C_RNTI_Def2	‘1034'H 4148	m'	0	-	-	-	0	1	-	-	-	0
		CCE_St_Ind'	32	-	-	-	8	8	-	-	-	32
		m''	-	0	-	-	1	-	0	-	-	1
		CCE_St_Ind''	-	0	-	-	16	-	32	-	-	40
tsc_C_RNTI_Def3	‘1111'H 4369	m'	0	-	-	-	0	0	-	-	-	0
		CCE_St_Ind'	16	-	-	-	40	40	-	-	-	16
		m''	-	0	-	-	1	-	0	-	-	1
		CCE_St_Ind''	-	40	-	-	0	-	40	-	-	24
tsc_C_RNTI_Def4	‘1FF1'H 8177	m'	0	-	-	-	0	0	-	-	-	1
		CCE_St_Ind'	16	-	-	-	40	24	-	-	-	8
		m''	-	0	-	-	1	-	0	-	-	0
		CCE_St_Ind''	-	32	-	-	0	-	8	-	-	0
tsc_C_RNTI_Def5	‘04D2'H 1234	m'	0	-	-	-	0	0	-	-	-	0
		CCE_St_Ind'	8	-	-	-	40	16	-	-	-	40
		m''	-	0	-	-	1	-	0	-	-	1
		CCE_St_Ind''	-	16	-	-	0	-	8	-	-	0
tsc_C_RNTI_Def6	‘0929'H 2345	m'	0	-	-	-	0	0	-	-	-	0
		CCE_St_Ind'	32	-	-	-	24	24	-	-	-	16
		m''	-	0	-	-	1	-	0	-	-	1
		CCE_St_Ind''	-	24	-	-	32	-	24	-	-	24
tsc_C_RNTI_Def7	‘0D80'H 3456	m'	1	-	-	-	0	0	-	-	-	1
		CCE_St_Ind'	8	-	-	-	8	40	-	-	-	8
		m''	-	0	-	-	1	-	0	-	-	0
		CCE_St_Ind''	-	32	-	-	16	-	40	-	-	0
tsc_C_RNTI_Def8	‘11D7'H 4567	m'	0	-	-	-	0	1	-	-	-	0
		CCE_St_Ind'	16	-	-	-	40	8	-	-	-	32
		m''	-	0	-	-	1	-	0	-	-	1
		CCE_St_Ind''	-	32	-	-	0	-	8	-	-	40
tsc_C_RNTI_Def9	‘162E'H 5678	m'	0	-	-	-	0	0	-	-	-	0
		CCE_St_Ind'	32	-	-	-	16	16	-	-	-	16
		m''	-	0	-	-	1	-	0	-	-	1
		CCE_St_Ind''	-	40	-	-	24	-	16	-	-	24
tsc_C_RNTI_Def10	‘1A85'H 6789	m'	1	-	-	-	1	0	-	-	-	1
		CCE_St_Ind'	8	-	-	-	8	24	-	-	-	8
		m''	-	0	-	-	0	-	0	-	-	0
		CCE_St_Ind''	-	0	-	-	0	-	32	-	-	0

7.1.1.2.1 TDD candidates selection in special subframes

In test cases (7.1.3.12/13) testing DL data transmission in special subframes following CCE tables will be used

Table 7.1.1.2.1-1: CCE Start indices (m' & m'') to be used for various default C-RNTI (5 MHz)

C-RNTI	Value		SF0	SF1	SF2	SF3	SF4	SF5	SF6	SF7	SF8	SF9
		Max_CCE	21	12	-	-	20	21	12	-	-	20
tsc_C_RNTI_Def	'1001'H 4097	m'	1	1	-	-	1	0	1	-	-	0
		CCE_St_Ind'	8	0	-	-	8	8	0	-	-	8
		m''	-	0	-	-	0	-	0	-	-	1
		CCE_St_Ind''	-	0	-	-	0	-	0	-	-	0
tsc_C_RNTI_Def2	'1034'H 4148	m'	1	1	-	-	0	1	1	-	-	1
		CCE_St_Ind'	8	0	-	-	8	8	0	-	-	8
		m''	-	0	-	-	1	-	0	-	-	0
		CCE_St_Ind''	-	0	-	-	0	-	0	-	-	0

NOTE: Special subframes with Max CCE =12 and aggregation of 8 result in only 1 PDCCH. Hence either only UL grant or DL allocation is possible.

Table 7.1.1.2.1-2: CCE Start indices (m' & m'') to be used for default C-RNTI (20 MHz)

C-RNTI	Value		SF0	SF1	SF2	SF3	SF4	SF5	SF6	SF7	SF8	SF9
		Max_CCE	55	50	-	-	50	55	50	-	-	50
tsc_C_RNTI_Def	'1001'H 4097	m'	1	0	-	-	0	0	0	-	-	0
		CCE_St_Ind'	8	8	-	-	16	24	16	-	-	24
		m''	-	1	-	-	1	-	1	-	-	1
		CCE_St_Ind''	-	16	-	-	24	-	24	-	-	32
tsc_C_RNTI_Def2	'1034'H 4148	m'	0	1	-	-	0	1	0	-	-	0
		CCE_St_Ind'	32	8	-	-	8	8	32	-	-	32
		m''	-	0	-	-	1	-	1	-	-	1
		CCE_St_Ind''	-	0	-	-	16	-	40	-	-	40

7.2 Uplink Grant

The Network/SS informs the UE if it is allowed to make Uplink Data transmission by transmitting 'DCI format 0' on PDCCH. The UE shall transmit (4 TTI later for FDD or variable for TDD) a Transport block of exactly the same size as specified in DCI format 0. The UE has no control of its own on TB size, and has to merely follow the network, even if that means lots of MAC padding or resource starving.

The UE has the following means to communicate if it has UL data ready for transmission and subsequently the estimate of quantity of data to be transmitted.

RACH procedure: UE in idle mode, handed over to a new cell or connected mode but PUCCH is unsynchronized (sometimes referred to as PUCCH is not configured) will trigger RACH procedure on data ready for transmission in UL.

Scheduling Request: UE in connected mode, no grant configured, PUCCH is synchronized and has data ready for transmission in UL, will transmit a scheduling request on PUCCH.

Buffer Status Reports: UE in connected mode, PUCCH synchronized, has a configured grant for current TTI, but grant is not sufficient to transmit all the data will include MAC control element BSR in the UL MAC PDU.

RACH and SR indicate on data availability and BSR provides an estimate of data available for transmission.

CQI/PMI/RI feedback from the UE which indicates the channel conditions and recommended number of layers.

Hence to determine the exact need of the grant requirement of the UE a network/SS needs to act on all four of the above. This eventually complicates the SS implementation and hence the grant allocation procedure is simplified such that SS needs only to react on reception of SR and grant allocation configured from the TTCN.

The SS disables aperiodic CQI/PMI/RI feedback from the UE by setting the ‘CQI request field’ to 0 in DCI format 0/RAR grant.

When request for periodic CQI/PMI/RI feedback is requested due to TTCN configuration, the SS does not react on periodic CQI/PMI/RI feedback received and still allocates grants as configured from TTCN.

The SS, if configured for maintaining PUCCH synchronization at UE, shall periodically transmit automatically MAC PDUs containing the MAC control element 'Timing Advance'. The period as configured by the TTCN is set to 80 % of the 'Time Alignment Timer' default value (750 ms) configured at UE.

Additionally the SS can be configured to automatically transmit a 'configured' UL grant at every reception of a Scheduling Request. This grant should be selected under the following restrictions:

- All UE categories can handle this i.e. (TBS <= 5160).
- It is sufficiently large that most of uplink signalling messages can be transmitted. In case the grant is not sufficient to fit the whole UL data, the UE will have to wait for the expiry of RETX_BSR_TIMER and retransmit a SR. And hence the procedure is repeated.

The following 4 types of grant allocation configurations are possible. Grant allocation Types 1 to 3 are applicable, when the UE is in connected state. Grant allocation Type 4 is applicable when UE is establishing /re-establishing the RRC Connection, or during handover or in connected state but PUCCH is not synchronised.

Grant Allocation Type 1:

- SS is configured to maintain PUCCH Synch.
- SS is configured to send an automatically 'configured Grant' (in terms of I_{MCS} and N_{PRB}) to the UE on every reception of a Scheduling Request, within 10 subframes. The default configured grant is $I_{\mathrm{MCS}} = 9$ and $N_{\mathrm{PRB}} = 25$, unless explicitly specified in test cases.
- By default this type of grant allocation is applied. The majority of Idle mode, RRC and NAS test cases, the preambles of all tests and the postambles of those tests for which UE is still PUCCH synchronised at the end of test body. A few Layer 2 tests also use this type of grant.

Grant Allocation Type 2:

- Configure SS to maintain PUCCH Synch.
- Configure SS to periodically transmit a grant (I_{MCS} and N_{PRB}). Number of grants (1 or more) and period (in ms) configured by TTCN.
- The first grant transmitted is as specified in the explicit timing information. If timing information is "now" the SS selects the first suitable subframe for UL transmission.
- The grant allocation period for TDD shall be assigned without conflict with the allowed UL subframes in the TDD subframe configurations. As example of allocation period, the TDD UL Grant allocation can be assigned as in multiples of 5 ms.
- This type of grant allocation is applicable to the majority of RLC, PDCP and a few MAC test cases.
- No additional grant is allocated on reception of any SRs.

Grant Allocation Type 3:

- SS may or may not be configured to maintain PUCCH Synch.
- Configure SS to transmit a one time grant (I_{MCS} and N_{PRB}) in the time requested by TTCN. The one time transmission is achieved by setting Number of grants=1 and period =Only once

- This type of grant allocation is suitable for MAC and DRB tests when UE is in UL Synchronised state

Grant Allocation Type 4 (RACH configuration):

- In addition to the 3 types of UL grant allocations, a fourth type of grant allocation during the RACH procedure is also possible, where the SS behaves as per the RACH procedure configured and allocates the configured grant during the RACH procedure. This UL Grant type is used in the configuration for the preamble in many situations, basically in MAC test cases. This type of grant is further used when UE is establishing/re-establishing the RRC connection or during handover, or when the UE is not PUCCH synchronised;

All the UL grant allocation methods define grant allocation in terms of I_{MCS} and N_{PRB} to be used. The SS shall allocate RBs corresponding to PRB indices 0..(N_{PRB}-1).

7.2.1 Exception TC list

This clause contains the exception test case list where the explicit uplink grant types other than UL grant type 1 are specified.

Table 7.2.1-1: Exception test case list with explicit uplink grant types other than UL grant type 1

Group	Test Case	Uplink Grant Type 2	Uplink Grant Type 3
RLC	7.2.2.6	X	
	7.2.2.7	X	
	7.2.3.1		X
	7.2.3.2	X	
	7.2.3.4		X
	7.2.3.5		X
	7.2.3.6	X	
	7.2.3.7	X	
	7.2.3.9	X	
	7.2.3.10	X	X
	7.2.3.13	X	X
	7.2.3.15	X	
	7.2.3.17	X	
	7.2.3.18		X
	7.2.3.21		X
MAC	7.1.4.1	X	
	7.1.4.2		X
	7.1.4.3	X	
	7.1.4.4		X
	7.1.4.7		X
	7.1.4.8	X	X
	7.1.4.10		X
	7.1.4.11		X
	7.1.4.14		X
	7.1.4.15	X	
	7.1.4.16	X	
	7.1.5.1	X	
	7.1.5.2	X	
	7.1.5.3	X	
	7.1.5.4	X	
	7.1.5.5	X	
	7.1.6.1		X
PDCP	7.3.5.4		X
RRC	8.2.1.5	X	
NAS	9.2.1.1.24		X
DRB	12.1.1		X
	12.1.2		X

7.3 Downlink Resource Allocation

The DL resource allocation is an SS emulation function. In order to ensure similar DL behaviours (within defined tolerances) on the different SS platforms in the timing stringent requirements, all downlink resource allocation schemes specified in the present clause shall be supported by the SS.

When the DL data is to be sent with a specific scheduling requirement, for instance, in a TTI in advance rather than “now”, the TTCN shall ensure that the data is scheduled at least 100 ms in advance. The 100 ms time in general covers all time delays, from the time DL data is sent by the TTCN at the EUTRA PTC to the completion of the transmission at the SS (TTCN delays, codec delays, adaptor delays and SS processing delays at various protocol Layers). In the case of more than one NAS PDU is piggy-backed in a scheduled RRC PDU, 20ms shall be added per additional NAS PDU: 100ms + ((NoOfNASPDUs – 1) * 20ms; this calculation is based on the assumption that there are not more than 7 piggy-backed NAS messages; this is valid for LTE.

NOTE: The DL data means DL signalling and/or data in the present clause.

7.3.1 PDCCH DCI default formats

Two types of DCI combinations are identified as default formats for the signalling and protocol test.

DCI combination 1 uses:

- DCI format 1A, resource allocation type 2 localised, for all DL scheduling types.

DCI combination 2 uses:

- DCI format 1C, resource allocation type 2 distributed, for scheduling of PCCH/BCCH/RAR; and
- DCI format 1 resource allocation type 0, for UE dedicated scheduling.

7.3.1.1 Default DCI Format to be used in test cases configuring MIMO

Transmission mode 3 will be used in MIMO test cases configuring 2 Transmit antenna SS environment. As per 36.213 Table 7.1-5, in Transmission mode 3, UE is expected to decode only DCI formats 2A and 1A. Similarly for Transmission mode 4, UE is expected to decode only DCI formats 2 and 1A. Hence for all test cases configuring 2TX (2 antenna ports) at SS, DCI combination 1 is the default DCI combination to be applied. This allows DCI format 1A to be used as default DL scheduling scheme for test sequences not explicitly specified to use DCI formats 2A or 2(i.e. preamble, postamble etc.)

7.3.2 Radio parameters configured

The SS shall support DL QPSK, 16QAM and 64QAM modulation schemes. The configured radio parameters, including DCI format, resource allocation types, maximum allowed modulation scheme, first virtual / physical resource block to be used, maximum available resource blocks and redundancy version, are provided to the SS.

In the normal signalling test condition, DL RLC and HARQ retransmissions are rare. The redundancy version is provided to allow the occasional HARQ retransmissions. For those MAC, RLC tests contained in table 7.3.2-1 where timing requirements are involved the DL or UL HARQ retransmissions are not tolerable. Table 7.3.2-2 lists the RLC tests where timing requirements are involved, only one DL or UL HARQ retransmission per transport block is tolerable. Unless otherwise specified, if HARQ retransmissions occur in the test cases contained in table 7.3.2-1 or more than one HARQ retransmission occurs in the test cases of table 7.3.2-2, the test cases will be terminated with verdict inconclusive.

NOTE: If the test is expecting the reporting of UL ACK/NACK for the DL MAC PDUs, or is configuring the PHICH in a certain mode, HARQ retransmissions other than those that are already specified in the prose will have an impact on the test sequence. If test cases perform scheduling of data transmissions and/or receptions, or the testing timers in the test cases are less than 900 ms (i.e. the tolerance for 90 ms), HARQ retransmissions will make it difficult to continue testing.

Table 7.3.2-1: TC list intolerable of HARQ retransmissions

Test case	Comment
MAC	
7.1.3.1, 7.1.3.2, 7.1.3.4, 7.1.3.5, 7.1.3.6, 7.1.3.9, 7.1.6.1, 7.1.6.2	HARQ feedback reporting enabled or DL CRC errors introduced; DL HARQ un specified (re)transmissions will result in 'Fail' in test body, UL HARQ retransmissions are allowed;
7.1.4.8	Strict relationship between grant and UL data
7.1.4.3	Up to 104 PDUs to be sent in DL every TTI;
7.1.4.2, 7.1.4.11, 7.1.4.12, 7.1.4.14, 7.1.5.4	HARQ feedback transmission specified or PHICH errors introduced
7.1.4.15, 7.1.4.16	Periodic UL grants
RLC	
7.2.2.6, 7.2.2.7, 7.2.2.8, 7.2.2.10, 7.2.3.1, 7.2.3.2, 7.2.3.4, 7.2.3.5, 7.2.3.10, 7.2.3.13, 7.2.3.14, 7.2.3.15, 7.2.3.18	Tolerating HARQ retransmissions is not feasible due to rigid timing and scheduling conditions. Testing timer < 900 ms

Table 7.3.2-2: TC list intolerable of more than one HARQ retransmission per transport block

Test case	Comment
RLC	
7.2.3.6, 7.2.3.7, 7.2.3.8, 7.2.3.9, 7.2.3.17	Tolerating more than one HARQ retransmission is not feasible due to rigid timing and scheduling conditions. Testing timer < 900 ms

7.3.2.1 HARQ Retransmission when MIMO is configured

For test cases configuring MIMO, if in a TTI more than one transport blocks are scheduled (DCI format 2/ 2A/2B), the HARQ retransmission is handled independently for each transport block by SS. In case UE ACKs one Transport block and NACKs the other and there is no fresh data scheduled for transmission, SS only schedules the NACKed transport block for retransmission, using same I_{mcs} as used in initial transmission, mapped to codeword 0. Acked Transport block (and hence codeword 1) is disabled by setting corresponding $I_{\text{MCS}} = 0$ and $rv_{idx} = 1$. Resource allocation (Nprb) used in retransmission is same as in initial transmission.

It is assumed that retransmission and fresh data scheduled in one TTI will not happen.

7.3.3 General DL scheduling scheme

The rules in the present clause, unless particularly specified, are applied to both default DCI combinations.

The bandwidth of 5/10/20 MHz makes 25/50/100 available physical resource blocks respectively. The 25/50/100 resource blocks are divided into three distinct sets. Exact set sizes and the elements contained in the individual sets depend upon the DCI combination to be applied.

- The first set is reserved for BCCH mapped to DL-SCH (SI-RNTI).
- The second set is reserved for PCCH mapped to DL-SCH (P-RNTI).
- The third set is used for one of mutually exclusive transmissions of:
  - 'Random Access Response' mapped to DL-SCH (RA-RNTI); or
  - UE-dedicated scheduling mapped to DL-SCH (C-RNTI/ SPS C-RNTI/ Temp C-RNTI).

For each subframe for which data of one or more types is scheduled, the SS shall select a Transport Block Size (TBS), independently for each type of data scheduled, such that:

- All the scheduled data is transmitted respecting the timing information. More details on the timing information can be found in clause 7.8.
- Not more than MaxRbCnt resource blocks are used, for DCI format 1C, N_{PRB} = MaxRbCnt.

- Minimum MAC Padding is performed.
- If all scheduled Data cannot be transmitted in the indicated subframe, for example due to TDD and half duplex configuration, it shall be transmitted in the next available subframe.

7.3.3.1 Additional rules for BCCH scheduling scheme

This scheme is applicable for Data transmission on logical channel BCCH mapped to DL-SCH, PDCCH scrambled by SI-RNTI. For both DCI combinations 4 physical resource blocks are reserved for BCCH transmission. The maximum modulation scheme is restricted to QPSK.

Following additional rules are applied for TBS selection:

- The Max TBS, the maximum TBS allowed for the scheduling scheme, is restricted to 600. (nearest value achievable for $I_{TBS} = 9$ and $N_{\mathrm{PRB}} = 4$, as per table 7.1.7.2.1-1 of TS 36.213 [30]).
- If the scheduled Data cannot fit into a TBS smaller or equal to Max TBS, SS generates an error (it's a TTCN error). TTCN should gracefully exit the test case as a fatal error, assigning inconclusive verdict.
- Rules in clause 7.3.3.1.1 for DCI combination 1 and in clause 7.3.3.1.2 for DCI combination 2 shall be applied.

7.3.3.1.1 BCCH with DCI combination 1

TS 36.213 [30], table 7.1.7.2.1-1, rows with I_{TBS} =0..26 and columns with N_{PRB} =2 (corresponding to TPC LSB =0) and N_{PRB} =3 (corresponding to TPC LSB =1), TBS <=Max TBS are applicable.

Distinct TBSs and all (TPC LSB, I_{TBS}) combinations for each distinct TBS are listed in the sheet.

If a TBS can have two (TPC LSB, I_{TBS}) combinations, the combination with TPC LSB =0 is selected.

RIV indicates 4 PRBs with index 0..3 allocated.

7.3.3.1.2 BCCH with DCI combination 2

TS 36.213 [30], table 7.1.7.2.3-1 , I_{TBS} =0..17 with TBS ≤Max TBS are applicable.

RIV indicates 4 virtual RBs with index 0..3 allocated. These virtual RBs correspond to the physical RBs

- with index 0, 6, 12, 18 in even slots and 12, 18, 0, 6 in odd slots for 5 MHz bandwidth;
- with index 0, 12, 27, 39 in even slots and 27, 39, 0, 12 in odd slots for 10 MHz bandwidth;
- with index 0, 24, 48, 72 in even slots and 48, 72, 0, 24 in odd slots for 20 MHz bandwidth.

7.3.3.2 Additional rules for PCCH specific scheduling scheme

This scheme is applicable for Data transmission on logical channel PCCH mapped to DL-SCH, PDCCH scrambled by P-RNTI. For DCI combination 1, one physical resource block is reserved. For DCI combination 2, two physical resource blocks are reserved for 5 MHz bandwidth, and four physical resource blocks are reserved for 10 MHz or 20 MHz bandwidth. The maximum modulation scheme is restricted to QPSK.

Following additional rules are applied for TBS selection:

- If the scheduled Data cannot fit into Max TBS, SS generates an error (it's a TTCN error). TTCN should gracefully exit the test case as a fatal error, assigning inconclusive verdict.
- Rules in clause 7.3.3.2.1 for DCI combination 1 and clause 7.3.3.2.2 for DCI combination 2 shall be applied.

7.3.3.2.1 PCCH with DCI combination 1

TS 36.213 [30], table 7.1.7.2.1-1, rows with I_{TBS} =0..26 and columns with N_{PRB} =2 (corresponding to TPC LSB =0) and N_{PRB} =3 (corresponding to TPC LSB =1) TBS < =Max TBS are applicable.

The Max TBS is restricted to 120 (nearest value achievable for I_{TBS} = 9 and N_{PRB} =1, as per table 7.1.7.2.1-1 of TS 36.213 [30]).

Distinct TBSs and all (TPC LSB, I_{TBS}) combinations for each distinct TBS are listed in the sheet.

If a TBS can have two (TPC LSB, I_{TBS}) combinations, the combination with TPC LSB =0 is selected.

RIV indicates 1 PRBs with index 4 allocated.

7.3.3.2.2 PCCH with DCI combination 2

TS 36.213 [30], table 7.1.7.2.3-1, I_{TBS} =0..11 for 5 MHz/ I_{TBS} =0..17 for 10 or 20 MHz with TBS ≤ Max TBS are applicable.

The Max TBS is restricted to

296 bits (nearest value achievable for I_{TBS} = 9 and N_{PRB} =2) for 5 MHz bandwidth,

600 bits (nearest value achievable for I_{TBS} = 9 and N_{PRB} = 4) for 10 or 20 MHz bandwidth.

RIV indicates either two virtual RBs with index 4 and 5 allocated, or four virtual RBs with index 4 to 7 allocated. These virtual RBs correspond to physical RBs:

with index 1 and 7 in even slots and 13 and 19 in odd slots for 5 MHz bandwidth;

with index 1, 13, 28, 40 in even slots and 28, 40, 1, 13in odd slots for 10 MHz bandwidth;

with index 1, 25, 49, 73 in even slots and 49, 73, 1, 25 in odd slots for 20 MHz bandwidth.

7.3.3.3 Additional rules for RAR specific scheduling scheme

This scheme is applicable for transmission of Random Access Response mapped to DL-SCH, PDCCH scrambled by RA-RNTI. For both DCI combinations four physical resource blocks are reserved. The maximum modulation scheme is restricted to QPSK.

Following additional rules are applied for TBS selection:

- The Max TBS is restricted to 600 bits (nearest value achievable for I_{TBS} = 9 and N_{PRB} =4, as per table 7.1.7.2.1-1 of TS 36.213 [30]).
- If the scheduled Data cannot fit into Max TBS, SS generates an error (it's a TTCN error). TTCN should gracefully exit the test case as a fatal error, assigning inconclusive verdict.
- Rules in clause 7.3.3.3.1 for DCI combination 1 and clause 7.3.3.3.2 for DCI combination 2 shall be applied.

7.3.3.3.1 RAR with DCI combination 1

TS 36.213 [30], table 7.1.7.2.1-1, rows with I_{TBS} = 0..26 and columns with N_{PRB} = 2 (corresponding to TPC LSB = 0) and 3 (corresponding to TPC LSB = 1) TBS ≤ Max TBS are applicable

Distinct TBSs and all (TPC LSB, I_{TBS}) combinations for each distinct TBS are listed in the sheet.

If a TBS can have two (TPC LSB, I_{TBS}) combinations, the combination with TPC LSB = 0 is selected.

RIV indicates 4 PRBs with index 5..8 allocated.

7.3.3.3.2 RAR with DCI combination 2

TS 36.213 [30], table 7.1.7.2.3-1, I_{TBS} = 0..17 with TBS <= Max TBS are applicable.

RIV indicates 4 virtual RBs are allocated. These corresponds to physical RB

with index 13, 19, 2, 8 in even slots and 1, 7, 14, 20 in odd slots for 5 MHz bandwidth;

with index 2, 14, 29, 41 in even slots and 29, 41, 2, 14 in odd slots for 10 MHz bandwidth;

with index 2, 26, 50, 74 in even slots and 50, 74, 2, 26 in odd slots for 20 MHz bandwidth.

7.3.3.4 Additional rules for UE-dedicated scheduling scheme in normal mode

The UE-dedicated DL scheduling can work in the normal mode or in the explicit mode. The two resource allocation schemes shall be reconfigurable from each other when the UE and SS are not sending and receiving data, for instance, at end of the test preamble and before the beginning of the test body.

The present clause is specified for the use of the normal mode. The explicit mode is referred to clause 7.3.3.6.

The scheme specified in the present clause is applicable for transmission of data dedicated to a UE in a DL subframe, mapped to DL-SCH, PDCCH scrambled by C-RNTI/ SPS C-RNTI/ Temp C-RNTI when spatial multiplexing MIMO mode is not configured. The maximum modulation scheme is restricted to 64QAM. For the DCI combination 1, 20 physical resource blocks (5 to 24), and for the DCI combination 2, 17 physical resource blocks are reserved. In the case when three intra frequency cells are applied to the test in the DCI combination 1, for the purpose of interference reduction, only 9 PRBs (16 to 24) are reserved.

In TDD normal TBS selection mode, no data is transmitted in DwPTS of the special subframe. For FDD, data can be transmitted in any subframe.

The following additional rules are applied for TBS selection:

- Multiple ASPs can also carry same explicit timing information; indicating different ASP payloads, eventually needs to be transmitted in 1 TTI.
- The Max TBS is restricted to 10296 bits (Max supported by UE category type 1).

For 5 MHz bandwidth and the DCI combination 1 with 20 PRBs or DCI combination 2, the TBS 8248, 8760, and 9528 are blocked as they result in coding rates higher than 0.93.

For 5 MHz bandwidth and special DCI combination 1 with 9 PRBs, the TBS 2216, 5992 and 6712 are blocked as they result in coding rates higher than 0.93.

For 10 MHz and 20 MHz bandwidths none of TBSs are blocked as any TBS combination result in coding rates higher than 0.93.

The blocked TBS are considered to be not available for selection.

- Data pending for transmission in a given sub-frame consists of (listed in transmission priority order):
  - MAC Control Elements that the SS needs to send.
  - AMD STATUS PDU(s) that the SS needs to send.
  - Data not sent in previous subframe(s).
  - Fresh Data scheduled for transmission in this subframe for all logical channels.
- Distinct TBSs and all (N_{PRB}, I_{TBS}) combinations for each distinct TBS are listed in the sheet.
- If a TBS size can be achieved with more than one combination of I_{MCS} (I_{TBS}) and N_{PRB}:
  - Select combination with lowest delta between N_{PRB} and I_{MCS}.
  - If still more than one combination remain, select combination with highest N_{PRB}.
- Not more than one RLC Data PDU shall be placed in a MAC PDU per logical channel (i.e. minimize RLC segmentation).
- In a subframe, in case there is data pending for transmission from more than one logical channel, for each type of data pending for transmission as defined above, priority shall be given to the logical channel with the lowest logical channel priority value. In case of more than one logical channel with the same logical channel priority value, these logical channels should be served equally. Data pending for transmission from more than one logical channel will rarely happen for the signalling and protocol test.

- Data not transmitted within a subframe is scheduled as pending for transmission in the next available subframe according to the priorities given above. Pending data for transmission will rarely happen for the signalling and protocol test.

- TBS selected in a context by various platforms shall be within an allowed deterministic tolerance of:

    - 2 bytes for potential Timing Advance Command MAC Control Element (1 byte data + 1 byte MAC sub header).

    - 4 bytes each for AMD STATUS PDU (2 bytes data + 2 bytes MAC subheader).

    - Therefore in the worst case the SS may add up to (2 + 4 x N_{AMRB}) bytes to the data scheduled for transmission in a certain subframe, where N_{AMRB} is the number of AM radio bearers (SRB or DRB) actively sending DL data in the test, in any subframe.

- For DCI combination 1 RIV is calculated based on physical resource blocks corresponding to N_{PRB} of the selected TBS and (N_{PRB}, I_{TBS}) combination. The physical resource blocks that can be allocated are the first N_{PRB} resources of index range

    - 5..24 for 5 MHz bandwidth,

    - 28..49 for 10 MHz bandwidth,

    - 9..30 for 20 MHz bandwidth. Also in preamble/postamble phase of MAC TBS test cases with 15 MHz bandwidth configured.

- For DCI combination 2, RBG assignment is calculated based on physical resource blocks corresponding to N_{PRB} of the selected TBS and (N_{PRB}, I_{TBS}) combination. The size of RBG is 2 for 5 MHz, 3 for 10 MHz and 4 for 20 MHz. The available physical resource blocks for allocation are:

    - For 5 MHz bandwidth, RBG1(2,3), RBG2(4,5), RBG4(8,9), RBG5(10,11), RBG7(14,15), RBG8(16,17), RBG10(20,21), RBG11(22,23) and RBG12(24). If N_{PRB} is even, the first N_{PRB} /2 available RBGs are allocated. If N_{PRB} is odd, then first (N_{PRB} -1)/2 RBGs and RBG 12 are allocated.

    - For 10 MHz bandwidth, RBG1(3,4,5), RBG2(6,7,8), RBG3(9,10,11), RBG5(15,16,17), RBG6(18,19,20), RBG10(30,31,32), RBG11(33,34,35), RBG12(36,37,38) and RBG16(48,49). If N_{PRB} mod 3 is 0, the first N_{PRB} /3 RBGs are allocated. If mod 3 is 2, then first (N_{PRB} -2)/3 available RBGs and RBG 16 are allocated.

    - For 20 MHz bandwidth, RBG1(4,5,6,7), RBG2(8,9,10,11), RBG3(12,13,14,15), RBG4(16,17,18,19), RBG5(20,21,22,23), RBG7(28,29,30,31), RBG8(32,33,34,35), RBG9(36,37,38,39), RBG10(40,41,42,43), RBG14(56,57,58,59), RBG15(60,61,62,63), RBG16(64,65,66,67), RBG17(68,69,70,71), RBG19(76.77.78.79) and RBG20(80,81,82,83). The first N_{PRB} /4 RBGs are allocated.

7.3.3.5 DL Resource allocation bitmaps

7.3.3.5.1 DCI combination 1

Table 7.3.3.5.1-1: Physical resource allocation bitmap for DCI combination 1 (5 MHz) with 20 PRBs

N_{PRB}	0	1	2	3	4	5	6	7	8	9	10	11	12	13	14	15	16	17	18	19	20	21	22	23	24
BCCH	🟩	🟩	🟩	🟩																					
PCCH					🟦																				
RAR						🟧	🟧	🟧	🟧																
UE-Dedicated						🟪	🟪	🟪	🟪	🟪	🟪	🟪	🟪	🟪	🟪	🟪	🟪	🟪	🟪	🟪	🟪	🟪	🟪	🟪	🟪

Table 7.3.3.5.1-2: Physical resource allocation bitmap for DCI combination 1 (5 MHz) with 9 PRBs

N_{PRB}	0	1	2	3	4	5	6	7	8	9	10	11	12	13	14	15	16	17	18	19	20	21	22	23	24
BCCH	🟩	🟩	🟩	🟩																					
PCCH					🟦																				
RAR						🟧	🟧	🟧	🟧																
UE-Dedicated																	🟪	🟪	🟪	🟪	🟪	🟪	🟪	🟪	🟪

Table 7.3.3.5.1-3 (columns 0–34): Physical resource allocation bitmap for DCI combination 1 (10 MHz)

N_{PRB}	0	1	2	3	4	5	6	7	8	9..22	23..27	28	29	30	31	32	33	34
BCCH	🟩	🟩	🟩	🟩						Not Used	▨ Used for PBCH and other common signals							
PCCH					🟦													
RAR						🟧	🟧	🟧	🟧									
UE-Specific												🟪	🟪	🟪	🟪	🟪	🟪	🟪

Table 7.3.3.5.1-3 (columns 35–49): Physical resource allocation bitmap for DCI combination 1 (10 MHz)

N_{PRB}	35	36	37	38	39	40	41	42	43	44	45	46	47	48	49
BCCH															
PCCH															
RAR															
UE-Specific	🟪	🟪	🟪	🟪	🟪	🟪	🟪	🟪	🟪	🟪	🟪	🟪	🟪	🟪	🟪

Table 7.3.3.5.1-4 (columns 0–20): Physical resource allocation bitmap for DCI combination 1 (20 MHz)

N_{PRB}	0	1	2	3	4	5	6	7	8	9	10	11	12	13	14	15	16	17	18	19	20
BCCH	🟩	🟩	🟩	🟩																	
PCCH					🟦																
RAR						🟧	🟧	🟧	🟧												
UE-Specific										🟪	🟪	🟪	🟪	🟪	🟪	🟪	🟪	🟪	🟪	🟪	🟪

Table 7.3.3.5.1-5 (columns 21-30): Physical resource allocation bitmap for DCI combination 1 (20 MHz)

N_{PRB}	21	22	23	24	25	26	27	28	29	30	31..46	47..52	53..99
BCCH											Not Used	▨ Used for PBCH and other common signals	Not Used
PCCH													
RAR													
UE-Specific	🟪	🟪	🟪	🟪	🟪	🟪	🟪	🟪	🟪	🟪			

NOTE: In preamble/postamble phase of MAC TBS test cases with 15 MHz bandwidth configured, bitmap with columns 1-74 is applicable.

7.3.3.5.2 DCI combination 2

Table 7.3.3.5.2-1: Physical resource allocation bitmap for DCI combination 2 (5 MHz)

N_{PRB}	0	1	2	3	4	5	6	7	8	9	10	11	12	13	14	15	16	17	18	19	20	21	22	23	24
BCCH-Even	0						1						2						3						■
BCCH-Odd	2						3						0						1						■
PCCH-Even		4						5																	■
PCCH-Odd														4						5					■
RAR-Even			8						9					6						7					■
RAR-Odd		6						7							8						9				■
UE-Dedicated			🟪	🟪	🟪	🟪			🟪	🟪	🟪	🟪			🟪	🟪	🟪	🟪			🟪	🟪	🟪	🟪	🟪

Table 7.3.3.5.2-2 (columns 0-20): Physical resource allocation bitmap for DCI combination 2 (10 MHz)

N_{PRB}	0	1	2	3	4	5	6	7	8	9	10	11	12	13	14	15	16	17	18	19	20
BCCH-Even	0												1								
BCCH-Odd	2												3								
PCCH-Even		4												5							
PCCH-Odd		6												7							
RAR-Even			8												9						
RAR-Odd			10												11						
UE-Specific	x	x		🟩	🟩	🟩	🟩	🟩	🟩	🟩	🟩	🟩	x	x		🟩	🟩	🟩	🟩	🟩	🟩
RBGs	0			1			2			3			4			5			6		

Table 7.3.3.5.2-2 (columns 21-41): Physical resource allocation bitmap for DCI combination 2 (10 MHz)

N_{PRB}	21	22	23	24	25	26	27	28	29	30	31	32	33	34	35	36	37	38	39	40	41
BCCH-Even		▨	▨	▨	▨	▨	2												3		
BCCH-Odd		▨	▨	▨	▨	▨	0												1		
PCCH-Even		▨	▨	▨	▨	▨	▨	6												7	
PCCH-Odd		▨	▨	▨	▨	▨	▨	4												5	
RAR-Even		▨	▨	▨	▨	▨	▨		10												11
RAR-Odd		▨	▨	▨	▨	▨	▨		8												9
UE-Specific		x	x	x	x	x	x	x		🟩	🟩	🟩	🟩	🟩	🟩	🟩	🟩	🟩	x	x	
RBGs	7			8			9			10			11			12			13		

Table 7.3.3.5.2-2 (columns 42-49): Physical resource allocation bitmap for DCI combination 2 (10 MHz)

N_{PRB}	42	43	44	45	46	47	48	49
BCCH-Even					Not Used			
BCCH-Odd								
PCCH-Even								
PCCH-Odd								
RAR-Even								
RAR-Odd								
UE-Specific							🟩	🟩
RBG's	14			15			16	

Table 7.3.3.5.2-3 (columns 0-19): Physical resource allocation bitmap for DCI combination 2 (20 MHz)

N_{PRB}	0	1	2	3	4	5	6	7	8	9	10	11	12	13	14	15	16	17	18	19
BCCH-Even	0																			
BCCH-Odd	2																			
PCCH-Even		4																		
PCCH-Odd		6																		
RAR-Even			8																	
RAR-Odd			10																	
UE-Specific	x	x			🟩	🟩	🟩	🟩	🟩	🟩	🟩	🟩	🟩	🟩	🟩	🟩	🟩	🟩	🟩	🟩
RBGs	0				1				2				3				4			

Table 7.3.3.5.2-3 (columns 20-39): Physical resource allocation bitmap for DCI combination 2 (20 MHz)

N_{PRB}	20	21	22	23	24	25	26	27	28	29	30	31	32	33	34	35	36	37	38	39
BCCH-Even					1															
BCCH-Odd					3															
PCCH-Even						5														
PCCH-Odd						7														
RAR-Even							9													
RAR-Odd							11													
UE-Specific	🟩	🟩	🟩	🟩	**x**	**x**			🟩	🟩	🟩	🟩	🟩	🟩	🟩	🟩	🟩	🟩	🟩	🟩
RBGs	5				6				7				8				9			

Table 7.3.3.5.2-3 (columns 40-59): Physical resource allocation bitmap for DCI combination 2 (20 MHz)

N_{PRB}	40	41	42	43	44	45	46	47	48	49	50	51	52	53	54	55	56	57	58	59
BCCH-Even								▨	2	▨	▨	▨	▨							
BCCH-Odd								▨	0	▨	▨	▨	▨							
PCCH-Even								▨	▨	6	▨	▨	▨							
PCCH-Odd								▨	▨	4	▨	▨	▨							
RAR-Even								▨	▨	▨	10	▨	▨							
RAR-Odd								▨	▨	▨	8	▨	▨							
UE-Specific	🟩	🟩	🟩	🟩				▨	x	x	x	▨	▨				🟩	🟩	🟩	🟩
RBG's	10				11				12				13				14			

Table 7.3.3.5.2-3 (columns 60-79): Physical resource allocation bitmap for DCI combination 2 (20 MHz)

N_{PRB}	60	61	62	63	64	65	66	67	68	69	70	71	72	73	74	75	76	77	78	79
BCCH-Even													3							
BCCH-Odd													1							
PCCH-Even														7						
PCCH-Odd														5						
RAR-Even															11					
RAR-Odd															9					
UE-Specific	🟩	🟩	🟩	🟩	🟩	🟩	🟩	🟩	🟩	🟩	🟩	🟩	x	x			🟩	🟩	🟩	🟩
RBGs	15				16				17				18				19			

Table 7.3.3.5.2-3 (columns 80-99): Physical resource allocation bitmap for DCI combination 2 (20 MHz)

N_{PRB}	80	81	82	83	84	85	86	87	88	89	90	91	92	93	94	95	96	97	98	99
BCCH-Even																	Not Used			
BCCH-Odd																				
PCCH-Even																				
PCCH-Odd																				
RAR-Even																				
RAR-Odd																				
UE-Specific	🟩	🟩	🟩	🟩																
RBGs	20				21				22				23				24			

NOTE: Odd and even refer to slots.

7.3.3.6 UE-dedicated scheduling scheme in explicit mode

This scheme applies to:

1. *spatial multiplexing* MIMO configurations or
2. *transmit diversity MIMO configurations* and non-MIMO configuration where the normal mode scheduling scheme is inappropriate.

SS is configured with an exact TBS (modulation and coding scheme, I_{mcs}, and number of resource blocks, N_{prb}) to use. Other parameters, such as the HARQ process number and redundancy version to use for each transmission, are also configured by the TTCN. SS shall use TBS sheets with matching DCI format and Resource allocation Type. If the parameter 'FirstRbIndex' is configured different than specified in respective TBS sheet, the resource block bit maps in TBS sheet s are shifted by ' FirstRbIndex' and applied, with an exception for Resource allocation type 0 where only the full size 'Resource block groups' are shifted by ' FirstRbIndex'; if the last Resource block group is not full size, and is part of resource block bitmap, it is applied without any shift.

All data scheduled for a certain subframe shall be transmitted in the single indicated subframe, using configured parameters. The TTCN shall ensure that the configured parameters are consistent, in particular that the scheduled data size and the configured TBS match each other. Data scheduled by the prose, and hence also by the TTCN, provides possible space for the Timing Advance MAC control element and the RLC Status PDU. The SS shall include one of these if so triggered, else the bits reserved for these are filled by MAC padding.

Additionally, in the case of MIMO data scheduled for transmission in a given sub-frame, this consists of (listed in transmission priority order):

- MAC Control Elements that the SS needs to send (if triggered).
- AMD STATUS PDU(s) that the SS needs to send (if triggered).
- Fresh data scheduled for transmission in this subframe for one or more logical channels, as per logical channel priority [lower value = higher priority]; if data is available for more than one logical channel with the same priority, then the logical channel corresponding to the DRB-ID with the lower value has the higher priority.
- MAC padding.

The following additional rules need to be applied on data scheduled for transmission to be mapped on two transport blocks corresponding to two code words:

- Higher priority data (as stated above) maps on to Transport Block 1 and lower priority data maps on Transport Block 2 (if Transport Block 1 gets full); and
- Minimum MAC padding is performed in Transport Block 1; and
- If data from one logical channel needs to be mapped on to two transport blocks, the PDCP PDUs with lower PDCP sequence numbers get mapped on to Transport Block 1.

By default no data is scheduled in TDD special subframes (i.e. subframes 1 and 6 for default TDD subframe configuration). For testing DL data reception in TDD special subframe, explicit mode TBS selection shall be used. The

TTCN shall ensure that the configured parameters are consistent, in particular that the scheduled data size and the configured TBS match each other. As per TS36.213 [30] clause 7.1.7, for special subframe configuration 9 with normal cyclic prefix or special subframe configuration 7 with extended cyclic prefix, the actual Nprb used for TB size calculation will be a max(floor{ Nprb in DCI command *0.375},1). Tables 7.3.3.6-1/2 give the mapping for Nprb in DCI command and Nprb used for TB size determination.

Table 7.3.3.6-1: Nprb DCI to Nprb TBS mapping for 20 Mhz

Nprb in DCI command (configured by TTCN)	4	8	12	16	20	24	28	32	36	40	44	48	54	60
Nprb used for TBS determination	1	3	4	6	7	9	10	12	13	15	16	18	20	22

Table 7.3.3.6-1: Nprb DCI to Nprb TBS mapping for 5 Mhz

Nprb in DCI command (configured by TTCN)	4	6	8	12	14	16
Nprb used for TBS determination	1	2	3	4	5	6

7.3.3.6.1 DL Scheduling in Transport Block Size Selection Test Cases

The MAC transport block size selection test cases defined in clause 7.1.7 of TS 36.523-1 [1], use bandwidths of 10/15/20MHz. For the preamble and post amble in these tests, the default scheduling rules defined in clauses 7.3.3.1 to 7.3.3.4 for 10/10/20 MHz and DCI combination 1A are applied respectively. During the test body, when the actual TB sizes with appropriate DCI and resource allocation formats needed are to be tested, the SS is configured in explicit mode for UE-dedicated scheduling.

7.3.3.7 Resource allocation sheets

Attached with this Technical Specification, the DL resource allocation tables can be found, providing physical resource allocations for various transport block sizes, developed as per rules specified in clause 7.3.3, in Microsoft Excel format. Each individual sheet in the workbook represents various scheduling schemes as per table 7.3.3.7-1.

Table 7.3.3.7-1: DL resource allocation sheets

S. No	Sheet Name	Description
1	DCI-1A-PCCH	DL Resource scheduling for DCI format 1A and PDCCH is scrambled by P-RNTI (5 **MHz**, 10 **MHz**, 15 **MHz and** 20 MHz)
2	DCI-1A-BCCH	DL Resource scheduling for DCI format 1A and PDCCH is scrambled by SI-RNTI (5 **MHz**, 10 **MHz**, 15 **MHz and** 20 MHz)
3	DCI-1A-RAR	DL Resource scheduling for DCI format 1A and PDCCH is scrambled by RA-RNTI (5 **MHz**, 10 **MHz**, 15 **MHz and** 20 MHz)
4	DCI-1A-UE-Specific	DL Resource scheduling for DCI format 1A and PDCCH is scrambled by C-RNTI/ SPS C-RNTI/ Temp C-RNTI (5 MHz)
5	DCI-1A-3-IntraFreq-UE-Specific	DL Resource scheduling for DCI format 1A and PDCCH is scrambled by C-RNTI/ SPS C-RNTI/ Temp C-RNTI and three Intra Freq cells are configured (5 MHz)
6	DCI-1A-UE-Specific-10MHz	DL Resource scheduling for DCI format 1A and PDCCH is scrambled by C-RNTI/ SPS C-RNTI/ Temp C-RNTI (10 MHz)
7	DCI-1A-UE-Specific-20MHz	DL Resource scheduling for DCI format 1A and PDCCH is scrambled by C-RNTI/ SPS C-RNTI/ Temp C-RNTI (20 MHz) Also in preamble/postamble phase of MAC TBS test cases with 15 MHz bandwidth configured
8	DCI-1C-PCCH	DL Resource scheduling for DCI format 1C and PDCCH is scrambled by P-RNTI (5 MHz)
9	DCI-1C-BCCH	DL Resource scheduling for DCI format 1C and PDCCH is scrambled by SI-RNTI (5 MHz)
10	DCI-1C-RAR	DL Resource scheduling for DCI format 1C and PDCCH is scrambled by RA-RNTI (5 MHz)
11	DCI-1-UE-Specific	DL Resource scheduling for DCI format 1, Resource allocation 0

S. No	Sheet Name	Description
		and PDCCH is scrambled by C-RNTI/ SPS C-RNTI/ Temp C-RNTI (5 MHz)
12	DCI-1C-PCCH-10MHz-Gap1	DL Resource scheduling for DCI format 1C and PDCCH is scrambled by P-RNTI (10 MHz)
13	DCI-1C-BCCH-10MHz-Gap1	DL Resource scheduling for DCI format 1C and PDCCH is scrambled by SI-RNTI (10 MHz)
14	DCI-1C-RAR-10MHz-Gap1	DL Resource scheduling for DCI format 1C and PDCCH is scrambled by RA-RNTI (10 MHz)
15	DCI-1-UE-Specific-10MHz-Gap1	DL Resource scheduling for DCI format 1, Resource allocation 0 and PDCCH is scrambled by C-RNTI/ SPS C-RNTI/ Temp C-RNTI (10 MHz)
16	DCI-1C-PCCH-20MHz-Gap1	DL Resource scheduling for DCI format 1C and PDCCH is scrambled by P-RNTI (20 MHz)
17	DCI-1C-BCCH-20MHz-Gap1	DL Resource scheduling for DCI format 1C and PDCCH is scrambled by SI-RNTI (20 MHz)
18	DCI-1C-RAR-20MHz-Gap1	DL Resource scheduling for DCI format 1C and PDCCH is scrambled by RA-RNTI (20 MHz)
19	DCI-1-UE-Specific-20MHz-Gap1	DL Resource scheduling for DCI format 1, Resource allocation 0 and PDCCH is scrambled by C-RNTI/ SPS C-RNTI/ Temp C-RNTI (20 MHz)
20	DCI-1-RA0-ExplicitConfig	DL Resource scheduling for DCI format 1, Resource allocation 0 and PDCCH is scrambled by C-RNTI
21	DCI-1-RA1-ExplicitConfig	DL Resource scheduling for DCI format 1, Resource allocation 1 and PDCCH is scrambled by C-RNTI
22	DCI1A-ExplicitConfig	DL Resource scheduling for DCI format 1A, Resource allocation 2(localised & distributed) and PDCCH is scrambled by C-RNTI
23	DCI-2A-RA0-ExplicitConfig	DL Resource scheduling for DCI format 2A, Resource allocation 0 and PDCCH is scrambled by C-RNTI
24	DCI-2A-RA1-ExplicitConfig	DL Resource scheduling for DCI format 2A, Resource allocation 1 and PDCCH is scrambled by C-RNTI

7.4 Cell Configurations

7.4.1 Cell Configuration Types

Three cell configurations are defined in TS 36.508 [3] clause 6.3.3: Full Cell, Minimum Uplink Cell and Broadcast Only Cell; however the TTCN always considers all cells as Full Cells, and thus always provides the complete cell configuration parameters.

The SS may:

- always configure a cell as a 'Full Cell' based on the complete information; or
- configure the cell based on the 'CellConfig_Type' flag taking only the required configuration parameters and ignoring the others.

For a given value of the 'CellConfig_Type' flag, the TTCN shall:

- For Full Cell Configuration:
  - expect normal SS behaviour.
- For Minimum Uplink Cell Configuration:
  - Configure the SS to report Preamble detection.
  - Assign verdicts based on the PRACH Preamble Indications.
  - Consume any uplink SRB0 messages (if the SS is configured as a Full Cell).
- For Broadcast Only Cell Configuration:

- Not configure the SS to report Preamble detection.
- Consume any uplink SRB0 messages (if the SS is configured as a Full Cell).

7.4.2 Cell Power Change

To set and adjust the cell power at the two test ports, Reference Power and Attenuation, are provided in the record Reference Power.

The field Reference Power is only set when the cell is created and is not updated during the test case execution. The SS applies the Reference Power when the cell is fully configured.

To adjust the power level in the test case, the field Attenuation is used. After initial configuration of a cell the attenuation corresponds to the value "off". When the power is changed for more than one cell, the power changes must happen at the same time for all the cells according to the time instances for power level changes specified in TS 36.523-1 [1]. The time it takes to complete the power change for all the cells shall be done:

- within a maximum of 700 ms when changing the power of a cell from "off" to a certain value; or
- within a maximum of 100 ms (10 frames) otherwise.

When adjusting the power level in the test case, separate templates will be used in order to improve code readability.

The SS shall ensure the power level at the test ports conform to the required downlink signal levels specified in clause 6.2.2.1 of TS 36.508 [3].

7.4.3 E-UTRAN cell identity

7.4.3.1 Timing parameters of cells

For RRC and Idle mode test, the timing parameters in table 7.4.3.1-1 are applied. The specification of Cell 1 - Cell 30 can be found in TS 36.508 [3].

Table 7.4.3.1-1: Timing parameters of simulated cells

cell ID	**SFN offset**	**FDD Tcell (*Ts*)**	**TDD Tcell (*Ts*)**	
			Synchronous	**Non synchronous**
Cell 1	0	0	0	0
Cell 2	124	30720	154	30720
Cell 3	257	150897	77	150897
Cell 4	1000	61440	307	61440
Cell 6	657	524	77	524
Cell 10	129	43658	77	43658
Cell 11	957	92160	154	92160
Cell 12	1015	181617	154	181617
Cell 13	890	31244	154	31244
Cell 14	680	300501	77	300501
Cell 23	383	212337	154	212337
Cell 28	890	31244	154	31244
Cell 29	680	300501	77	300501
Cell 30	1015	181617	154	181617
NOTE:	For TDD, synchronous Tcell values are applied unless specified otherwise in the test cases.			

Table 7.4.3.1-2 is applied to the NAS test when more than one PLMN exists in a test case. Further cell parameters can be found in TS 36.508 [3], table 6.3.2.2-3.

Table 7.4.3.1-2: Timing parameters of simulated cells for NAS TCs in different PLMNs

cell ID	SFN offset	FDD Tcell (*Ts*)	TDD Tcell (*Ts*)	
			Synchronous	Non synchronous
Cell A	0	0	0	0
Cell B	124	30720	154	30720
Cell C	257	61440	307	61440
Cell D	1000	92160	154	92160
Cell E	752	32047	77	32047
Cell F	NA	NA	NA	NA
Cell G	957	631	77	631
Cell H	1015	31351	154	31351
Cell I	890	127200	77	127200
Cell J	680	1327	77	1327
Cell K	383	157920	154	157920
Cell L	562	188640	307	188640
Cell M	471	122880	307	122880
NOTE: For TDD, synchronous Tcell values are applied unless specified otherwise in the test cases.				

Figure 7.4.3.1-1 illustrates shifting DL transmission timing offset by Tcell = 1 subframe, between multiple NAS FDD cells on the same frequency (table 7.4.3.1-2) in the same PLMN.

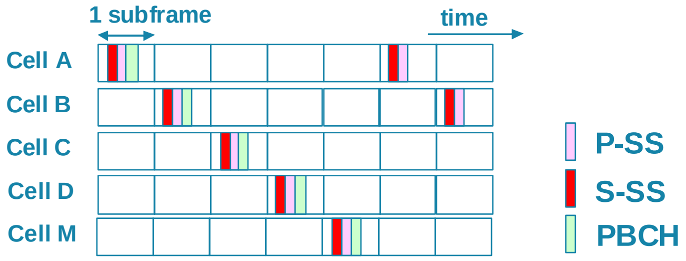

Figure 7.4.3.1-1: Timing offset between FDD cells on the same frequency

Figure 7.4.3.1-2 illustrates shifting DL transmission timing offset for three TDD cells operated on the same frequency (table 7.4.3.1-1) in the same PLMN.

Timing shift between synchronous Cell 0 and Cell 1: Tcell = 154 Ts (5 µs)

Timing shift between synchronous Cell 0 and Cell 2: Tcell = 307 Ts (10 µs)

Table 7.4.3.1-2 is applied to the NAS test when all NAS cells in a test case belong to the same PLMN. Further cell parameters can be found in TS 36.508 [3], table 6.3.2.2-2.

Table 7.4.3.1-2: Timing parameters of simulated cells for NAS TCs in same PLMN

cell ID	SFN offset	FDD Tcell (*Ts*)	TDD Tcell (*Ts*)	
			Synchronous	Non synchronous
Cell A	0	0	0	0
Cell B	124	30720	154	30720
Cell C	257	150897	77	150897
Cell D	1000	61440	307	61440
Cell E	NA	NA	NA	NA
Cell F	NA	NA	NA	NA
Cell G	NA	NA	NA	NA
Cell H	NA	NA	NA	NA
Cell I	NA	NA	NA	NA
Cell J	NA	NA	NA	NA
Cell K	NA	NA	NA	NA
Cell L	NA	NA	NA	NA
Cell M	471	31244	154	31244
NOTE: For TDD, synchronous Tcell values are applied unless specified otherwise in the test cases.				

Shifting radio frame transmission timing can eliminate the following interference between intra frequency cells:

- P-SS/S-SS to P-SS/S-SS, RS, PBCH, PCFICH, PDCCH and PHICH.
- PBCH to PBCH.
- PBCH to PCFICH, PDCCH and PHICH.
- PDSCH to PCFICH, PDCCH, PHICH.

As TDD UL and DL are on same frequency, to avoid interference between DL and UL, the Random Access Response Timing Advance (RAR TA) is related to the Tcell:

For TDD cells

```
RAR TA = FLOOR ((Tcell) mod 30720 / 16)
```

For FDD, the Random Access Response Timing Advance is set to 0.

In Carrier Aggregation signalling test cases, the SFN offset and Tcell of configured cells has to be same.

Editors note: More clarification in terms of tables representing configured cells may be needed. Cell 1, Cell 2, Cell3, Cell12 & Cell 6 are configured in CA test cases.

7.4.4 Cell configurations for NAS test cases

The default cell identifiers for NAS cells are defined in 36.508[3] clause 6.3.2.2.

The allocation of Physical layer cell identifiers to the individual cells is according to (*PCI mode 6*) being differential for the cells working on the same radio frequency. The way of PCI allocation can reduce the interference between the intra-frequency cells for reference signal to reference signal, PCFICH to PCFICH and PHICH to PHICH. The definition of Cell A - Cell M can be found in TS 36.508 [3].

7.4.5 Configuration of Multi-Cell Environment

When there is more than one EUTRA cell in a test case the following rules are applied in TTCN:

- At the beginning of the preamble, before initial attachment of the UE, all EUTRA cells are configured but switched off.
- In the preamble only the serving cell is switched on; all other cells remain switched off.
- At the end of the preamble the cells are configured according to the initial power level settings (T0) of the test case.

The mapping of cells to physical resources and management of the physical resources are out of TTCN scope. The following principles can be applied to the system simulator:

- Cells being switched off need not to be mapped to physical resources.
- When a cell is switched off mapping to a physical resource may be kept and reused when the cell is switched on again.
- When a cell is switched on it can either already been mapped to a physical resource or it needs to be mapped to a free resource.
- When there are less physical resources than cells it is up to SS implementation to find strategies to dynamically map the cells to the resources.

Independent from the strategies being used the system simulator shall obey timing restrictions for changing power-levels of one or several cells as stated in clause 7.4.2.

7.5 TDD Considerations

LTE options of FDD and TDD will be contained in the same common FDD and TDD test cases, similar to the prose in TS 36.523-1 [1].

The TDD Uplink-downlink configuration 1 in 3GPP TS 36.211 [35], table 4.2-2 is applied.

7.5.1 FDD vs. TDD implementation

FDD/TDD differences are introduced in the common FDD and TDD test cases using branches at a low level in the test case. The branches are used either:

- to assign a variable;
- to implement a different behaviour;
- to change an FDD or TDD parameter in a template sent to the UE or SS.

The mode under test (FDD or TDD) is based on the value of the bands under test.

7.5.2 Guideline for FDD vs. TDD verification

With respect to EUTRA FDD vs. TDD technologies, it is recommended that separate verifications for FDD and TDD are required for the TCs in TS 36.523-1 [1]:

- clause 6, 7, 8, 12, 13;
- with MultiRAT involved.

7.6 Special RLC Modes

7.6.1 Suppression of RLC Acknowledgements

Two different modes, both applicable per radio bearer, are defined as:

- General suppression:

  - If this mode is activated, no RLC acknowledgements will be generated by the SS. This mode can be switched on and will persist until it is switched off. Afterwards the SS will continue handling the RLC acknowledgements as normal.

- One time suppression:

  - If this mode is activated, no RLC acknowledgement will be generated by SS for the next RLC message data PDU received. Once this has been done, the SS continues handling RLC acknowledgements as normal.

In case of a handover the modes continue to be active.

7.6.2 Modification of VT(S)

This mode allows to manipulate the RLC state variable VT(S) so that the SS can generate an RLC sequence number as needed during a test. The input to the special test mode is an integer (0..1023) as value of ModifyVTS, The SS shall set variable VT(S) as follows:

VT(S):= ModifyVTS.

The purpose of this special test mode is to force an incorrect RLC sequence number to be used by the SS. Once VT(S) has been modified in the RLC entity at the SS side, this RLC entity will be inconsistent. One possibility to bring the RLC entity back to normal is to re-establish the RLC peer connection. This is done in the only use case of this special RLC test mode by performing an RRC Connection reconfiguration immediately after the test mode has been applied.

Users of this test mode should ensure that the RLC AM PDU carrying the incorrect sequence number will reach the peer RLC entity. It is therefore recommended to activate the RRC Connection reconfiguration only after some delay. This delay shall be short enough to ensure that the UE will not yet request the retransmission of the RLC PDU corresponding to the skipped sequence numbers.

7.7 System information

7.7.1 System information broadcasting

The rules for the transmission of BCCH messages are specified in TS 36.331 [19], clause 5.2. The current clause provides the implementation guidelines.

The ASPs SYSTEM_CTRL_REQ and SYSTEM_CTRL_CNF are used as interface to SS; the following rules apply:

- The complete system information is provided to SS by using a single ASP.

- SS starts scheduling all system information from the same SFN.

- The scheduling information sent to SS is the same as the scheduling information sent to the UE. For each SI message, the subframeOffset in SYSTEM_CTRL_REQ indicates the exact point in time in the SI window at which SS shall start the transmission of the related SI.

- SS shall set the systemFrameNumber in the MIB to the 8 most significant bits of the SFN. A dummy value is provided by TTCN.

- The system information is sent to SS using the asn.1 types, SS shall encode in unaligned PER and add the necessary padding bits as specified in TS 36.331 [19], clause 9.1.1.1.

- In the E-UTRAN-CDMA2000 Inter RAT configuration, SS shall set the CDMA2000 synchronousSystemTime in SystemInformationBlockType8 to the SFN boundary at or after the ending boundary of the SI-window in which SystemInformationBlockType8 is transmitted (see TS 36.331 [19], clause 6.3.4). The changes of synchronousSystemTime will not result in system information change notification, nor in a modification of systemInfoValueTag in SIB1 in TTCN as specified in TS 36.331 [19], clause 6.3.1. If 1xRTT is being tested, then SS shall overwrite the longCodeState1XRTT in SystemInformationBlockType8 to the state of long code generation registers in CDMA2000 1xRTT system as defined in C.S0002-A [12, Section 1.3] at $\lceil t/10 \rceil \times 10 + 320$ ms, where t equals to the *cdma-SystemTime*. The changes of longCodeState1XRTT will not result in system information change notification, nor in a modification of systemInfoValueTag in SIB1 in TTCN as specified in TS 36.331 [19], clause 6.3.1.

7.7.2 Scheduling information

The maximum number of resource blocks as defined in table 7.7.2-1 are used to broadcast the system information.

Table 7.7.2-1: Maximum number of resource blocks

	Maximum number of resource blocks assigned
SIB1	4
for all SIs	4

The subframe offset values used for SI messages are according to table 7.7.2-2.

Table 7.7.2-2: SubframeOffset values

Scheduling Information No. Acc to TS 36.508 [3], clause 4.4.3.1.2	subframeOffset (FDD)	subframeOffset (TDD)
SI1	1	0
SI2	1	0
SI3	3	15
SI4	7	15
SI5	7	15

All System Information messages are sent only once within the SI-window.

Table 7.7.2-3 (FDD) and 7.7.2-4(TDD) give the SFN's and subframe numbers in which the MIB, SI1, SI2, SI3, SI4 & SI5 are actually scheduled as per default parameters for si-WindowLength(20sf), periodicity for SI1(16), SI2(32), SI3(64) , SI4(64) and SI5(64) for bandwidths 5/10/15/20 MHz defined in TS 36.508 [3]:

Table 7.7.2-3: System Information Scheduling (FDD)

SFN\SUBFrame	0	1	2	3	4	5	6	7	8	9
0	MIB	SI1				SIB1				
1	MIB									
2	MIB	SI2				SIB1				
3	MIB									
4	MIB			SI3		SIB1				
5	MIB									
6	MIB					SIB1		SI4		
7	MIB									
8	MIB					SIB1		SI5		
9	MIB									
10	MIB					SIB1				
11	MIB									
12	MIB					SIB1				
13	MIB									
14	MIB					SIB1				
15	MIB									
16	MIB	SI1				SIB1				
17	MIB									
18	MIB					SIB1				
19	MIB									
20	MIB					SIB1				
21	MIB									
22	MIB					SIB1				
23	MIB									
24	MIB					SIB1				
25	MIB									
26	MIB					SIB1				
27	MIB									
28	MIB					SIB1				
29	MIB									
30	MIB					SIB1				
31	MIB									

SFN\SUBFrame	0	1	2	3	4	5	6	7	8	9
32	MIB	SI1				SIB1				
33	MIB									
34	MIB	SI2				SIB1				
35	MIB									
36	MIB					SIB1				
37	MIB									
38	MIB					SIB1				
39	MIB									
40	MIB					SIB1				
41	MIB									
42	MIB					SIB1				
43	MIB									
44	MIB					SIB1				
45	MIB									
46	MIB					SIB1				
47	MIB									
48	MIB	SI1				SIB1				
49	MIB									
50	MIB					SIB1				
51	MIB									
52	MIB					SIB1				
53	MIB									
54	MIB					SIB1				
55	MIB									
56	MIB					SIB1				
57	MIB									
58	MIB					SIB1				
59	MIB									
60	MIB					SIB1				
61	MIB									
62	MIB					SIB1				
63	MIB									
64	MIB	SI1				SIB1				
65	MIB									
66	MIB	SI2				SIB1				
67	MIB									
68	MIB			SI3		SIB1				
69	MIB									
70	MIB					SIB1		SI4		
71	MIB									
72	MIB					SIB1		SI5		

Table 7.7.2-4: System Information Scheduling (TDD)

SFN\SUBFrame	0	1	2	3	4	5	6	7	8	9
0	MIB, SI1					SIB1				
1	MIB									
2	MIB, SI2					SIB1				
3	MIB									
4	MIB					SIB1				
5	MIB					SI3				
6	MIB					SIB1				
7	MIB					SI4				
8	MIB					SIB1				
9	MIB					SI5				
10	MIB					SIB1				
11	MIB									
12	MIB					SIB1				
13	MIB									
14	MIB					SIB1				
15	MIB									
16	MIB, SI1					SIB1				
17	MIB									

SFN\SUBFrame	0	1	2	3	4	5	6	7	8	9
18	MIB					SIB1				
19	MIB									
20	MIB					SIB1				
21	MIB									
22	MIB					SIB1				
23	MIB									
24	MIB					SIB1				
25	MIB									
26	MIB					SIB1				
27	MIB									
28	MIB					SIB1				
29	MIB									
30	MIB					SIB1				
31	MIB									
32	MIB, SI1					SIB1				
33	MIB									
34	MIB, SI2					SIB1				
35	MIB									
36	MIB					SIB1				
37	MIB									
38	MIB					SIB1				
39	MIB									
40	MIB					SIB1				
41	MIB									
42	MIB					SIB1				
43	MIB									
44	MIB					SIB1				
45	MIB									
46	MIB					SIB1				
47	MIB									
48	MIB, SI1					SIB1				
49	MIB									
50	MIB					SIB1				
51	MIB									
52	MIB					SIB1				
53	MIB									
54	MIB					SIB1				
55	MIB									
56	MIB					SIB1				
57	MIB									
58	MIB					SIB1				
59	MIB									
60	MIB					SIB1				
61	MIB									
62	MIB					SIB1				
63	MIB									
64	MIB, SI1					SIB1				
65	MIB									
66	MIB, SI2					SIB1				
67	MIB									
68	MIB					SIB1				
69	MIB					SI3				
70	MIB					SIB1				
71	MIB					SI4				
72	MIB					SIB1				
73	MIB					SI5				

NOTE: Subframes 4 and 9 are avoided so as to facilitate availability of PDCCHs in the UE specific search space for transmission of PDCCH for both UL C-RNTI/SPS-RNTI and DL C-RNTI/SPS-RNTI/Temp C-RNTI.

7.7.3 System information modification

For system information modification, the same rules as defined in clause 7.7.1 are applied.

The SFN for the start of modification period is calculated by TTCN. The modified system information and the calculated SFN are provided in the ASP SYSTEM_CTRL_REQ.

7.7.3.1 Non-PWS System Information modification

The modification of system information is notified by paging messages containing the systemInfoModification. The paging messages are sent during one modification period before broadcasting the modified system information. The paging messages are sent on paging occasions (PO) within the paging frames (PF). With the default paging and sysinfo parameters provided in 36.508[3] PO is set to 9 for FDD and 0 for TDD.

7.7.3.1.1 UE in Idle_mode

When the UE is in idle mode, the paging frames calculation is based on the UE identity (see to TS 36.304 [14], clause 7). With:

defaultPagingCycle=128

nB=oneT

modificationPeriodCoeff=n4

it results in 4 paging messages to be sent on the paging occasions during the modification period in the frames of:

SFN mod 128 = (UE_ID) mod 128.

7.7.3.1.2 UE in connected mode

When the UE is in connected mode, paging messages are sent on the paging occasions of each frame within the paging cycle throughout a modification period. This results in 128*4 consecutive paging messages to be sent during the modification period.

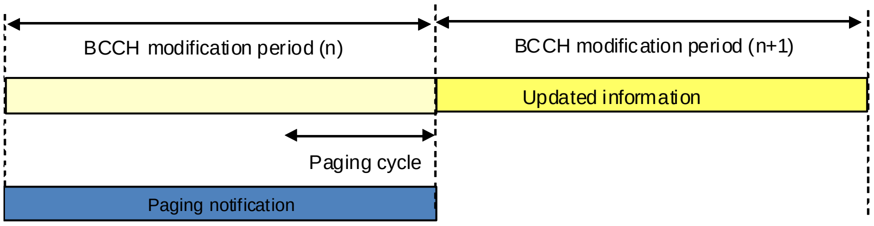
BCCH modification period (n)
BCCH modification period (n+1)
Updated information
Paging cycle
Paging notification

Figure 7.7.3.1.2-1: Paging notification UE in connected mode

For ETWS and/or CMAS capable UEs in connected mode, paging messages are sent on the paging occasions of each frame within the last paging cycle of the modification period. This results in 128 consecutive paging messages to be sent during the modification period.

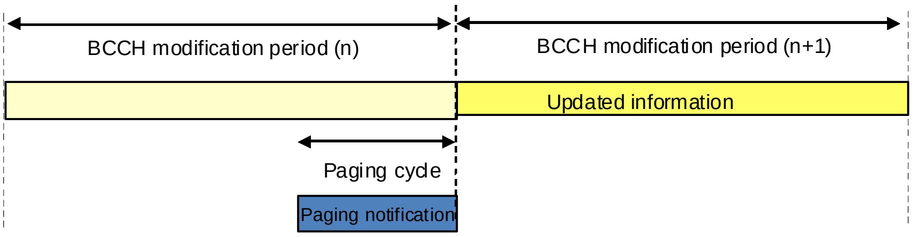
BCCH modification period (n)
BCCH modification period (n+1)
Updated information
Paging cycle
Paging notification

Figure 7.7.3.1.2-2: Paging notification for ETWS and/or CMAS capable UE in connected mode

7.7.3.2 PWS System Information modification

The modification of system information for ETWS and CMAS notification is notified by paging messages. The transmission of system information notification is not necessarily at the beginning of a modification period.

When the UE is in idle mode, the paging frames calculation is the same as defined in clause 7.7.3.1.1.

When the UE is in connected mode, paging messages are sent on the paging occasions of each frame during a paging cycle. This results in 128 consecutive paging messages to be sent. The transmission of the first paging message and the first system information notification are simultaneous and are sent at the beginning of a paging cycle.

7.8 Timers and Timing Restrictions

A timer is set at the beginning of each test case to guard against system failure. Behaviour on expiry of this guard timer shall be consistent for all test cases.

A watchdog timer can be specified for receive statements in order to reduce blocking time when a test case has already failed. Watchdog timers are a kind of TTCN auxiliary timer. When a watchdog timer is used to control a receive event, its expiry does not need to be handled explicitly in the test case, but will lead to a fail or inconclusive verdict due to handling in the default behaviour.

In idle mode operations, an idle mode generic timer is specified for receive statements if the test case specification does not explicitly specify a wait time for the specific test step or test purpose. The expiry of this idle mode generic timer is at least 6 minutes to safely cover most test scenarios.

The watchdog timer and the idle mode generic timer are only to be used inside the test case test body; if the timer expires a fail verdict is applied.

It is the TTCN responsibility to ensure that appropriate timer values are being used.

Tolerances (as described in TS 36.508 [3]) are not applicable to guard timers, idle mode generic timers and watchdog timers.

In general timers of less than 500 ms shall not be implemented by TTCN timers but controlled by usage of the timing information provided by the SS (This is based on an estimate of the system delay). To achieve this, there will be cases when a DL message is scheduled at a specific point in time. This shall be done by adding at least 100 ms to the current time.

If Timing is ‘now' the SS shall schedule the data transmission or the (re)configuration in the next available sub-frame, but will ensure that this period is less than 80 ms.

7.8.1 Auxiliary timers

For practical reasons, the TTCN can include timers that are not specified as part of the expected sequence. These timers are documented below.

RLC and PDCP watchdog timer.

7.8.2 RRC timers reconfiguration

Considering the allowed UE accuracy for the RRC timer T3xx being between 100 ms and 2.5 % of T3xx (see TS 36.133 [37]), the TTCN applies the RRC net timers tolerance as MAX (10% of T3xx, (100 ms + 5 RTT)), whereby:

FDD: 10 % of T3xx or 140 ms whichever is higher.

TDD: 10 % of T3xx or 155 ms whichever is higher.

7.8.3 MAC TA timer reconfiguration

Considering that the UE applies new values for MAC timers not before restart of the timer (see TS 36.321 [16], clause 5.8), when the TA timer is changed at the UE, a delay in TTCN will be added so as to allow SS to transmit

Timing advance MCE (based on current periodic Timing advance configuration) and hence resulting in restart of TA timer at UE with new value.

7.8.4 Non-protocol timers

Time durations or periods in the test specification without corresponding references in the core specifications are considered as non-protocol timers for which no timer tolerances are applied in the TTCN.

7.9 Error Indication

There are several situations on lower layer in which SS shall raise an error rather than trying to resolve the problem. This is done by sending a SystemIndicationError to the test case. SS shall raise an error in the following cases:

- HARQ retransmissions (applicable when SS is configured to indicate HARQ retransmissions as errors):
    - HARQ CRC error for UL data;
    - HARQ NACK from the UE unless SS is configured to report HARQ ACK/NACK.
- Paging, System information exceeds max. number of resource blocks.
- Configuration: max. number of resource blocks specified for a channel exceeds system bandwidth.
- When in User-Plane a DL PDCP PDU or SDU not fitting into one TTI is sent with Harq Process being explicitly specified.
- SS gets invalid TimingInfo for TDD from the test case.
- SS detects contradiction of UL grant(s) and TDD configuration.
- Data scheduled for the same TTI does not fit into an available transport block.

Further error conditions are specified in annex D.

7.10 Race Conditions

When two uplink messages are sent from the UE within a very small amount of time, they may be received in either order in the TTCN if they are received on different ports. This may cause a race condition which is due to the snapshot mechanism in TTCN. In these cases, the TTCN will accept the messages in either order and then compare the timestamps of both messages to ensure they were sent in the correct order.

For UL messages received at a single port, there are normally no race conditions, with the exception of the SRB port where the following rules shall be fulfilled, in order to achieve an ordered UL message queue:

- UL messages are queued according to the timing information.
- UL messages with the same timing information are queued according to the logical channel priority with the "higher-first-in" principle.

7.11 Radio Link Failure

A radio link failure shall be triggered by switching the downlink power level of the source cell to the value for non-suitable "Off" for the time period of least T310 + time it takes to receive N310 consecutive out-of-sync indications from lower layers (non-suitable "Off" is defined in TS 36.508 [3], whereas T310 and N310 are defined in TS 36.331 [19]).

If the RRC re-establishment procedure is used in a radio link failure context, it shall be realised by using two cells.

7.12 Test method for RRC signalling latency

Test cases testing RRC signalling latency will need special test method. The PUCCH synchronisation state of UE influences the test method. Following 2 different ways in which the UE's completeness of procedure can be probed are considered:

1. UE is still PUCCH synchronized and can respond to uplink grants.
2. UE needs a RACH procedure and hence RACH procedural delays add upon the actual procedure delay.

7.12.1 Procedure delays in PUCCH synchronized state

For latency tests there may be up to 4 HARQ retransmissions in DL (corresponding to the default configuration of the SS) but HARQ retransmissions in UL cannot be compensated , i.e. any HARQ error in UL shall result in an inconclusive verdict for the test case (otherwise a UE may get fail due to a HARQ error).

Figure 7.12.1-1 demonstrates the latency check procedure that will be applied when UE is in PUCCH synchronized state and can respond to uplink grants.

SS is configured to report ACK/NACK received from UE, to TTCN.

NOTE: Due to L2 signalling (e.g. RLC STATUS PDUs) it is necessary to limit the reporting of UL HARQ ACK/NACK to the time between sending of the RRC message and receiving the ACK.

By default SS is configured to retransmit any DL MAC PDU max 4 times.

To avoid unexpected side effects the Time Alignment timer needs to be set to infinity and the SS shall be configured to not send any Timing Advance MAC control elements during the latency tests (since this may result in additional ACK/NACK)

The SS shall be configured to report HARQ errors and in the case of an UL HARQ error, an inconclusive verdict is assigned.

In the case of HARQ retransmissions in DL the HARQ RTT Timer according to TS 36.321 clause 7.7 [16] is

- 8 for FDD
- 10 for TDD configuration 1 in case the DL PDU is sent in subframe 4 (as per default; see Table 7.12.1-1).

The SS shall schedule DL retransmission at 4th FDD TTI for FDD or 6th TTI for TDD since reception of the NACK.

Let N be the max allowed delay for procedure.

TTCN schedules at time T1 a DL message to the UE.

TTCN schedules UL grants at

$T_2(k) = T_1 + N + \Delta_1 + k * RTT;$

with
k = 0..4; number of HARQ retransmission in DL
RTT = 8 (FDD)
RTT = 10 (TDD)
$\Delta_1 = 0$ (FDD)
$\Delta_1 = 0..3$ (TDD; possible UL subframe uncertainty since not all subframes can be used for UL)

Example:
given TDD; DL PDU sent at subframe 4; N=19
$\Rightarrow \Delta_1 = 1$ since UL grant cannot be scheduled for subframe 3 but needs subframe 4 too

The UL data is sent by the UE at

$T_3(K) = T_2(K) + 4 + \Delta_2$ with $\Delta_2 = 0$ for FDD and $\Delta_2 = 0..3$ for TDD and K is the value of k corresponding to which a HARQ Ack is received

The latency requirements are fulfilled when

$$T_3(K) - T_1 = N + 4 + \Delta_1 + \Delta_2 + K * RTT$$

Looking at TDD configuration 1 in detail it can be shown that $\Delta = \Delta_1 + \Delta_2 = 0 .. 3$

$$\Rightarrow T_3(K) - T_1 = N + 4 + \Delta + k * RTT; \text{ with } \Delta = 0 .. 3$$

NOTE:
as long as N is a multiple of 5ms even for TDD configuration 1 we get $\Delta = 0$

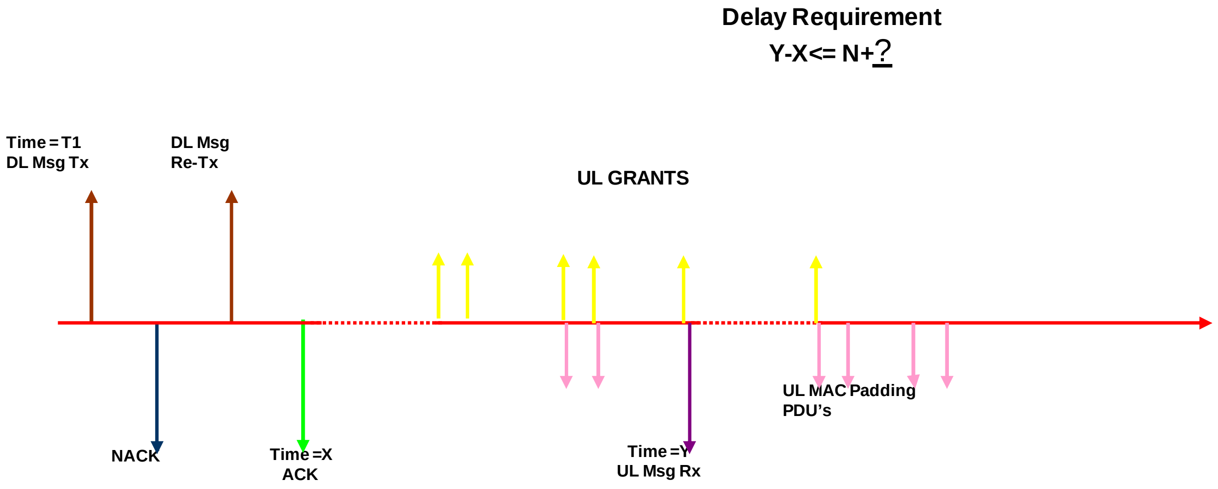

Figure 7.12.1-1: Delays in PUCCH synchronized state

Table 7.12.1-1: TDD configuration 1

Subframe	0	1	2	3	4	5	6	7	8	9
Configuration 1	D	S	U	U	D	D	S	U	U	D
Delay from DL to Ack/Nack [TTIs]			6,7	4				6,7	4	
Delay from NCK to re tx [TTIs]			4	6				4	6	
RTT	11	10			10	11	10			10

7.12.2 Procedure delays when RACH procedure required

Figure 7.12.2-1 demonstrates the latency check procedure that will be applied when UE is not PUCCH synchronized state needs RACH procedure.

PRACH configuration index is set as 14 for FDD, 12 for TDD which allows UE to send Preamble in any frame at any subframe.

SS is configured to report ACK/NACK, PRACH preambles received from UE.

By default SS is configured to retransmit any DL MAC PDU max 4 times [1 Transmission and 4 Retransmission].

Let N be the max allowed delay for procedure.

TTCN schedules at time T1, DL message to the UE. This is achieved using Time stamps in send ASP's.

The time difference between the ACK and the reception of PRACH preamble will be checked against N plus any Interruption time (TS 36.133 [37]) and verdict is assigned, when (Y-X) <= N + Tinterrupt + Δ:

Δ = 0 for FDD;

Δ = 3TTI for TDD, where 3TTI is UL subframe uncertainty.

If cell change occurs, cell timing differences, Frame number offsets need to be included for procedural delay evaluations.

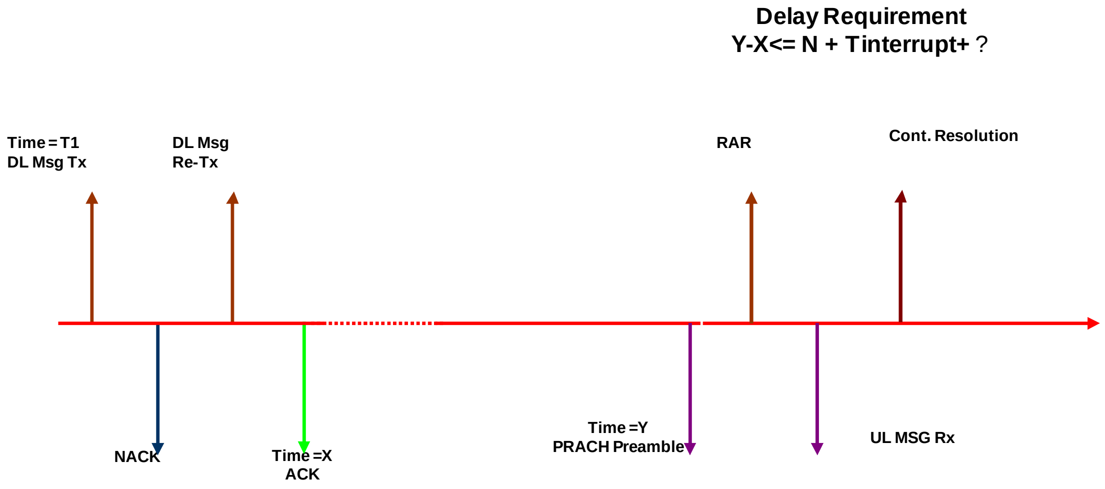

Figure 7.12.2-1: Delays when RACH procedure needed

7.13 RLC test method for scheduled data

The test loop mode is applied to the RLC tests. The allowed SS delay for sending data (< 80 ms) is comparable to the default values of the RLC timers. In order to ensure a unique TTCN implementation of the RLC test cases and the deterministic test result, independent from the SS platforms and UEs, scheduled data method can be applied to the test.

The scheduled data method is suitable to the RLC test if:

Receiving multiple UL RLC SDUs is expected in the test; the UE may send a STATUS PDU in addition.

Time measurement is required for the looped back RLC SDUs.

DL RLC PDUs are sent on consecutive TTIs; the subframe numbers to be applied are relevant in TDD.

Table 7.13-1 illustrates the data scheduling in the RLC test.

Table 7.13-1: Scheduled RLC test events

Scheduled timing		t0 (see note 1)	t1 (see note 1)	t2
Test event descriptions	Multiple SDUs	Obtain the reference time	Send DL data	Provide UL grant (see note 2)
	Time measurement		Send DL data	Receive UL data
	DL data in TDD		Send 1st DL data	Send subsequent data (see note 3)
NOTE 1: (t1-t0) ≥ 100 ms which is greater than the allowed SS max. delay time, 80 ms. NOTE 2: (t2-t1) = 60 ms, this duration will allow the UE transmitting max. 3 scheduling requests (every 20 ms once) after the UL data to be looped back being available at the UE without going onto PRACH. NOTE 3: The applied TDD subframe numbers 4, 5, 9, 10, 14, 15, 19, 20, 24, 25, ...				

If the test case prose does not indicate timely restrictions for the scheduling, sequential sending events are scheduled in consecutive TTIs.

NOTE 1: For TDD configuration 1, the subframes 0, 4, 5 and 9 are considered as consecutive.

NOTE 2: Scheduling may imply to execute the test steps in the TTCN in an order different from the order given in the test case prose. However, the sequence of the events over the air follows the prose description.

7.14 IP packets for Loopback Mode

7.14.1 IP packets used for Loopback Mode A

It is irrelevant which kind of data is used in loopback mode A. Some PDCP test cases however specify to use IP packets. In these cases, an ICMPv4 ECHO REPLY shall be used with a valid IP header checksum and valid ICMP checksum.

7.14.2 IP packets used for Loopback Mode B

According to TS 36.509 [4], the UE performs loopback mode B above the UL TFT entity. Therefore IP packets need to match the packet filters signalled to the UE according to TS 36.508 [3], clause 6.6.2:

When the UE gets configured via NAS signalling with packet filter #1 and #2 according to TS 36.508 clause 6.6.2 the IP packets shall fulfil the following requirements:

Protocol:

UDP referred to packet filter #1 and #2

IP addresses:

Referred to TS 36.508 [3], table 6.6.2-3, note 1 source and destination IP address are the same.

Ports:

packet filter #1 specifies DL filter ⇒ IP packet's source port shall match remote port of packet filter #1.

packet filter #2 specifies UL filter ⇒ IP packet's destination port shall match remote port of packet filter #2.

To summarize, on dedicated bearers for loopback mode B, UDP packets used shall match the packet filters configured at the UE side. The UDP packets, having no specific content, shall have the correct header checksum and UDP checksum. On the default bearer, any other packets can be used, as an example, ICMPv4 ECHO REPLY similar as for loopback mode A.

7.15 Connected Mode DRX

The SS shall support connected mode DRX according to TS 36.321 [16], i.e. the SS shall not send any data to the UE while the UE is not monitoring the PDCCH. To achieve this, the SS needs to estimate the UE's Active Time by considering the on-duration as well as the drx-inactivity timer:

on-duration:

The on-duration can be derived from the SS' DRX configuration.

drx-inactivity timer:

According to TS 36.321 [16], clause 5.7 at the UE the drx-inactivity timer is started or restarted during the Active Time whenever PDCCH indicates a new transmission (DL or UL).

There is no activation time for the configuration of DRX at the UE and it is not acceptable just to consider the on-duration after re-configuration of the UE (for DRX_L according to TS 36.508 [3] the DRX cycle is 1.28 s); instead the drx-inactivity timer needs to be taken in account after DRX reconfiguration as well.

The following rules shall be applied to achieve synchronisation of SS and UE:

1. SS shall consider drx-inactivity timer as restarted at the UE whenever the UE is addressed on the PDCCH (DL data or UL grant).

2. When there is a scheduling request sent by the UE, SS assigns a grant independent of DRX;
   when sending out that grant on PDCCH SS considers drx-inactivity timer as (re-)started (as per 1. above).

3. For all DL messages scheduled with specific timing information SS shall send the data at the given time irrespective of current DRX configuration.

4. DRX (re-)configuration:

   a) when DRX has not been configured at the UE yet:

      a1) TTCN will configure the SS just before the sending out the RRCConnectionReconfiguration message configuring DRX at the UE; no other send-events between the reconfiguration of the SS and sending the RRC message shall be scheduled in TTCN.

      a2) TTCN will schedule sending of the RRCConnectionReconfiguration message configuring DRX with specific timing information.

   b) Reconfiguration of DRX at the UE: Same as a) but:

      b1) TTCN shall schedule sending of the RRCConnectionReconfiguration according to the old DRX configuration (i.e. the SS does not need to cache the new configuration).

   c) RRC connection release:

      c1) TTCN will release DRX at the SS just after the RRC connection release procedure.

5. There shall be no parallel data on any DRBs during DRX reconfiguration.

NOTE: Timing requirements in the DRX test cases:

a) The drx-Inactivity Timer shall be long compared to the duration between sending RRCConnectionReconfiguration and receiving RRCConnectionReconfigurationComplete (> 50 ms). It ensures the SS in-time sending of the RLC STATUS PDU.

or

b) The drx-cycle shall be short compared to the RLC timers applied for SRB1.

Figure 7.15-1 illustrates DRX (re)configuration at the SS and the UE.

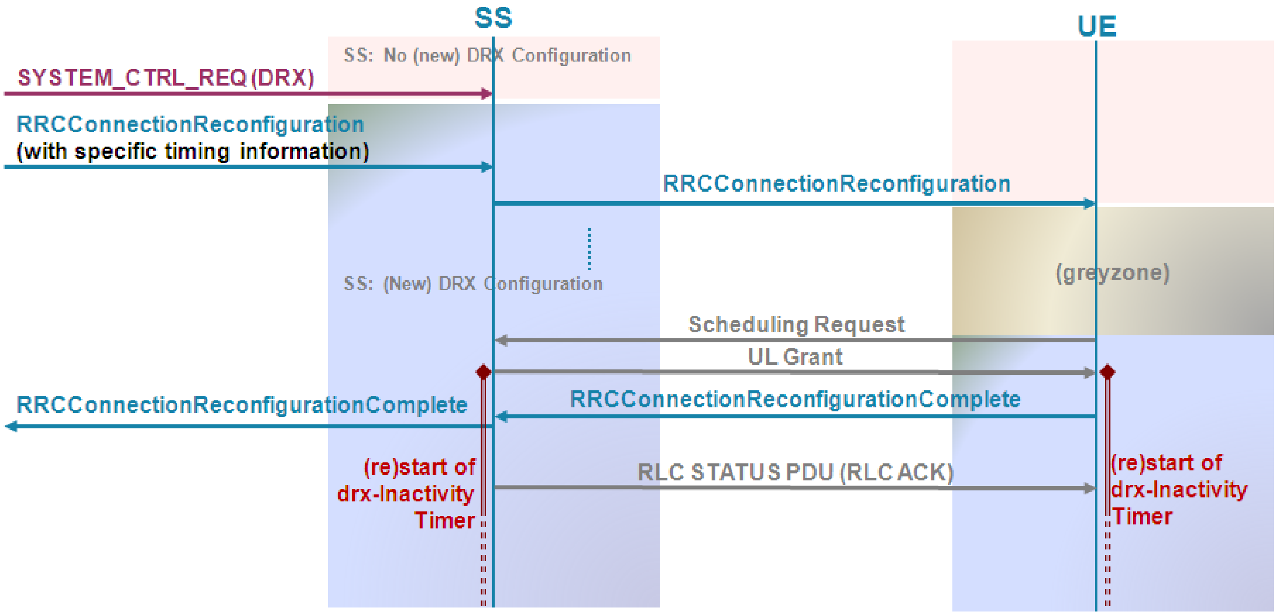
SS
UE
SS: No (new) DRX Configuration
SYSTEM_CTRL_REQ (DRX)
RRCConnectionReconfiguration
(with specific timing information)
RRCConnectionReconfiguration
SS: (New) DRX Configuration
(greyzone)
Scheduling Request
UL Grant
RRCConnectionReconfigurationComplete
RRCConnectionReconfigurationComplete
(re)start of
drx-Inactivity
Timer
RLC STATUS PDU (RLC ACK)
(re)start of
drx-Inactivity
Timer

Figure 7.15-1: DRX (Re)configuration

NOTE 1: Between RRCConnectionReconfiguration and RRCConnectionReconfigurationComplete the UE may send a separate RLC STATUS PDU to acknowledge the RRCConnectionReconfiguration, but that does not affect the principle as long as SS applies rule 2.

NOTE 2: During the "greyzone" SS does not know about DRX configuration at the UE; during that period according to rule 4a1 and rule 5 there is no data to be sent by SS.

The TTCN (re)configures the connected mode DRX in SS for the test cases if DRX_S is applied (Ref. TS 36.508 [3]. The (re)configuration of DRX_L in SS is FFS.

For test case 7.1.6.1 and 7.1.6.2, DRX will not be activated at the SS. Periodic UL grants every 5ms (suitable for both FDD and TDD and less than drx-InactivityTimer 6ms) will be allocated to the UE during the steps configuring test case specific DRX parameters of the test case to prevent UE from activating DRX; These grants may result in padding MAC PDU's transmitted by UE, which will be received by SS MAC and discarded.

7.16 Handover Sequences

7.16.1 Sequence of inter-cell handover

In general, the Inter-Cell handover is done without activation time, i.e. the timing information for configuration of the SS and sending of the RRCConnectionReconfiguration is ‘Now'.

1. Transfer of the PDCP Count for AM DRBs from source to target cell:
    a) Source Cell: Get PDCP COUNT.
    b) Target Cell: Set PDCP COUNT.

NOTE 1: There shall be no further sending/receiving of AM DRB data before the HO has been done.

2. Target Cell: Inform the SS about the HO and about the source cell id.
3. Target Cell: Configure RACH procedure either dedicated or C-RNTI based.
4. Target Cell: Activate security.

NOTE 2: For AM DRBs the PDCP count is maintained (for SRBs and UM DRBs the PDCP count is reset).

5. Target Cell: configure DRX and measurement gap configuration (if necessary).

NOTE 3: As long as the DRX configuration is not modified by the RRCConnectionReconfiguration the target cell gets the same DRX configuration as the source cell.

NOTE 3A: According to TS 36.331 clause 5.5.6.1 the measurement gap configuration is released at the UE due to the handover, therefore nothing needs to be configured at the target cell regarding measurement gaps unless a new measurement gap configuration is explicitly given in the RRCConnnectionReconfiguration.

6. Source Cell: Stop periodic TA.

NOTE 4: Unless explicitly specified UL grant configuration keeps configured as per default at the source cell.

7. Target Cell: Configure UL grant configuration ("OnSR", periodic TA is not started).
8. Source Cell: Send RRCConnectionReconfiguration.
9. Target Cell: Receive RRCConnectionReconfigurationComplete.
10. Target Cell: Start periodic TA.
11. Target Cell: Inform the SS about completion of the HO (e.g. to trigger PDCP STATUS PDU).
12. Target Cell: Re-configure RACH procedure as for initial access.
13. Source Cell: Reset SRBs and DRBs.

14. Source Cell: Release DRX and MeasGapConfig configuration.

7.16.1a Sequence of inter-cell CA handover (more than one CC before and after handover)

The Inter-Cell handover is done with activation time, i.e. the timing information for configuration of the SS and sending of the RRCConnectionReconfiguration is explicit. Time 'T' is a future time and time T1 = T + 40 ms.

At Time T , steps 1-3:

1. Source Pcell: Configure source primary cell for stop of automatic Time alignment MCE transmission by SS
2. Target Pcell: Configure target pcell for no RACH response transmission
3. Source Pcell: Schedule the transmission of RRC Connection Reconfiguration message to UE requesting Handover to target Pcell and Scell

At time T1, steps 4-12:

4. Target Pcell: If target Pcell is same as source Scell, configure SS for target Pcell to be converted from a Scell to Pcell
5. Transfer of the PDCP Count for AM DRBs from source to target Pcell:
    a) Source PCell: Get PDCP COUNT.
    b) Target PCell: Set PDCP COUNT.

NOTE 1: There shall be no further sending/receiving of AM DRB data before the HO has been done.

6. Target PCell: Inform the SS about the HO and about the source Pcell id.
7. Target PCell: Configure RACH procedure either dedicated or C-RNTI based.
8. Target PCell: Activate security.

NOTE 2: For AM DRBs the PDCP count is maintained (for SRBs and UM DRBs the PDCP count is reset).

9. Target PCell & Target Scell: configure DRX and measurement gap configuration (if necessary).

NOTE 3: As long as the DRX configuration is not modified by the RRCConnectionReconfiguration the target cell gets the same DRX configuration as the source cell.

NOTE 4: According to TS 36.331 clause 5.5.6.1 the measurement gap configuration is released at the UE due to the handover, therefore nothing needs to be configured at the target cell regarding measurement gaps unless a new measurement gap configuration is explicitly given in the RRCConnnectionReconfiguration.

10. Target PCell: Configure UL grant configuration ("OnSR", periodic TA is not started).
11. Target PCell: Configure Target Pcell as Pcell.
12. Target SCell: Configure Target Scell for
    12.1 Configure RACH procedure C-RNTI based.
    12.2 Configure UL grant configuration ("OnSR", periodic TA is not started).
    12.3 Configure target SCell as Scell with new Pcell association
13. Target PCell: Receive RRCConnectionReconfigurationComplete
14. Target PCell: Start periodic TA.
15. Target PCell: Inform the SS about completion of the HO (e.g. to trigger PDCP STATUS PDU).
16. Target PCell: Re-configure RACH procedure as for initial access.

17. Source PCell: If source Pcell is not target Scell, reset SRBs and DRBs.

18. Source Pcell: If source Pcell is not target Scell, configure from Pcell to normal cell

19. Source SCell: If source Scell is neither target Pcell or Scell, Release DRX and MeasGapConfig configuration.

20. Source Scell: If source Scell is neither target Pcell or Scell, configure from Scell to normal cell

21. Source Scell: If source Scell is neither target Pcell or Scell, Configure UL grant configuration ("OnSR", periodic TA is not started).

7.16.2 Sequence of intra-cell handover

For Intra-Cell handover dedicated timing information is used: the sequence starts at time T with sending of the RRCConnectionReconfiguration. T is set to 300 ms in advance of the handover.

0. Before T: Get PDCP count for AM DRBs.

1. At T: Send RRCConnectionReconfiguration.

2. At T + 5ms: Release SRBs and DRBs.

3. At T + 5ms: Configure RACH procedure either dedicated or C-RNTI based.

NOTE 1: Since the RACH procedure may require a new C-RNTI to be used it cannot be configured before sending out the RRCConnectionReconfiguration.

3A At T + 5ms: Release MeasGapConfig configuration.

NOTE 2: According to TS 36.331, clause 5.5.6.1 the measurement gap configuration is released at the UE due to the handover, therefore MeasGapConfig is released unless a new measurement gap configuration is explicitly given in the RRCConnectionReconfiguration.

4. At T + 10ms: (Re-) configure SRBs and DRBs.

5. At T + 10ms: Reestablish security, disable TA transmission.

NOTE 3: For AM DRBs the PDCP count is maintained while for SRBs and UM DRBs the PDCP count is reset.

6. (after step 5) Receive RRCConnectionReconfigurationComplete.

7. (after step 6) Re-configure RACH procedure as for initial access, enable TA transmissions.

8. (after step 7) Restore the PDCP count for AM DRBs.

7.16.3 UL Grants used in RA procedure during handover

In the Random Access Procedure a grant is assigned to the UE by the Random Access Response and another grant, as initial grant, is assigned for contention resolution.

When UL data is pending, the UE will try to put as much data into given grants as possible, i.e. it will segment the user data and send it e.g. with the initial grant if possible. To avoid this segmentation of user data, the grants assigned during handover will be set in TTCN to:

Grant assigned by Random Access Response:	56 bits.
Initial grant:	104 bits.

NOTE 1: According to TS 36.321 [16], clause 5.1.4, 56 bits are the minimum grant which can be assigned by the Random Access Response. That is sufficient to convey C-RNTI (3 bytes) and short BSR (2 bytes) or long BSR (4 bytes) but even with short BSR the remaining 2 bytes are not sufficient to convey any segment of the RRCConnectionReconfigurationComplete (at least 4 bytes).

NOTE 2: The RRCConnectionReconfigurationComplete (9 bits) shall completely be conveyed in the initial grant of RA procedure. This requires a minimum of 10 bytes (1 byte MAC header + 2 bytes RLC header + 5 bytes PDCP header + 2 bytes payload). Additionally an optional PHR MAC element (2 bytes) needs to be considered since the PHR has higher priority than the MAC SDU. Any further user data would require a minimum of 5 additional bytes (2 bytes MAC header + 2 bytes RLC header + 1 byte payload).

7.17 Simulation of PDCP MAC-I Failure in UE

PDCP integrity protection test cases 7.3.4.x have the requirement to trigger MAC-I failures in UE for downlink messages; to achieve the MAC-I failure in UE two methods are specified in the subsequent sub clauses.

7.17.1 Integrity and ciphering not yet activated

UE has not yet started Integrity protection and it is required to trigger MAC-I failure for the PDCP PDU carrying RRC SecurityModeCommand starting integrity with one of integrity protection algorithms. Further a conformant UE will respond with SecurityModeFailure without any integrity protection.

This is achieved by:

Not configuring SS PDCP to start integrity and ciphering with selected algorithm.

RRC SecurityModeCommand is sent indicating Integrity protection through the desired algorithm.

Normal behaviour of PDCP layer in SS will include all zeros in MAC-I.

This results in MAC-I failure as UE will calculate the XMAC-I with indicated algorithm.

7.17.2 Integrity and/or ciphering already activated

UE has started Integrity protection (ciphering configured with possibly non null algorithm) and it is required to trigger MAC-I failure for the PDCP PDU carrying an RRC UECapabilityEnquiry message. A conformant UE will trigger an RRCConnectionReestablishment procedure.

This is achieved by:

Configuring SS PDCP to use a different Integrity algorithm other than used by UE (i.e. if UE is configured to use AES, SS is configured to use SNOW3G and vice versa).

Ciphering is configured at SS side same as in UE side.

The MAC-I included by SS PDCP will be as per new algorithm.

UE will calculate XMAC-I based on its own algorithm which is different from the algorithm SS has used and will result in MAC-I failure.

7.18 RRC Connection Release Sequence

According to TS 36.331 [19], clause 5.3.8.3, after reception of the RRCConnectionRelease the UE may either wait 60 ms or for indication of acknowledgement from lower layer. After the RRC connection release there are cases where the UE may immediately come up with an RRC connection request. This requires scheduled release of resources at the SS:

1. At T: Send RRCConnectionRelease, stop UL grants.
2. At T + 5ms: Release security.
3. At T + 10ms: Release DRX configuration at the SS.

3A At T + 15ms: Release measurement gap configuration at the SS.

4. At T + 50ms: no action.

5. At T + 55ms: Release SRBs and DRBs.
6. At T + 60ms: (Re-) configure SRBs and DRBs.
7. Delay of 840ms (NOTE)

T is set to 300ms in advance of RRC connection release.

NOTE: The delay ensures that the UE is camping on the serving cell again to avoid side effects e.g. due to subsequent power level changes. It does not affect any sending of messages by the UE. The delay 840ms is chosen to ensure the UE is re-camping on the cell and has read relevant system information, MIB, SIB1, SIB2 and all other SIs.

7.19 DL CCCH Message and Contention Resolution MAC Control Element transmission in one MAC PDU or in separate MAC PDUs

When the contention based RACH procedure is being executed (RRC Connection Establishment or RRC Connection Reconfiguration), in general the contention resolution MAC control element and the DL RRC PDU (RRC Connection Setup/RRC Connection Reject/RRC Connection Re-establishment/RRC Connection Re-establishment Reject) are sent in one MAC PDU. This is achieved by pre-configuring the SS (before the start of the RRC procedure) to send the encoded DL message and contention resolution MCE in one MAC PDU.

Nevertheless, due to specific test purposes there are still many cases where it is necessary to send the DL CCCH message separately:

RRC connection establishment

When RRC connection establishment is part of the test purpose

Special cases: , e.g. when no contention resolution shall be sent according to the test purpose

RRC Connection Reestablishment is part of the test purpose

RRC Connection Reject is part of the test purpose

RRC Connection Reestablishment Reject is part of the test purpose

NOTE: The way contention resolution is applied has impact on the DCI format being used in a test case: when the DL CCCH message is sent separately DCI combination 1 according to clause 7.3.1 shall be used.

7.20 RRC Connection Reconfiguration Sequence (Measurement Control)

When an RRC Connection Reconfiguration message contains information to configure measurement gaps at the UE according to TS 36.331 [19] clause 5.5.2.9, the SS needs to be configured accordingly:

IF MeasConfig contains measGapConfig:

1. At T: Send RRC Connection Reconfiguration.
2. At T + 5ms: Configure measurement gaps at the SS.
3. (after step 2) Receive RRC Connection Reconfiguration Complete

ELSE

1. Send RRC Connection Reconfiguration (without scheduling)
2. Receive RRC Connection Reconfiguration Complete.

T in general is set to 100ms in advance of the RRC connection reconfiguration.

7.21 GERAN special issues

7.21.1 Timeslot assigned for GERAN CS traffic

Timeslot 3 shall be used as the timeslot assigned for GERAN CS traffic, in order to avoid conflicts with timeslots reserved for other purposes (e.g. the GPRS channel which is assigned to timeslot 4).

7.21.2 Subchannel used in GERAN L2 access message

The subchannel is valid only for the following logical channel types: FACCH/H, SDCCH/8, SDCCH/4. For other logical channel types this field is not applicable and shall be coded as 15 for compatibility with TTCN2 test cases. The SS shall ignore it if this field is coded as 15.

7.22 EUTRAN RSRQ Calculations

7.22.1 Assumptions

- As per 36.214[53] clause 5.1.1 and 5.12, the RSRP and RSSI shall be averaged over the same set of resource blocks. It is assumed that the power calculations made over one symbol are good enough for RSRQ calculations. This is based on the assumption that the power levels remain the same across the symbols on which the UE is calculating the average. The contribution of Nprb and the OFDM symbols carrying cell specific reference symbols per PRB contribute equally in numerator and denominator, hence RSRQ calculations in dB with aggregation over cell DL bandwidth and without aggregation result in the same output.
- As per table 7.4.3.1.1-1, for FDD the timing offset between the intra frequency cells is always a multiple of sub frame duration i.e. 3072 Ts, hence in the symbols carrying cell-specific reference signals in one cell, the other cell (interference) is also carrying a cell-specific reference signal, even though in a different subframe. Hence from an interference calculation perspective, we can safely assume that the cells contributing an interference shall also transmit the same cell specific reference signal in the symbol/
- The noise source is treated as a dummy cell transmitting on all resource elements with equal EPRE. Hence to switch off the noise source, a value of non-suitable "Off" cell, as per 36.508[3] table 6.2.2.1-1 shall be used (<-145), and the signal level uncertainties similar to configured cells in 36.508[3] clause 6.2.2.1 will also be applied to the noise source.

7.22.2 The Ideal Calculation

The test case specifies the RS-EPRE (dBm/15kHz) which is the cell absolute power-cell attenuation in dBm per carrier of 15 kHz; the linear average over few measurements will give the RRP value.

It is assumed that the power levels of all contributors is fluctuating hence in the typical test environment RS-EPRE will be the RSRP over a single carrier frequency.

The RS-EPREmW(mW/15kHz) = 10 power (RSRP/10).

The energy in noise source [Noc] for the frequency is also specified in the same units of dBm/15kHz.

The RSSImW calculation(mW over a resource block frequency of 180 kHz) = 2 (the sum over all intra frequency configured cells RS-EPREmW) + 10 power ((Noc/10)*12.

The cell inference is multiplied by 2 as in a RB, cell specific reference is transmitted in only 2 carriers. But the AWGN transmits on all 12 carriers in the resource block.

The RQRQ in dB will be the 10*log (RS-EPREmW/RSSImW).

7.22.3 Additional RSRQ Calculations For Fixing Boundary Values

In addition to the ideal calculation, various RSRQ calculations take into consideration the combinations of the SS signal uncertainties and possibly all 12 carriers being used for DL transmission.

The 12 carriers being used can happen when the UE makes the measurement in a subframe when a DL PDSCH is scheduled or measurement is in subframe zero and the UE measures in OFDM symbol carrying PBCH i.e. slot 1, symbol 0.

The Min and Max RSRQ values are identified from 6 different RSRQ calculations:

RSRQ Ideal: RSRQ calculated in ideal conditions as given above

RSRQ Min: RSRQ calculation applying –ve signal uncertainty to all configured cells and noise source

RSRQ Max: RSRQ calculation applying +ve signal uncertainty to all configured cells and noise source

RSRQ Max Worst Case: RSRQ calculation applying +ve signal uncertainty for measured cell and –ve signal uncertainty to all remaining configured cells and noise source. This shall be the Max RSRQ possible

RSRQ Max And 12 Carriers: RSRQ calculation applying +ve signal uncertainty to all configured cells and noise source and cell interference considered over all 12 carriers

RSRQ Min Worst Case And 12 Carriers: RSRQ calculation applying -ve signal uncertainty for measured cell and +ve signal uncertainty to all others; and cell interference considered over all 12 carriers. This shall be the Min RSRQ possible

Applying UE measurement accuracy 36.133[37], Table 9.1.6.2-1, +/-4dB normal conditions and side conditions of RSRQ when RSRP Ês/Iot ≥ -6 dB & RSRP ≥ -124 dBm the final boundary value for RSRQ is

Min RSRQ With UE Meas Acc := Min RSRQ -4 dB

Max RSRQ With UE Meas Acc := Max RSRQ + 4 dB

For conditions to fulfil desired cell selection or reselection, the respective conditions shall be satisfied for both the boundary values Min RSRQ RSRQ With UE Measurement Accuracy and Max RSRQ With UE Measurement Accuracy.

As the Boundary conditions also consider the worst scenario of all 12 carriers being transmitted, the requirement for OCNG is removed. There is no need to restrict measurement bandwidth and will be applicable for both DCI formats.

7.23 Test method for eICIC

When periodic CQI feedback is requested due to TTCN configuration, the SS reports the periodic CQI to the TTCN. SS does not react on periodic CQI received and still allocates grants as configured from TTCN.

In the selected ABS no DL/UL user data (SRB/DRB) is scheduled, nor paging is transmitted; this is controlled by TTCN.

7.24 Carriage Aggregation Signalling Sequences

7.24.1 Initial configuration of Pcell

Cell is configured as a normal cell by using function f_EUTRA_CellConfig_Def. The missing CA default parameters (e.g. UL power control Common) are configured by using additional ASP call(s).

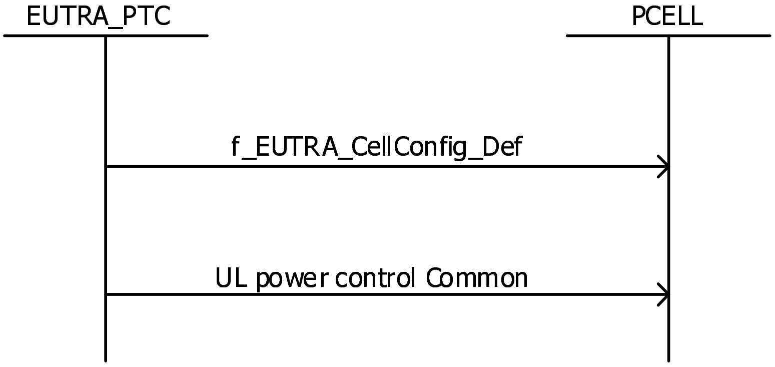
EUTRA_PTC
PCELL
f_EUTRA_CellConfig_Def
UL power control Common

Figure 7.24.1-1: CA sequence of an initial cell configuration for a cell to be used as Pcell

7.24.2 Initial configuration of SCell

Cell is configured as a normal cell except for SRB/DRB configuration by function f_EUTRA_SS_ConfigureActiveCell.

SRB0 not yet configured in step 1 is then configured.

The missing CA default parameters (e.g. UL power control (Common + Dedicated), PUSCH config Dedicated, SRS UL Dedicated) are configured by using additional ASP call(s).

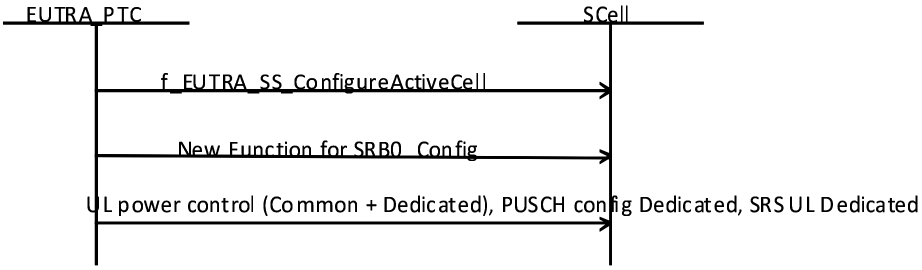
EUTRA_PTC
SCell
f_EUTRA_SS_ConfigureActiveCell
New Function for SRB0 Config
UL power control (Common + Dedicated), PUSCH config Dedicated, SRS UL Dedicated

Figure 7.24.2-1: CA sequence of an initial cell configuration for a cell to be used as Scell

7.24.3 Scell Addition and/or release

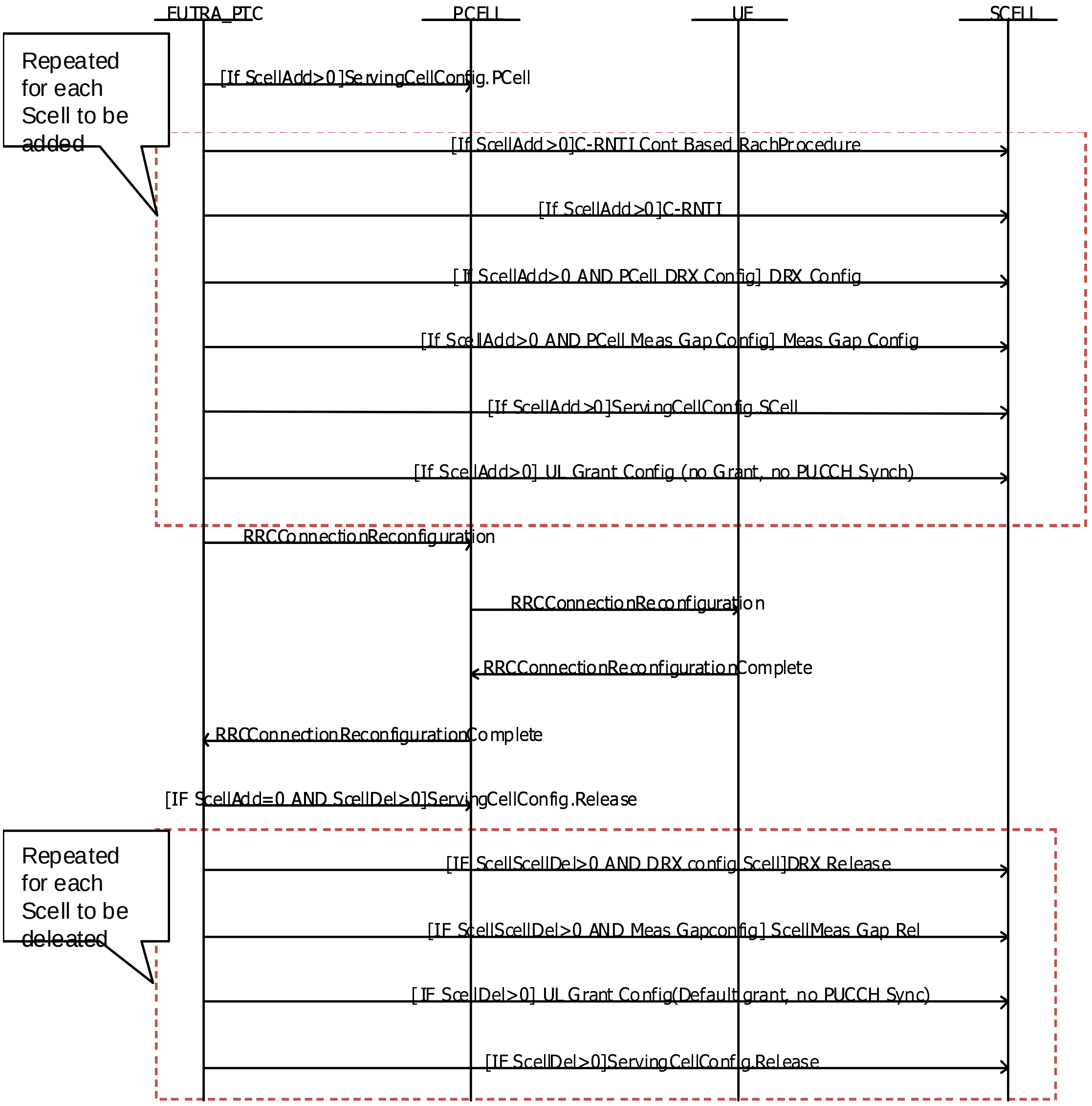
EUTRA_PTC
PCELL
UE
SCELL
Repeated for each Scell to be added
[If ScellAdd>0]ServingCellConfig.PCell
[If ScellAdd>0]C-RNTI Cont Based RachProcedure
[If ScellAdd>0]C-RNTI
[If ScellAdd>0 AND PCell DRX Config] DRX Config
[If ScellAdd>0 AND PCell Meas Gap Config] Meas Gap Config
[If ScellAdd>0]ServingCellConfig.SCell
[If ScellAdd>0] UL Grant Config (no Grant, no PUCCH Synch)
RRCConnectionReconfiguration
RRCConnectionReconfiguration
RRCConnectionReconfigurationComplete
RRCConnectionReconfigurationComplete
[IF ScellAdd=0 AND ScellDel>0]ServingCellConfig.Release
Repeated for each Scell to be deleated
[IF ScellScellDel>0 AND DRX config Scell]DRX Release
[IF ScellScellDel>0 AND Meas Gapconfig] ScellMeas Gap Rel
[IF ScellDel>0] UL Grant Config(Default grant, no PUCCH Sync)
[IF ScellDel>0]ServingCellConfig.Release

Figure 7.24.3-1: CA sequence of Scell Addition and/or release

7.25 Test method for MBMS

7.25.1 Schedule transmission of MCCH messages

The rules for the transmission of MCCH messages are specified in TS 36.331 [19], clause 5.8.1.2. The ASPs SYSTEM_CTRL_REQ and SYSTEM_CTRL_CNF are used as interface to SS; the following rules apply:

The complete MCCH information is provided to SS by using a single ASP. The MCCH carries the *MBSFNAreaConfiguration* and may also carry the *MBMSCountingRequest* message.

The scheduling information sent to SS is the same as the scheduling information sent to the UE.

The MCCH information is sent to SS using the asn.1 types, SS shall encode in unaligned PER and add the necessary padding bits as specified in TS 36.331 [19], clause 9.1.1.1.

Segmentation occurs when the MCCH message size is larger than the TBS of the MCH. SS starts scheduling all MCCH information blocks from the same SFN.

NOTE: With the default values NPRB=NRBDL=25 for 5 MHz and default signalling Imcs =2; then Itbs=2 and the TB size will be 1096 bits, hence segmentation may never happen.

7.25.2 MCCH change notification

A change notification is used to indicate the modification of MCCH information. The notification is transmitted on PDCCH, it includes the notification indicator provided in the ASP and is transmitted using the M-RNTI (defined in 3GPP TS 36.321 [16] Table 7.1-1).

The notification messages are sent during one modification period before transmitting the modified MCCH information. The SFN for the start of modification period is calculated by TTCN. The modified MCCH information and the calculated SFN are provided in the ASP SYSTEM_CTRL_REQ. The notification messages are sent on SFN/subframes calculated by TTCN according to 36.331 [19] clause 6.3.7.

7.25.3 MTCH data scheduling

The SS is configured with configuration parameters for CSA, PMCH, MRBs, MSI and scheduling information for MTCH data transmission.

The TTCN shall ensure that:

- For each configured MCH, the routing & timing information of the scheduled MRB data is consistent with the configured MSI.
- The size of all MRB data scheduled in the same subframe shall fit within the resource allocation of that subframe.

The SS shall ensure that:

- In subframes belonging to the CSA and for which no MCCH/MTCH/MSI data is scheduled by the TTCN, no MCH data shall be sent in MBMS subframes not used as per MSI.

If an MTCH packet is scheduled from TTCN in a subframe in which MCCH will be automatically transmitted by SS and/or MSI is configured and needs to be included, the MTCH packet and MCCH data along with possible MSI are included in one MAC PDU and *signallingMCS* is used.

When data is sent on MTCH the SS shall set the MSI in the MAC header according to TS 36.321 [16] clause 6.1.3.7. The periodicity of the MSI is defined by the MCH scheduling period i.e. the MSI is not necessarily included in the subframe where the RLC SDU is transmitted.

8 External Function Definitions

The following external functions are required to be implemented by the SS.

TTCN-3 External Function		
Name	**fx_KeyDerivationFunction**	
Description	Hashing function for Hashing algorithms as defined in TS 33.401 [24] SHA-256 encoding algorithm is used as KEY Description Function	
Parameters	KDF	KDF_HMAC_SHA_256 (no other KDF defined yet)
	Key	256 bit key
	String	string being constructed acc. to TS 33.401 [24], annex A
Return Value	256 bit derived key	

TTCN-3 External Function		
Name	**fx_NasIntegrityAlgorithm**	
Description	Apply integrity protection algorithm on a given octetstring	
Parameters	NAS PDU	octetstring according to TS 24.301 [21], clause 4.4.3.3 this shall include octet 6 to n of the security protected NAS message, i.e. the sequence number IE and the NAS message IE
	Integrity Algorithm	3 bits as defined in TS 24.301 [21], clause 9.9.3.23
	KNAS$_{int}$	Integrity key
	NAS COUNT	as documented in TS 24.301
	BEARER Id	fix value ('00000'B) acc. TS 33.401 [24], clause 8.1
	Direction	UL: 0 DL: 1 (acc. to TS 33.401 [24], clause B.1)
Return Value	Message Authentication Code (4 octets)	

TTCN-3 External Function		
Name	**fx_NasCiphering**	
Description	Apply ciphering on a given octetstring	
Parameters	NAS PDU	octetstring
	Ciphering Algorithm	3 bits as defined in TS 24.301 [21], clause 9.9.3.23
	KNAS$_{enc}$	Ciphering Key
	NAS COUNT	as documented in TS 24.301
	BEARER Id	fixed value ('00000'B) acc. TS 33.401 [24], clause 8.1
Return Value	ciphered octet string	

TTCN-3 External Function		
Name	**fx_NasDeciphering**	
Description	Apply deciphering on a given octetstring	
Parameters	ciphered NAS PDU	octetstring
	Ciphering Algorithm	3 bits as defined in TS 24.301 [21], clause 9.9.3.23
	KNAS$_{enc}$	Ciphering Key
	NAS COUNT	as documented in TS 24.301 [21]
	BEARER Id	fixed value ('00000'B) acc. TS 33.401 [24], clause 8.1
Return Value	deciphered octet string	

TTCN-3 External Function		
Name	**fx_GetCurrentTestcaseName**	
Description	external function giving back the name of the test case currently running	
Parameters	None	
Return Value	char string	

TTCN-3 External Function		
Name	**fx_AsIntegrityAlgorithm**	
Description	Apply integrity protection algorithm on a given octetstring	
Parameters	PDCP PDU	octetstring
	Integrity Algorithm	3 bits as defined in TS 33.401 [24]
	KRRC$_{int}$	Integrity key
	PDCP COUNT	octetstring, length 4
	BEARER Id	the value of the DRB identity minus one
	Direction	UL: 0 DL: 1 (acc. to TS 33.401 [24], clause B.2)
Return Value	Message Authentication Code (4 octets)	

TTCN-3 External Function		
Name	**fx_AsCiphering**	
Description	Apply ciphering on a given octetstring	
Parameters	SDU	octetstring
	Ciphering Algorithm	3 bits as defined in TS 33.401 [24]
	$KRRC_{enc}$	Ciphering Key
	PDCP COUNT	octetstring, length 4
	BEARER Id	the value of the DRB identity minus one
Return Value	ciphered octet string	

TTCN-3 External Function		
Name	**fx_AsDeciphering**	
Description	Apply deciphering on a given octetstring	
Parameters	ciphered SDU	octetstring
	Ciphering Algorithm	3 bits as defined in TS 33.401 [24]
	$KRRC_{enc}$	Ciphering Key
	PDCP COUNT	octetstring, length 4
	BEARER Id	the value of the DRB identity minus one
Return Value	deciphered octet string	

TTCN-3 External Function		
Name	**fx_GetSystemTime**	
Description	Function to get the system time: Implementation is based on C standard library (time.h)	
Parameters	p_Struct_tm (out)	p_Struct_tm returns local system time equivalent to "struct tm" as defined for C standard library (time.h or ctime): NOTE: tm_sec is generally 0-59. Extra range to accommodate for leap seconds in certain systems C implementation:
	p_TimezoneInfo (out)	p_TimezoneInfo returns the difference (in seconds) between the UTC time (GMT) and the local time (integer value); C implementation: NOTE: p_TimezoneInfo does not consider daylight saving e.g. it is always 3600 for CET independent of summer/winter
Return Value	None	

p_Struct_tm (out)

```
type record Struct_tm_Type {
  integer tm_sec,  // seconds after the minute
                   // (0..61; see NOTE)
  integer tm_min,  // minutes after the hour (0..59)
  integer tm_hour, // hours since midnight (0..23)
  integer tm_mday, // day of the month (1..31)
  integer tm_mon,  // months since January (0..11)
  integer tm_year, // years since 1900
  integer tm_wday, // days since Sunday (0..6)
  integer tm_yday, // days since January 1 (0..365)
  integer tm_isdst // Daylight Saving Time flag
};
```

C implementation:

```
    time_t v_Now = time(NULL);
    struct tm *v_Tm = localtime(&v_Now);
```

p_TimezoneInfo (out)

C implementation:

```
    int timezone =
      (int)difftime(mktime(gmtime(&v_Now)), v_Now);
```

9 IXIT Proforma

This partial IXIT proforma contained in the present document is provided for completion, when the related Abstract Test Suite is to be used against the Implementation Under Test (IUT).

Text in *italics* is a comment for guidance for the production of an IXIT, and is not to be included in the actual IXIT.

The completed partial IXIT will normally be used in conjunction with the completed ICS, as it adds precision to the information provided by the ICS.

9.1 E-UTRAN PIXIT

Table 9.1-1: CommonPIXIT

Parameter Name	Parameter Type	Default Value	Supported Values	Description
px_AccessPointName	octetstring			Access Point Name, as defined in TS 23.003 [48] and used in TS 24.008 [20], clause 10.5.6.1
px_AttachTypeTested	EUTRA_ATTACH_TESTED_Type	EPS_ATTACH_ONLY	EPS_ATTACH_ONLY, COMBINED_ATTACH	Attach Type to be tested, if UE supports both pc_Attach and pc_Combined_Attach
px_eAuthRAND	B128_Type	oct2bit('A3DE0C6D363E30C364A4078F1BF8D577'O)		Random Challenge
px_EllipsoidPointWithAltitude	O8_Type			Ellipsoid Point With Altitude value to be provided in Update UE location information (see 36.509 cl. 6.12)
px_HorizontalVelocity	O3_Type			Horizontal Velocity value to be provided in Update UE location information (see 36.509 cl. 6.12)
px_eJapanMCC_Band6	NAS_Mcc	'442'H		Japan MCC code to be used for Band 6. The same value will be used for E-UTRA and Inter-RAT cells. Type is different to that defined in TS 34.123-3 [7]
px_PWS_CB_DataPage1	charstring			ETWS or CMAS Page 1 warning data message
px_PWS_CB_DataPage2	charstring			ETWS or CMAS Page 2 warning data message
px_PWS_CB_DataPage3	charstring			ETWS or CMAS Page 3 warning data message
px_PWS_CB_DataPage4	charstring			ETWS or CMAS Page 4 warning data message
px_ETWS_DigitalSignature	O43_Type			ETWS Digital Signature
px_IPv4_Address1_UE	charstring			IPv4 Address connected to PDN1
px_IPv4_Address2_UE	charstring			IPv4 Address connected to PDN2
px_IPv4_Address1_NW	charstring			IPv4 Gateway Address in PDN1
px_Ipv4_Address2_NW	charstring			Ipv4 Gateway Address in PDN2
px_IPv4_Address1_RemoteUE	charstring			IPv4 Address of remote UE connected to PDN1
px_IPv4_Address2_RemoteUE	charstring			IPv4 Address of remote UE connected to PDN2
px_Ipv4_Address_HomeAgent	charstring			Ipv4 Home Agent Address
px_IPv6_Address1_UE	charstring			IPv6 Address connected to PDN1
px_IPv6_Address2_UE	charstring			IPv6 Address connected to PDN2
px_IPv6_Address1_NW	charstring			IPv6 Gateway Address in PDN1
px_Ipv6_Address2_NW	charstring			Ipv6 Gateway Address in PDN2
px_IPv6_Address1_RemoteUE	charstring			IPv6 Address of remote UE connected to PDN1
px_IPv6_Address2_RemoteUE	charstring			IPv6 Address of remote UE connected to PDN2

Parameter Name	Parameter Type	Default Value	Supported Values	Description
px_Ipv6_Address_HomeAgent	charstring			Ipv6 Home Agent Address
px_SMS_ChkMsgReceived	boolean	true		Whether the operator can check an MT Short Message received
px_SMS_MsgFrmt	charstring	"1"		UE which only supports PDU mode will be configured for text mode
px_RATComb_Tested	RATComb_Tested_Type	EUTRA_UTRA	EUTRA_UTRA, EUTRA_GERAN, EUTRA_Only	This parameter represents the network RAT capability / preference and indicates which, if any is supported, RAT combination is to be tested.
px_SinglePLMN_Tested	SinglePLMN_Tested_Type	MultiPLMN	SinglePLMN, MultiPLMN	This parameter represents the network capability/preference to support multi PLMNs on the same test Band and indicates the preference of multi PLMNs or single PLMN test environment.
px_UE_ CS_PS_UsageSetting_Tested	CS_PS_MODE	VOICE_CENTRIC	VOICE_CENTRIC, DATA_CENTRIC	Specifies which CS/PS mode is under test
px_UE_PS_UsageSetting_Tested	PS_MODE	VOICE_CENTRIC	VOICE_CENTRIC, DATA_CENTRIC	Specifies which PS mode is under test
px_UTRAN_ModeUnderTest	UTRAN_FDD_TDD	UTRAN_FDD	UTRAN_FDD, UTRAN_TDD	Specifies which radio access technology is being tested in UTRAN
px_TestLoopModeB_Delay	O1_Type	‘5A’		This parameter represents the IP_PDU_delay to be used for UE test loop mode B in test cases, where long delay may be needed e.g. because of user interaction.
px_IP_MTU_Size	integer	65535		MTU Size

Table 9.1-2: E-UTRAN PIXIT

Parameter Name	Parameter Type	Default Value	Supported Values	Description
px_eTDDsubframeConfig	TDD_SubframeAssignment_Type	1		TDD uplink-downlink subframe configuration
px_ePrimaryBandChannelBandwidth	Dl_Bandwidth_Type	n25		E-UTRA primary band channel bandwidth
px_ePrimaryFrequencyBand	FrequencyBand_Type	1		E-UTRA primary frequency band
px_eSecondaryFrequencyBand	FrequencyBand_Type	2		E-UTRA secondary frequency band
px_eSecondaryBandChannelBandwidth	Dl_Bandwidth_Type	n25		E-UTRA secondary band channel bandwidth
px_NAS_CipheringAlgorithm	B3_Type	001’B		NAS Ciphering Algorithm (eea1)
px_NAS_IntegrityProtAlgorithm	B3_Type	001’B		NAS Integrity Algorithm (eia1)
px_RRC_CipheringAlgorithm	CipheringAlgorithm	eea1		Ciphering Algorithm
px_RRC_IntegrityProtAlgorithm	IntegrityProtAlgorithm	eia1		Integrity Algorithm
px_eMaxNumberROHC_ContextSessions	MaxNumberROHC_ContextSessions_Type	Cs16		Maximum number of ROHC context sessions

9.2 MultiRAT PIXIT

Table 9.2-1: GERAN PIXIT

Parameter Name	Parameter Type	Default Value	Supported Values	Description
px_GERAN_BandUnderTest	GERAN_BandUnderTestType	GSM_P900		Indicates which band is under test

Table 9.2-2: UTRAN PIXIT

Parameter Name	Parameter Type	Default Value	Supported Values	Description
px_UTRAN_CipheringAlgorithm	CipheringAlgorithm_r7	uea2	uea0, uea1, uea2	UTRAN Ciphering algorithm
px_UARFCN_TDD_D_Low	integer			Low Range downlink UARFCN value for LCR TDD
px_UARFCN_TDD_D_Mid	integer			Mid Range downlink UARFCN value for LCR TDD
px_UARFCN_TDD_D_High	integer			High Range downlink UARFCN value for LCR TDD
px_TDD_OperationBand	charstring			LCR TDD Operation Band

Table 9.2-3: CDMA2000 HRPD PIXIT

Parameter Name	Parameter Type	Default Value	Supported Values	Description
px_HRPD_BandClass	BandclassCDMA2000_Type	1		Band Class; Table 1.5-1 of C.S0057-E v1.0 Default value corresponds to 1.8 to 2.0 GHz PCS band
px_HRPD_SectorID_Cell15	SectorID_HRPD_Type	oct2bit('FEA00000000000000000000000000001'O)		Sector ID of Cell 15; Clause 13.9 of C.S0024-C v2.0
px_HRPD_SectorID_Cell16	SectorID_HRPD_Type	oct2bit('FEA00000000000000000000000000002'O)		Sector ID of Cell 16; Clause 13.9 of C.S0024-C v2.0
px_HRPD_SectorID_Cell17	SectorID_HRPD_Type	oct2bit('FEA00000000000000000000000000003'O)		Sector ID of Cell 17; Clause 13.9 of C.S0024-C v2.0
px_HRPD_SectorID_Cell18	SectorID_HRPD_Type	oct2bit('FEA00000000000000000000000000004'O)		Sector ID of Cell 18; Clause 13.9 of C.S0024-C v2.0
px_ColorCode	ColorCode_Type	64		Colour code of the subnet to which the sectors belong; Same for all HRPD cells
px_ColorCodeDiff	B32_Type	128		Colour code of the subnet to which the sectors belong; Adifferent colour code than default
px_OpenLoopAdjust	OpenLoopAdjust_Type	10		The value of open loop adjust to be used by access terminals in the open loop power estimate, expressed as an unsigned value in units of 1 dB. The value used by the access terminal is -1 times the value of this field
px_UATI24	O3_Type	'123456'O		UATI to be allocated to the UE, clause 6.3.7.2.2 of C.S0024-C v2.0
px_MACIndex	integer	15		ReverseLinkMACIndex to be used. Allowed values 0...383 C.S0024-C v2.0 clause 12.4.1.3.2.2

Table 9.2-4: CDMA2000 1xRTT PIXIT

Parameter Name	Parameter Type	Default Value	Supported Values	Description
px_1XRTT_BaseId_Cell19	B16_Type	int2bit (39,16)		Base ID of Cell 19
px_1XRTT_BaseId_Cell20	B16_Type	int2bit (40,16)		Base ID of Cell 20
px_1XRTT_BaseId_Cell21	B16_Type	int2bit (41,16)		Base ID of Cell 21
px_1XRTT_BaseId_Cell22	B16_Type	int2bit (42,16)		Base ID of Cell 22
px_1XRTT_NID	B16_Type	int2bit (100,16)		default Network ID of 1xRTT Cells
px_1XRTT_SID	B15_Type	int2bit (200,15)		default SystemID of 1xRTT Cells
px_1XRTT_TMSI_Def	O4_Type	'1234ABCD'O		TMSI to be used in 1XRTT
px_1XRTT_MinProtRev	ProtRev_Type	0		Minimum Protocol revision supported by Base Station
px_1XRTT_UserInfo_EncMode	EncryptionMode_Type	2		Encryption Mode Rijndael algorithm
px_1XRTT_Sig_EncMode	EncryptionMode_Type	2		Encryption Mode Rijndael algorithm
px_1XRTT_BandClass	BandclassCDMA2000_Type	1		Band Class; Table 1.5-1 of C.S0057 E v1.0. Default value corresponds to 1.8 GHz to 2.0 GHz PCS band
px_PowerDownRegEnabled	boolean	true		Parameter for power down reg in 1xRTT
px_1XRTT_Zone_Timer	B3_Type	‘000’B		Zone timer sent in ‘System Parameters Message’ overhead message
px_RAND	B32_Type	'00001111000011110000111100001111'B		Random Challenge Data to be included along with mobility parameters in CSFBParametersResponseCDMA2000 or HandoverFromEUTRAPreparationRequest
px_RAND2	B32_Type	'00001111000011110000111100001111'B		Random Challenge Data to be included along with mobility parameters in CSFBParametersResponseCDMA2000 or HandoverFromEUTRAPreparationRequest

10 Postambles

The purpose of this clause is to specify postambles to bring the UE to a well defined state regardless of the UE state at the termination of main test body or of the SS conditions and values of the system information inherited from the test.

10.1 Postambles for E-UTRA to UTRA tests

This clause describes UE postamble procedures which are used at the end of inter-RAT test cases specified in TS 36.508 [3] so as to switch off the UE.

UE LTE and UTRAN postamble conditions are specified in table 10.1-1.

Table 10.1-1: UE postamble conditions

LTE UE attach type	UE UTRA CS/PS domain	Postamble condition
attach	pc_CS AND pc_PS	C1
	pc_PS AND NOT (pc_CS)	C2
combined_attach	pc_CS AND pc_PS	C3
	pc_CS AND NOT (pc_PS)	C4

10.1.1 UE postamble states and procedures for E-UTRA to UTRA

In order to bring the UE to the switched/powered off state, a number of procedures need to be executed in a hierarchical sequence, according to the reference end state specified in each test procedure sequence. The sequences and the identified procedures are shown in figure 10.1.1-1.

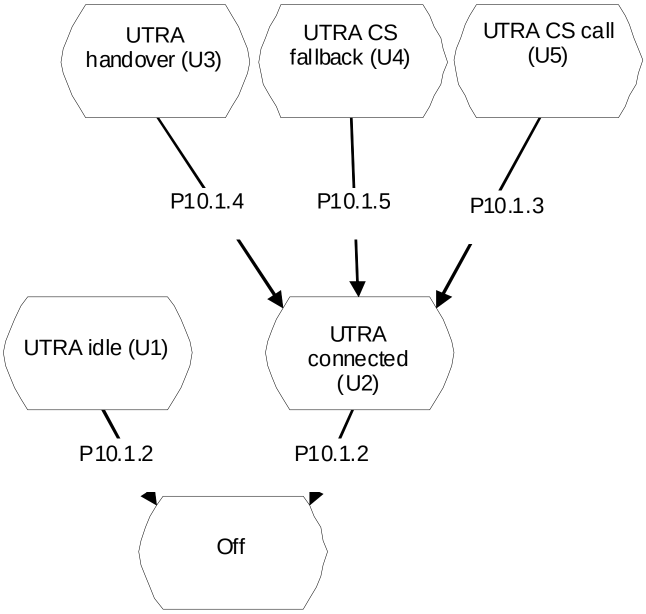
UTRA handover (U3)
UTRA CS fallback (U4)
UTRA CS call (U5)
P10.1.4
P10.1.5
P10.1.3
UTRA idle (U1)
UTRA connected (U2)
P10.1.2
P10.1.2
Off

Figure 10.1.1-1: UE postamble procedures for E-UTRA / UTRA test cases

NOTE 1: Depending on the test case specifications the termination of a test case can be in any state of figure 10.1.1-1.

UE in UTRA state U2, U3, U4 and U5 may send data on the established radio bearer and shall be accepted and handled.

NOTE 2: NAS and AS security procedures during routing area update and handover are performed according to TS 33.401 [24], clauses 9.1.1 and 9.2.1 and TS 25.331 [36], clause 8.3.6.3.

10.1.2 Switch/Power off procedure

10.1.2.1 Procedure

Table 10.1.2.1-1: Switch/Power off procedure

Step	Procedure	Message Sequence	
		U - S	Message
1	The UE is powered off or switched off, (see ICS)	-	-
-	EXCEPTION: Steps 2 to 7 specify the behaviour if UE supports pc_SwitchOnOff.	-	-
-	EXCEPTION: Steps 2 to 4 are used only when the UE is in UTRA idle end state (U1).		
2	The UE transmits RRC CONNECTION REQUEST	-->	RRC CONNECTION REQUEST
3	The SS transmit a RRC CONNECTION SETUP	<--	RRC CONNECTION SETUP
4	The UE transmits an RRC CONNECTION SETUP COMPLETE message	-->	RRC CONNECTION SETUP COMPLETE
-	EXCEPTION: Step 5a1 specifies behaviour when the current UTRA cell is in NMO I and the UE is in condition: - C1 or - C3	-	-
5a1	The UE transmits an UPLINK DIRECT TRANSFER message or INITIAL DIRECT TRANSFER message when the UE is in UTRA idle end state (U1). This message includes a DETACH REQUEST message with the detach type='power switched off, GPRS/IMSI combined detach'	-->	DETACH REQUEST
-	EXCEPTION: Step 5b1 specifies behaviour when the current UTRA cell is in (NMO I or NMO II) and the UE is in condition C4	-	-
5b1	The UE transmits an UPLINK DIRECT TRANSFER message or INITIAL DIRECT TRANSFER message when the UE is in UTRA idle end state (U1). This message includes an IMSI DETACH INDICATION message	-->	IMSI DETACH INDICATION
-	EXCEPTION: Step 5c1 specifies behaviour when the current UTRA cell is in (NMO I or NMO II) and the UE is in condition C2	-	-
5c1	The UE transmits an UPLINK DIRECT TRANSFER message or INITIAL DIRECT TRANSFER message when the UE is in UTRA idle end state (U1). This message includes a DETACH REQUEST message with detach type='power switched off, PS detach"	-->	DETACH REQUEST
-	EXCEPTION: Steps 5d1 and 5d2 specify behaviour when the current UTRA cell is in NMO II and the UE is in condition: - C1 or - C3. Both detach messages (in steps 5d1 and 5d2) can be sent by UE in any order.	-	-

Step	Procedure	Message Sequence	
		U - S	Message
5d1	The UE transmits an UPLINK DIRECT TRANSFER message or INITIAL DIRECT TRANSFER message when the UE is in UTRA idle end state (U1) and this is the first message received. This message includes a DETACH REQUEST message with the detach type=‘power switched off, PS detach"	-->	DETACH REQUEST
5d2	The UE transmits an UPLINK DIRECT TRANSFER message or INITIAL DIRECT TRANSFER message when the UE is in UTRA idle end state (U1) and this is the first message received. This message includes an IMSI DETACH INDICATION message	-->	IMSI DETACH INDICATION
6	The SS transmits an RRC CONNECTION RELEASE message	<--	RRC CONNECTION RELEASE
7	The UE transmits a RRC CONNECTION RELEASE COMPLETE message	-->	RRC CONNECTION RELEASE COMPLETE

10.1.3 CC disconnect procedure

10.1.3.1 Procedure

Table 10.1.3.1-1: CC disconnect procedure

Step	Procedure	Message Sequence	
		U - S	Message
1	The SS transmits a DOWNLINK DIRECT TRANSFER message. This message includes a DISCONNECT message.	<--	DISCONNECT
2	The UE transmits an UPLINK DIRECT TRANSFER message. This message includes a RELEASE message.	-->	RELEASE
3	The SS transmits a DOWNLINK DIRECT TRANSFER message. This message includes a RELEASE COMPLETE message.	<--	RELEASE COMPLETE
-	EXCEPTION: Step 6 may happen in parallel to Step 4. Steps 5a to 5e are only performed if Step 6 has not already occured		
4	Wait for 5 seconds in case the UE sends the RAU on the same connection		
5a	The SS transmits an RRC CONNECTION RELEASE message	<--	RRC CONNECTION RELEASE
5b	The UE transmits a RRC CONNECTION RELEASE COMPLETE message	-->	RRC CONNECTION RELEASE COMPLETE
5c	The UE transmits RRC CONNECTION REQUEST	-->	RRC CONNECTION REQUEST
5d	The SS transmit a RRC CONNECTION SETUP	<--	RRC CONNECTION SETUP
5e	The UE transmits an RRC CONNECTION SETUP COMPLETE message	-->	RRC CONNECTION SETUP COMPLETE
6	The UE transmits an UPLINK DIRECT TRANSFER message. This message includes a ROUTING AREA UPDATE REQUEST message with Update type ='Combined RA/LA Updated'	-->	ROUTING AREA UPDATE REQUEST
7	The SS transmits a DOWNLINK DIRECT TRANSFER message. This message includes a ROUTING AREA UPDATE ACCEPT message.	<--	ROUTING AREA UPDATE ACCEPT
8	The UE transmits an UPLINK DIRECT TRANSFER message. This message includes a ROUTING AREA UPDATE COMPLETE message.	-->	ROUTING AREA UPDATE COMPLETE

10.1.4 PS Routing Area Update procedure

10.1.4.1 Procedure

Table 10.1.4.1-1: PS Routing Area Update procedure

Step	Procedure	Message Sequence	
		U - S	Message
-	EXCEPTION: steps 1a1 to 1a5 specify the UE behaviour when the current UTRA cell is in NMO I and the UE is in condition: - C1 or - C3 and the UE is not registered to the LAC of the current UTRA cell	-	-
1a1	The UE transmits an UPLINK DIRECT TRANSFER message. This message includes a ROUTING AREA UPDATE REQUEST message with Update type ='Combined RA/LA Updated'	-->	ROUTING AREA UPDATE REQUEST
1a2	Void	-	-
1a3	Void	-	-
1a4	The SS transmits a DOWNLINK DIRECT TRANSFER message. This message includes a ROUTING AREA UPDATE ACCEPT message.	<--	ROUTING AREA UPDATE ACCEPT
1a5	The UE transmits an UPLINK DIRECT TRANSFER message. This message includes a ROUTING AREA UPDATE COMPLETE message.	-->	ROUTING AREA UPDATE COMPLETE
-	EXCEPTION: steps 1b1 to 1b5 specify the UE behaviour when the current UTRA cell is in (NMO I or NMO II) and the UE is in condition: - C2 or - C3 and the UE is registered to the LAC of the current UTRA cell	-	-
1b1	The UE transmits an UPLINK DIRECT TRANSFER message. This message includes a ROUTING AREA UPDATE REQUEST message with Update type ='RA Update'	-->	ROUTING AREA UPDATE REQUEST
1b2	Void	-	-
1b3	Void	-	-
1b4	The SS transmits a DOWNLINK DIRECT TRANSFER message. This message includes a ROUTING AREA UPDATE ACCEPT message.	<--	ROUTING AREA UPDATE ACCEPT
1b5	The UE transmits an UPLINK DIRECT TRANSFER message. This message includes a ROUTING AREA UPDATE COMPLETE message.	-->	ROUTING AREA UPDATE COMPLETE
-	EXCEPTION: steps 1c1 to 1c9 specify the UE behaviour when the current UTRA cell is in NMO II and the UE is in condition: - C1 or - C3 and the UE is not registered to the LAC of the current UTRA cell. The LOCATION UPDATE REQUEST message (step 1c6) can be received during the routing area updating procedure (steps 1c1 to 1c4).	-	-
1c1	The UE transmits an UPLINK DIRECT TRANSFER message. This message includes a ROUTING AREA UPDATE REQUEST message with Update type ='RA Update'.	-->	ROUTING AREA UPDATE REQUEST

Step	Procedure	Message Sequence	
		U - S	Message
1c2	Void	-	-
1c3	Void	-	-
1c4	The SS transmits a DOWNLINK DIRECT TRANSFER message. This message includes a ROUTING AREA UPDATE ACCEPT message.	<--	ROUTING AREA UPDATE ACCEPT
1c5	The UE transmits an UPLINK DIRECT TRANSFER message. This message includes a ROUTING AREA UPDATE COMPLETE message.	-->	ROUTING AREA UPDATE COMPLETE
1c6	The UE transmits an UPLINK DIRECT TRANSFER message. This message includes a LOCATION UPDATING REQUEST message.	-->	LOCATION UPDATING REQUEST
1c7	The SS transmits a SECURITY MODE COMMAND message.	<--	SECURITY MODE COMMAND
1c8	The UE transmits a SECURITY MODE COMPLETE message.	-->	SECURITY MODE COMPLETE
1c9	The SS transmits a DOWNLINK DIRECT TRANSFER message. This message includes a LOCATION UPDATING ACCEPT	<--	LOCATION UPDATING ACCEPT
1c10	The EU transmits a UPLINK DIRECT TRANSFER message. This message includes a TMSI REALLOCATION COMPLETE	-->	TMSI REALLOCATION COMPLETE

10.1.5 CS fallback procedure

10.1.5.1 Procedure

Table 10.1.5.1-1: CS fallback procedure

Step	Procedure	Message Sequence	
		U - S	Message
-	EXCEPTION: In parallel to the events described in step 1a1 to 2a5 the steps specified in table 10.1.5.1-2 takes place.	-	-
-	EXCEPTION: Steps 1a1 and 1a2 specify the MO call procedure and step 1b1 specifies the MT call procedure.	-	-
1a1	The UE transmits an INITIAL DIRECT TRANSFER message including a CM SERVICE REQUEST message.	-->	CM SERVICE REQUEST
1a2	The SS transmits an UPLINK DIRECT TRNASFER message including a CM SERVICE REJECT with the reject cause #32 (Service option not supported)	<--	CM SERVICE REJECT
-	EXCEPTION: Step 1b1 specifies the MT call procedure.	-	-
1b1	The UE transmits an INITIAL DIRECT TRANSFER message including a PAGING RESPONSE message.	-->	PAGING RESPONSE
-	EXCEPTION: Steps 2a1 and 2a5 specify the location area update procedure when the current UTRA cell is in NMO II and the UE is in condition C3 and the UE is not registered to the LAC of the current UTRA cell.	-	-
2a1	The UE transmits an UPLINK DIRECT TRANSFER message. This message includes a LOCATION UPDATING REQUEST message.	-->	LOCATION UPDATING REQUEST

Step	Procedure	Message Sequence	
		U - S	Message
2a2	The SS transmits a SECURITY MODE COMMAND message.	<--	SECURITY MODE COMMAND
2a3	The UE transmits a SECURITY MODE COMPLETE message.	-->	SECURITY MODE COMPLETE
2a4	The SS transmits a DOWNLINK DIRECT TRANSFER message. This message includes a LOCATION UPDATING ACCEPT	<--	LOCATION UPDATING ACCEPT
2a5	The EU transmits a UPLINK DIRECT TRANSFER message. This message includes a TMSI REALLOCATION COMPLETE	-->	TMSI REALLOCATION COMPLETE
3	The SS transmits a SECURITY MODE COMMAND message.	<--	SECURITY MODE COMMAND
4	The UE transmits a SECURITY MODE COMPLETE message.	-->	SECURITY MODE COMPLETE
5	The SS transmits a DOWNLINK DIRECT TRANSFER message. This message includes a ROUTING AREA UPDATE ACCEPT message.	<--	ROUTING AREA UPDATE ACCEPT
6	The UE transmits an UPLINK DIRECT TRANSFER message. This message includes a ROUTING AREA UPDATE COMPLETE message.	-->	ROUTING AREA UPDATE COMPLETE
-	EXCEPTION: Steps 7a1 and 7a5 specify the combined routing updating procedure when the intial RAU procedure was for RA Only. This may occur either before, or after, steps 8 and 9	-	-
7a1	The UE transmits a ROUTING AREA UPDATE REQUEST message.	-->	ROUTING AREA UPDATE REQUEST
7a2	The SS transmits a SECURITY MODE COMMAND message.	<--	SECURITY MODE COMMAND
7a3	The UE transmits a SECURITY MODE COMPLETE message.	-->	SECURITY MODE COMPLETE
7a4	The SS transmits a DOWNLINK DIRECT TRANSFER message. This message includes a ROUTING AREA UPDATE ACCEPT message.	<--	ROUTING AREA UPDATE ACCEPT
7a5	The UE transmits an UPLINK DIRECT TRANSFER message. This message includes a ROUTING AREA UPDATE COMPLETE message.	-->	ROUTING AREA UPDATE COMPLETE
-	EXCEPTION: Steps 7b1 and 7b4 specify the location updating procedure when the current UTRA cell is in network mode (NMO I or NMO II) and the UE is in condition C4 and the UE is not registered to the LAC of the current UTRA cell.	-	-
7b1	The UE transmits an UPLINK DIRECT TRANSFER message. This message includes a LOCATION UPDATING REQUEST message.	-->	LOCATION UPDATING REQUEST
7b2	The SS transmits a SECURITY MODE COMMAND message.	<--	SECURITY MODE COMMAND
7b3	The UE transmits a SECURITY MODE COMPLETE message.	-->	SECURITY MODE COMPLETE
7b4	The SS transmits a DOWNLINK DIRECT TRANSFER message. This message includes a LOCATION UPDATING ACCEPT	<--	LOCATION UPDATING ACCEPT
7b5	The EU transmits a UPLINK DIRECT TRANSFER message. This message includes a TMSI REALLOCATION COMPLETE	-->	TMSI REALLOCATION COMPLETE

Step	Procedure	Message Sequence	
		U - S	Message
8	The SS transmits an RRC CONNECTION RELEASE message.	<--	RRC CONNECTION RELEASE
9	The UE transmits an RRC CONNECTION RELEASE COMPLETE message.	-->	RRC CONNECTION RELEASE COMPLETE

Table 10.1.5.1-2: Parallel behaviour

St	Procedure	Message Sequence		TP	Verdict
		U - S	Message		
1	The UE transmits a ROUTING AREA UPDATE REQUEST message.	-->	ROUTING AREA UPDATE REQUEST	-	-

10.2 Postambles for E-UTRAN to GERAN tests

This clause describes UE postamble procedures which are used at the end of inter-RAT test cases defined in TS 36.508 [3] so as to switch off the UE. UE LTE and GERAN postamble transitions are specified in table 10.2-1.

Table 10.2-1: UE postamble conditions

LTE UE attach type	UE GERAN CS/PS domain	Postamble condition
attach	pc_GPRS	C1
combined attach	pc_GPRS	C2
	NOT pc_GPRS	C3

10.2.1 UE postamble states and procedures for E-UTRA to GERAN test cases

In order to bring the UE to the switched/powered off state there are a number of procedures that need to be executed in a hierarchical sequence, according to the reference end state specified in each test procedure sequence. The sequences and the identified procedures are shown in figure 10.2.1-1.

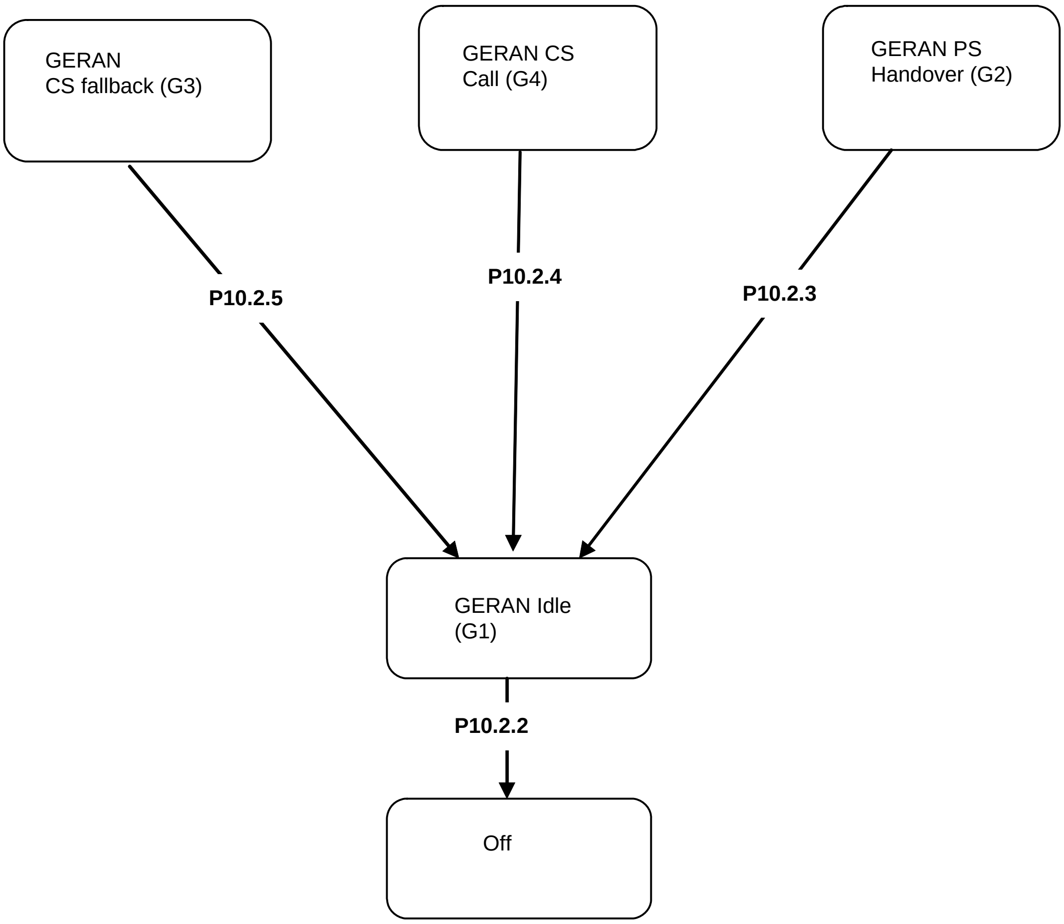
GERAN
CS fallback (G3)
GERAN CS
Call (G4)
GERAN PS
Handover (G2)
P10.2.5
P10.2.4
P10.2.3
GERAN Idle
(G1)
P10.2.2
Off

Figure 10.2.1-1: UE postamble procedures for E-UTRA / GERAN test cases

NOTE 1: Depending on the test case specifications the termination of a test case can be in any state of figure 10.2.1-1.

NOTE 2: The security procedures for interworking to GERAN are according to TS 33.401 [24] clauses 10.2.1 and 10.3.1.

10.2.2 Switch/Power off procedure

10.2.2.1 Procedure

Table 10.2.2.1-1: Switch/Power off procedure

Step	Procedure	Message Sequence	
		U - S	Message
1	The UE is powered off or switched off, (see ICS)	-	-
-	EXCEPTION: Steps 2a1 to 2c2 specify the behaviour if UE supports pc_SwitchOnOff.	-	-
-	EXCEPTION: Step 2a1 specifies behaviour when the GERAN cell is in (NMO I or NMO II) and UE is in condition C1	-	-
2a1	The UE transmits a DETACH REQUEST message	-->	DETACH REQUEST
-	EXCEPTION: Step 2b1 specifies behaviour when the GERAN cell is in (NMO I or NMO II) and UE is in condition C3	-	-
2b1	The UE transmits an IMSI DETACH INDICATION message	-->	IMSI DETACH INDICATION
-	EXCEPTION: Steps 2c1 and 2c2 specify behaviour when the GERAN cell is in NMO II and UE is in condition C2. The messages can be sent in any order	-	-
2c1	The UE transmits an IMSI DETACH INDICATION message	-->	IMSI DETACH INDICATION
2c2	The UE transmits a DETACH REQUEST message	-->	DETACH REQUEST

10.2.3 PS Handover procedure

10.2.3.1 Procedure

Table 10.2.3.1-1: PS handover procedure

Step	Procedure	Message Sequence	
		U - S	Message
-	EXCEPTION: Steps 1a1 and 1a3 specify the UE behaviour when GERAN cell is in NMO I and the UE is in condition C2 and the UE is not registered to the LAC of this cell.	-	-
1a1	The UE transmits a ROUTING AREA UPDATE REQUEST message with update type='Combined RA/LA Update'.	-->	ROUTING AREA UPDATE REQUEST
1a2	The SS transmits a ROUTING AREA UPDATE ACCEPT message.	<--	ROUTING AREA UPDATE ACCEPT
1a3	The UE transmits a ROUTING AREA UPDATE COMPLETE message.	-->	ROUTING AREA UPDATE COMPLETE
-	EXCEPTION: Steps 1b1 and 1b3 specify the location updating procedure when GERAN cell is in (NMO I or NMO II) and the UE is in condition C2 and the UE is registered to the LAC of this cell.	-	-
1b1	The UE transmits a ROUTING AREA UPDATE REQUEST message with update type='RA Update'.	-->	ROUTING AREA UPDATE REQUEST
1b2	The SS transmits a ROUTING AREA UPDATE ACCEPT message.	<--	ROUTING AREA UPDATE ACCEPT
1b3	The UE transmits a ROUTING AREA UPDATE COMPLETE message.	-->	ROUTING AREA UPDATE COMPLETE
-	EXCEPTION: Steps 1c1 and 1c6 specify the location updating procedure when GERAN cell is in NMO II and the UE is in condition C2 and the UE is not registered to the LAC of this cell.	-	-
1c1	The UE transmits a ROUTING AREA UPDATE REQUEST message with update type='RA Update'.	-->	ROUTING AREA UPDATE REQUEST
1c2	The SS transmits a ROUTING AREA UPDATE ACCEPT message.	<--	ROUTING AREA UPDATE ACCEPT
1c3	The UE transmits a ROUTING AREA UPDATE COMPLETE message.	-->	ROUTING AREA UPDATE COMPLETE
1c4	The UE transmits a LOCATION UPDATING REQUEST message.	-->	LOCATION UPDATING REQUEST
1c4A1	The UE transmits a *Classmark Change* message	-->	CLASSMARK CHANGE
-	EXCEPTION: The next step describes behaviour that depends on UE capability.	-	-
1c4A2	IF pc_UTRA THEN the UE transmits a *Utran Classmark Change* message.	-->	UTRAN CLASSMARK CHANGE.
1c5	The SS transmits a LOCATION UPDATING ACCEPT	<--	LOCATION UPDATING ACCEPT
1c6	The UE transmits a TMSI REALLOCATION COMPLETE		TMSI REALLOCATION COMPLETE

10.2.4 CC disconnect procedure

10.2.4.1 Procedure

Table 10.2.4.1-1: CC disconnect procedure

Step	Procedure	Message Sequence	
		U - S	Message
1	The SS transmits a DISCONNECT message.	<--	DISCONNECT
2	The UE transmits a RELEASE message.	-->	RELEASE
3	The SS transmits a RELEASE COMPLETE message.	<--	RELEASE COMPLETE
4	The SS transmits a CHANNEL RELEASE message.	<--	CHANNEL RELEASE

10.2.5 CS fallback procedure

10.2.5.1 Procedure

Table 10.2.5.1-1: CS fallback procedure MO call

Step	Procedure	Message Sequence	
		U - S	Message
-	EXCEPTION: Steps 1a1 and 1a2 specify the MO call procedure.	-	-
1a1	The UE transmits a CM SERVICE REQUEST message.	-->	CM SERVICE REQUEST
1a2	The SS transmits a CM SERVICE REJECT with the reject cause #32 (Service option not supported)	<--	CM SERVICE REJECT
-	EXCEPTION: Step 1b1 specifies the MT call procedure.	-	-
1b1	The UE transmits a PAGING RESPONSE message.	-->	PAGING RESPONSE
-	EXCEPTION: Steps 2a1 to 2a6 specify the procedure when GERAN cell is in NMO II and if the UE is in condition C2 and the UE is registered to the LAC of the current GERAN cell.	-	-
2a1	The UE transmits a LOCATION UPDATING REQUEST message.	-->	LOCATION UPDATING REQUEST
2a1A1	The UE transmits a *Classmark Change* message	-->	CLASSMARK CHANGE
-	EXCEPTION: The next step describes behaviour that depends on UE capability.	-	-
2a1A2	IF pc_UTRA THEN the UE transmits a *Utran Classmark Change* message.	-->	UTRAN CLASSMARK CHANGE.
2a2	The SS transmits a LOCATION UPDATING ACCEPT	<--	LOCATION UPDATING ACCEPT
2a3	The UE transmits a TMSI REALLOCATION COMPLETE		TMSI REALLOCATION COMPLETE
2a4	The UE transmits a ROUTING AREA UPDATE REQUEST message.	-->	ROUTING AREA UPDATE REQUEST
2a5	The SS transmits a ROUTING AREA UPDATE ACCEPT message.	<--	ROUTING AREA UPDATE ACCEPT
2a6	The UE transmits a ROUTING AREA UPDATE COMPLETE message.	-->	ROUTING AREA UPDATE COMPLETE
-	EXCEPTION: Steps 2b1 to 2b3 specify the location updating procedure when GERAN cell is in (NMO I or NMO II) and if the UE is in condition C3 and the UE is not registered to the LAC of the current GERAN cell	-	-
2b1	The UE transmits a LOCATION UPDATING	-->	LOCATION UPDATING REQUEST

Step	Procedure	Message Sequence	
		U - S	Message
	REQUEST message.		
2b1A1	The UE transmits a *Classmark Change* message	-->	CLASSMARK CHANGE
-	EXCEPTION: The next step describes behaviour that depends on UE capability.	-	-
2b1A2	IF pc_UTRA THEN the UE transmits a *Utran Classmark Change* message.	-->	UTRAN CLASSMARK CHANGE.
2b2	The SS transmits a LOCATION UPDATING ACCEPT	<--	LOCATION UPDATING ACCEPT
2b3	The UE transmits a TMSI REALLOCATION COMPLETE		TMSI REALLOCATION COMPLETE
-	EXCEPTION: Steps 2c1 to 2c3 specify the routing area updating procedure when the GERAN cell is in NMO I and the UE is in condition C2and the UE is not registered to the LAC of the current GERAN cell	-	-
2c1	The UE transmits a ROUTING AREA UPDATE REQUEST message with update type = ‘Combined RA/LA update'.	-->	ROUTING AREA UPDATE REQUEST
2c2	The SS transmits a ROUTING AREA UPDATE ACCEPT message.	<--	ROUTING AREA UPDATE ACCEPT
2c3	The UE transmits a ROUTING AREA UPDATE COMPLETE message.	-->	ROUTING AREA UPDATE COMPLETE

10.3 Postambles for E-UTRA test cases

This clause describes UE postamble states which can be used in the post condition of E-UTRA test cases defined in TS 36.523-1 [1]. The clause also specifies a set of procedures to bring the UE into these states.

10.3.1 UE postamble states and procedures for E-UTRA test cases

In order to bring the UE to switched/powered off state there are some procedures that need to be executed. The identified procedures are shown in figure 10.3.1-1.

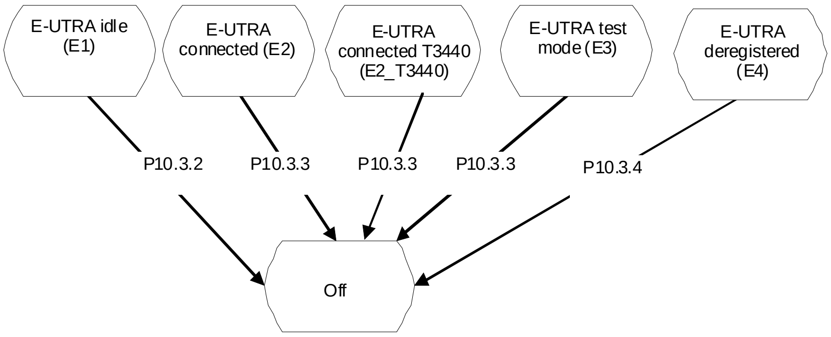

Figure 10.3.1-1: UE postamble states and procedures for E-UTRA

10.3.2 Switch/Power off procedure in State E1

10.3.2.1 Procedure

Table 10.3.2.1-1: Switch/Power off procedure

Step	Procedure	Message Sequence	
		U - S	Message
1	The UE is powered off or switched off, (see ICS)	-	-
-	EXCEPTION: Steps 2a1 to 2a4 specify behaviour if the UE supports pc_SwitchOnOff	-	-
2a1	UE transmits an *RRCConnectionRequest* message.	-->	RRC: *RRCConnectionRequest*
2a2	SS transmit an *RRCConnectionSetup* message.	<--	RRC: *RRCConnectionSetup*
-	EXCEPTION: Steps 2a3Aa1 to 2a3Aa6 specify optional behaviour if the UE has previously performed IMS registration	-	-
2a3Aa1	The UE transmits an *RRCConnectionSetupComplete* message to confirm the successful completion of the connection establishment and to initiate the IMS signalling procedure by including the SERVICE REQUEST message.	-->	RRC: *RRCConnectionSetupComplete* NAS: SERVICE REQUEST
2a3Aa2	The SS transmits a *SecurityModeCommand* message to activate AS security.	<--	RRC: *SecurityModeCommand*
2a3Aa3	The UE transmits a *SecurityModeComplete* message and establishes the initial security configuration.	-->	RRC: *SecurityModeComplete*
2a3Aa4	The SS configures a new data radio bearer, associated with the default EPS bearer context. The *RRCConnectionReconfiguration* message is using condition SRB2-DRB(1, 0). The DRB associated with default EPS bearer context obtained during the attach procedure is established	<--	RRC: *RRCConnectionReconfiguration*
	EXCEPTION: In parallel to the event described in step 2a3Aa5 below, the behaviour in TS 34.229-1[40] Annex C.30 occurs. (IMS de-registration)	-	-
2a3Aa5	The UE transmits an *RRCConnectionReconfigurationComplete* message to confirm the establishment of the new data radio bearer, associated with the default EPS bearer context.	-->	RRC: *RRCConnectionReconfigurationComplete*
2a3Aa6	The UE initiates the Detach procedure by sending DETACH REQUEST	-->	NAS: DETACH REQUEST
	EXCEPTION : Step 2a3Ba1 below specifies the behaviour if the UE has not previously performed IMS registration		
2a3Ba1	The UE transmits an *RRCConnectionSetupComplete* message to confirm the successful completion of the connection establishment and to initiate the Detach procedure by including the DETACH REQUEST message.	-->	RRC: *RRCConnectionSetupComplete* NAS: DETACH REQUEST
2a4	The SS transmits an RRC CONNECTION RELEASE message	<--	RRC CONNECTION RELEASE

10.3.3 Switch/Power off procedure in State E2 and E3

10.3.3.1 Procedure for E2 and E3

Table 10.3.3.1-1: Switch/Power off procedure

Step	Procedure	Message Sequence	
		U - S	**Message**
1	The UE is powered off or switched off (see ICS)	-	-
-	EXCEPTION: Steps 2a1 to 2a2 specify behaviour if the UE supports pc_SwitchOnOff	-	-
-	EXCEPTION : Step 2a1Aa1 to 2a1Aa2 below specifies optional behaviour if the UE has previously performed IMS registration	-	-
2a1Aa1 – 2a1Aa2	The UE performs the procedure described in TS 34.229-1[40] Annex C.30 (IMS de-registration)	-	-
2a1	The UE transmits DETACH REQUEST	-->	DETACH REQUEST
2a2	The SS transmits an RRC CONNECTION RELEASE message	<--	RRC CONNECTION RELEASE

10.3.3.2 Procedure for E2_T3440

Table 10.3.3.2-1: RRC release and switch/power off procedure

Step	Procedure	Message Sequence	
		U - S	Message
1	The SS transmits an RRC CONNECTION RELEASE message	<--	RRC CONNECTION RELEASE
2	The SS waits for 5s to ensure that the UE goes to RRC_IDLE state.	-	
3	The UE is powered off or switched off (see ICS)	-	-
-	EXCEPTION: Steps 4a1 to 4a4 specify behaviour if the UE supports pc_SwitchOnOff	-	-
4a1	UE transmits an *RRCConnectionRequest* message.	-->	RRC: *RRCConnectionRequest*
4a2	SS transmit an *RRCConnectionSetup* message.	<--	RRC: *RRCConnectionSetup*
-	EXCEPTION: Steps 4a3Aa1 to 4a3Aa6 specify optional behaviour is the UE has previously performed IMS registration	-	-
4a3Aa1	The UE transmits an *RRCConnectionSetupComplete* message to confirm the successful completion of the connection establishment and to initiate the IMS signalling procedure by including the SERVICE REQUEST message.	-->	RRC: *RRCConnectionSetupComplete* NAS: SERVICE REQUEST
4a3Aa2	The SS transmits a *SecurityModeCommand* message to activate AS security.	<--	RRC: *SecurityModeCommand*
4a3Aa3	The UE transmits a *SecurityModeComplete* message and establishes the initial security configuration.	-->	RRC: *SecurityModeComplete*
4a3Aa4	The SS configures a new data radio bearer, associated with the default EPS bearer context. The *RRCConnectionReconfiguration* message is using condition SRB2-DRB(1, 0). The DRB associated with default EPS bearer context obtained during the attach procedure is established	<--	RRC: *RRCConnectionReconfiguration*
-	EXCEPTION: In parallel to the event described in step 4a3Aa5 below, the behaviour in TS 34.229-1[40] Annex C.30 occurs. (IMS de-registration)	-	-
4a3Aa5	The UE transmits an *RRCConnectionReconfigurationComplete* message to confirm the establishment of the new data radio bearer, associated with the default EPS bearer context.	-->	RRC: *RRCConnectionReconfigurationComplete*
4a3Aa6	The UE initiates the Detach procedure by sending DETACH REQUEST	-->	NAS: DETACH REQUEST
-	EXCEPTION : Step 4a3Ba1 below specifies the behaviour if the UE has not previously performed IMS registration	-	
4a3Ba1	The UE transmits an *RRCConnectionSetupComplete* message to confirm the successful completion of the connection establishment and to initiate the Detach procedure by including the DETACH REQUEST message.	-->	RRC: *RRCConnectionSetupComplete* NAS: DETACH REQUEST
4a4	The SS transmits an RRC CONNECTION RELEASE message	<--	RRC CONNECTION RELEASE

10.3.4 Switch/Power off procedure in State E4

10.3.4.1 Procedure

Table 10.3.4.1-1: Switch/Power off procedure

Step	Procedure	Message Sequence	
		U - S	Message
1	The UE is powered off or switched off (see ICS)	-	-

10.4 Postambles for E-UTRA to HRPD test cases

This clause describes UE postamble states which can be used in the post condition of E-UTRA test cases defined in TS 36.523-1 [1]. The clause also specifies a set of procedures to bring the UE into these states.

10.4.1 UE postamble procedures for E-UTRA to HRPD (No Pre-Registration)

10.4.1.1 Registration on HRPD Cell

Table 10.4.1.1: Registration on HRPD Cell procedure

Step	Procedure	Message Sequence	
		U - S	Message
1	The UE transmits a *UATIRequest* message.	-->	*UATIRequest*
2	The SS transmits *UATIAssignment* message	<--	*UATIAssignment*
3	The UE transmits *UATIComplete* message	-->	*UATIComplete*
4	The UE transmits *ConnectionRequest* message .	-->	*ConnectionRequest*
5	The SS transmits a *TrafficChannelAssignment* message .	<--	*TrafficChannelAssignment*
6	The UE transmits *TrafficChannelcomplete* .	-->	*TrafficChannelcomplete*
7	The UE transmits *ConfigurationRequest* message for SCP configuration .	-->	*SCP:ConfigurationRequest*
8	The SS transmits a *ConfigurationResponse* message for SCP configuration .	<--	*SCP:ConfigurationResponse*
9	The UE transmits *ConfigurationReques*t message for Stream protocol .	-->	*Stream:ConfigurationReques*t
10	The SS transmits a *ConfigurationResponse* message for Stream protocol accepting EMPA bound to service network .	<--	*Stream: ConfigurationResponse*
11	The UE transmits *EMPA ConfigurationRequest* message .	-->	*EMPA:ConfigurationReques*t
12	The SS transmits an *EMPA ConfigurationResponse* message .	<--	*EMPA: ConfigurationResponse*
13	The UE transmits *ConfigurationComplete* message .	-->	*ConfigurationComplete*
14	Optionally session negotiation initiated by the SS might take place	<-->	-
15	Optionally device level authentication may take place .	<-->	-
16	Optionally Location Update procedure may take place if the SS is configured to support it.	<-->	-
17	PPP LCP negotiation is performed between the UE and the SS. EAP-AKA is selected as the authentication protocol.	<-->	-
18	Tunnelled EAP-AKA is performed between the UE and the SS.	<-->	-
19	The UE transmits *VSNCP Configure-Request* message, including a PDN-ID, PDN Type,	-->	*VSNCP: Configure-Request*

Step	Procedure	Message Sequence	
		U - S	Message
	APN, PDN Address with empty content, Protocol Configuration Options, and Attach Type = "handover". The Address Allocation Preference option contained in the Protocol Configuration Options indicates whether the UE wants to perform the IP address allocation during the attach procedure or deferred IPv4 address allocation. PDN Type indicates the UE's IP capability (IPv4, IPv6 or IPv4/v6)		
20	The SS transmits a *VSNCP Configure-Ack* message.	<--	*VSNCP: Configure-Ack*
21	The SS transmits a *VSNCP Configure-Request* message including the PDN-ID configuration option.	<--	*VSNCP: Configure-Request*
22	The UE transmits *VSNCP Configure-Ack* message.	-->	*VSNCP :Configure-Ack*
23	Optionally IPv4 address allocation by DHCPv4 may occur (depending on the Address Allocation Preference indicated by the UE at Step 19).	<-->	-
24	Optionally Link global IPv6 address configuration by ICMPv6 may occur (depending on the Address Allocation Preference indicated by the UE at Step 19).*solicitation* message.	<-->	-

10.4.1.2 Detach on HRPD Cell

Table 10.4.1.2: Detach on HRPD Cell procedure

Step	Procedure	Message Sequence	
		U - S	Message
1	The UE transmits PPP:LCP Terminate-Request	-->	LCP:Terminate-Request
2	The SS transmits PPP: LCP Terminate-Ack	<--	LCP:Terminate-Ack
3	the UE and SS perform Session update to release the reservations	<-->	-

11 Guidelines on test execution

This clause provides the guidelines on test executions.

The restriction on test case execution as listed in this clause is due to the restriction of bandwidth to accommodate the necessary number of radio frequencies for the specific operating Band as used by the test cases.

11.1 EUTRA single technology

This clause provides the guidelines for the test cases to be executed on the pure EUTRA test configuration.

A test case using more than one radio frequency, i.e. using the radio frequencies f2 or f3 or f4 specified in TS 36.508 [3], shall avoid to be executed on operating:

Band 12 with 10MHz bandwidth,

Band 13,

Band 17 with 10MHz bandwidth,

Band 18,

Band 31.

The list containing such test cases is given below:

6.1.1.1, 6.1.1.2, 6.1.1.3, 6.1.1.6, 6.1.2.7, 6.1.2.8, 6.1.2.9, 6.1.2.11, 6.1.2.13, 6.1.2.15, 6.1.2.17, 6.1.2.18, 6.1.2.20, 6.3.1, 6.3.5, 6.3.6, 6.3.9, 6.3.10,

8.1.3.4, 8.1.3.5, 8.2.2.6.2, 8.2.4.6, 8.3.1.3, 8.3.1.3a, 8.3.1.4, 8.3.1.6, 8.3.1.9, 8.3.1.10, 8.3.1.11, 8.3.1.28, 8.3.4.2, 8.3.4.3, 8.3.4.5, 8.6.2.2, 8.6.2.3a, 8.6.2.8, 8.6.2.10, 8.6.2.11, 8.6.2.12, 8.6.2.13, 8.6.4.2, 8.6.4.3, 8.6.4.6, 8.6.4.8, 8.6.4.9, 8.6.4.10, 8.6.6.2, 8.6.6.3, 8.6.6.5, 8.6.6.6, 8.6.6.7, 8.6.8.2, 8.6.8.6,

9.2.1.1.1a, 9.2.1.1.7, 9.2.1.1.13, 9.2.1.1.15, 9.2.1.1.16, 9.2.1.2.1, 9.2.1.2.10, 9.2.1.2.12, 9.2.1.2.14, 9.2.3.2.1, 9.2.3.2.12, 9.2.3.2.15, 9.2.3.2.16,

11.2.6, 11.2.7,

13.4.1.2,

17.4.1, 17.4.2.

A test case using more than two radio frequencies, i.e. using the radio frequencies f3 or f4 specified in TS 36.508 [3], shall avoid to be executed on operating:

Band 6,

Band 11,

Band 14,

Band 17 with 5MHz bandwidth,

Band 23 with 10MHz bandwidth,

Band 38

Band 39

The list containing such test cases is given below:

6.1.1.1, 6.1.1.2, 6.1.1.3, 6.1.1.6, 6.1.2.7, 6.1.2.8, 6.1.2.9, 6.1.2.15,

8.1.3.5, 8.3.1.4, 8.6.2.13, 8.6.4.3,

9.2.1.1.1a, 9.2.1.1.7, 9.2.1.1.15.

A test case using more than three radio frequencies, i.e. using the radio frequency f4 specified in TS 36.508 [3], shall avoid to be executed on operating:

Band 12 with 5MHz bandwidth,

Band 19,

Band 20,

Band 21,

Band 27,

Band 34.

The list containing such test cases is given below:

6.1.1.1, 6.1.1.2, 6.1.1.6,

9.2.1.1.7.

11.1.1 Replacement of test case execution

In case of bandwidth limitation for accommodation of more frequencies, a number of test cases can be replaced with the corresponding mirror test cases without affecting the test coverage. The table 11.1.1-1 shows the possible replacements. Only one of the paired test cases is required for execution.

Table 11.1.1-1: Replacement of test cases

Original test case	Replacing test case
6.1.1.1	6.1.1.1b
6.1.1.2	6.1.1.2a
6.1.1.3	6.1.1.3b
6.1.1.6	6.1.1.6a
6.1.2.7	6.1.2.7a
6.1.2.8	6.1.2.8a
6.1.2.9	6.1.2.9a
8.3.1.9	8.3.1.9a
8.3.1.11	8.3.1.11a
9.2.1.1.1a	9.2.1.1.1b
9.2.1.1.7	9.2.1.1.7a
9.2.1.1.13	9.2.1.1.13a
9.2.1.1.15	9.2.1.1.15a
9.2.1.1.16	9.2.1.1.16a

11.2 EUTRA – UTRA - GERAN

This clause contains the guidelines for the EUTRA interRAT test cases to be executed on the different test configurations: with only UTRA configured, with only GERAN configured or with UTRA-GERAN both configured. Whether or not an EUTRA frequency band overlaps the UTRA band, the dependency will affect the restrictions of the test execution on this band.

Editor's note: an EUTRA band overlaps the GSM band is FFS.

11.2.1 UTRA configured – GERAN not configured

This clause provides the guidelines for the EUTRA interRAT test cases where UTRA is configured, while GERAN is either not needed or not configured.

11.2.1.1 EUTRA band overlapping UTRA band

The restriction on test case execution as listed in this clause is due to the bandwidth of an EUTRA Band accommodating the necessary number of EUTRA or EUTRA, UTRA radio frequencies if an E-UTRA band overlaps the UTRA Band. A test case using more than one radio frequency, on the same EUTRA and UTRA band, shall avoid to be executed on operating

Band 12 with 10MHz bandwidth,

Band 13,

Band 17 with 10MHz bandwidth,

Band 18,

Band 31.

The list containing such test cases is given below:

6.2.1.2, 6.2.1.3, 6.2.2.1, 6.2.2.5, 6.2.2.8, 6.2.3.3, 6.2.3.3a, 6.2.3.4, 6.2.3.4a, 6.2.3.5, 6.2.3.5a, 6.2.3.6, 6.2.3.13, 6.2.3.31, 6.2.3.32, 6.2.3.33, 6.3.3, 6.3.4, 6.3.7, 6.3.8, 6.3.11, 6.3.12,

8.1.3.6, 8.1.3.6a, 8.1.3.7, 8.3.2.3, 8.3.2.3a, 8.3.2.4, 8.3.3.2, 8.3.4.4, 8.4.1.2, 8.4.1.4, 8.4.1.5, 8.4.2.2, 8.4.2.4, 8.5.2.1, 8.6.3.1, 8.6.3.4, 8.6.5.1, 8.6.7.1, 8.6.7.4, 8.6.9.1, 8.6.9.2, 8.6.10.1, 8.7.1, 9.2.1.1.11, 9.2.1.1.12, 9.2.1.2.1b, 9.2.1.2.1c, 9.2.1.2.1d, 9.2.1.2.5, 9.2.1.2.8, 9.2.1.2.9, 9.2.1.2.11, 9.2.1.2.13, 9.2.1.2.15, 9.2.2.1.3, 9.2.2.1.10, 9.2.3.1.6, 9.2.3.1.10, 9.2.3.1.11, 9.2.3.1.12, 9.2.3.1.15, 9.2.3.1.15a, 9.2.3.1.17, 9.2.3.1.18, 9.2.3.1.18a, 9.2.3.2.1a, 9.2.3.2.1b, 9.2.3.2.1c, 9.2.3.2.3, 9.2.3.2.5, 9.2.3.2.6, 9.2.3.2.7, 9.2.3.2.8, 9.2.3.2.9, 9.2.3.2.11, 9.2.3.2.13, 9.2.3.2.14, 9.2.3.3.1, 9.2.3.3.2, 9.2.3.3.3, 9.2.3.3.4, 9.2.3.3.5, 9.2.3.3.5a, 9.2.3.3.6, 9.3.1.4, 9.3.1.5, 9.3.1.6,

11.2.10, 11.2.11,

13.1.2, 13.1.2a, 13.1.3, 13.1.4, 13.1.5, 13.1.15, 13.1.16, 13.3.2.1, 13.4.2.1, 13.4.2.4, 13.4.3.1, 13.4.3.2, 13.4.3.4, 13.4.2.6, 13.4.3.7, 13.4.3.8, 13.4.3.9, 13.4.3.10, 13.4.3.11, 13.4.3.12, 13.4.3.13, 13.4.3.14, 13.4.3.16.

A test case using more than two radio frequencies on the same EUTRA and UTRA band shall avoid to be executed on operating:

Band 6,

Band 11,

Band 14,

Band 17 with 5MHz bandwidth,

Band 23 with 10MHz bandwidth,

Band 38,

Band 39.

The list containing such test cases is given below:

6.2.1.2, 6.2.1.3,

8.6.3.4, 8.6.74,

9.2.1.2.9, 9.2.1.2.11, 9.2.1.2.13, 9.2.3.1.15, 9.2.3.1.18, 9.2.3.2.5, 9.2.3.2.6, 9.2.3.2.7, 9.2.3.2.8, 9.2.3.2.11, 9.2.3.2.13, 9.2.3.2.14.

A test case using more than three radio frequencies, on the same EUTRA and UTRA band shall avoid to be executed on operating

Band 12 with 5MHz bandwidth,

Band 19,

Band 20,

Band 21,

Band 27,

Band 34.

The list containing such test cases is given below:

9.2.1.2.13, 9.2.3.2.13.

11.2.1.2 EUTRA band not overlapping UTRA band

The restriction on test case execution as listed in this clause is due to the bandwidth of an EUTRA Band accommodating the necessary number of EUTRA radio frequencies. A test case using more than one radio frequency shall avoid to be executed on E-UTRA operating

Band 12 with 10MHz bandwidth,

Band 13,

Band 17 with 10MHz bandwidth,

Band 18,

Band 31.

The list containing such test cases is given below:

6.2.1.2, 6.2.1.3,

8.6.3.4, 8.6.74,

9.2.1.2.9, 9.2.1.2.11, 9.2.1.2.13, 9.2.3.1.15, 9.2.3.1.18, 9.2.3.2.5, 9.2.3.2.6, 9.2.3.2.7, 9.2.3.2.8, 9.2.3.2.11, 9.2.3.2.13, 9.2.3.2.14,

A test case using more than two radio frequencies shall avoid to be executed on E-UTRA operating

Band 6,

Band 11,

Band 14,

Band 17 with 5MHz bandwidth,

Band 23 with 10MHz bandwidth,

Band 38,

Band 39.

The list containing such test cases is given below:

9.2.1.2.13, 9.2.3.2.13.

11.2.2 GERAN configured - UTRA not configured

This clause provides the guidelines for the EUTRA/GERAN test cases where UTRA is either not needed or not configured. The restriction on test case execution as listed in this clause is due to the restriction of bandwidth of an EUTRA Band accommodating the necessary number of EUTRA radio frequencies.

A test case using more than one radio frequency shall avoid to be executed on E-UTRA operating

Band 12 with 10MHz bandwidth,

Band 13,

Band 17 with 10MHz bandwidth,

Band 18,

Band 31

The list containing such test cases is given below:

6.2.1.4, 6.2.3.17, 6.2.3.18,

8.3.2.2,

9.2.1.2.9, 9.2.1.2.11, 9.2.1.2.13, 9.2.3.1.15, 9.2.3.1.18, 9.2.3.2.5, 9.2.3.2.6, 9.2.3.2.7, 9.2.3.2.8, 9.2.3.2.11, 9.2.3.2.13, 9.2.3.2.14.

A test case using more than two radio frequencies, i.e. using the radio frequencies f3 or f4 specified in TS 36.508 [3], shall avoid to be executed on operating:

Band 6,

Band 11,

Band 14,

Band 17 with 5MHz bandwidth,

Band 23 with 10MHz bandwidth,

Band 38

Band 39

The list containing such test cases is given below:

9.2.1.2.13, 9.2.3.2.13.

11.2.3 Neither UTRA nor GERAN configured

Certain EMM test cases can be executed as EUTRA_Only configuration despite of UTRA or GERAN test branches included in the test cases. The restriction on test case execution as listed in this clause is due to the bandwidth of an EUTRA Band accommodating the necessary number of EUTRA radio frequencies.

A test case using more than one radio frequency shall avoid to be executed on E-UTRA operating

Band 12 with 10MHz bandwidth,

Band 13,

Band 17 with 10MHz bandwidth,

Band 18,

Band 31.

The list containing such test cases is given below:

9.2.3.1.15, 9.2.3.1.18.

11.2.4 Both UTRA and GERAN configured

This clause provides the guidelines for the EUTRA - UTRA - GERAN test cases where three RAT technologies are simultaneously configured.

11.2.4.1 EUTRA band overlapping UTRA band

The restriction on test case execution as listed in this clause is due to the bandwidth of an EUTRA Band accommodating the necessary number of EUTRA or EUTRA, UTRA radio frequencies if an E-UTRA band overlaps the UTRA Band.

A test case using more than one radio frequency shall avoid to be executed on E-UTRA operating

Band 12 with 10MHz bandwidth,

Band 13,

Band 17 with 10MHz bandwidth,

Band 18,

Band 31.

The list containing such test cases is given below:

6.2.1.1, 8.3.2.5, 8.3.2.6,

9.2.1.2.6, 9.2.1.2.7, 11.2.8

A test case using more than two radio frequencies, i.e. using the radio frequencies f3 or f4 specified in TS 36.508 [3], shall avoid to be executed on operating:

Band 6,

Band 11,

Band 14,

Band 17 with 5MHz bandwidth,

Band 23 with 10MHz bandwidth,

Band 38

Band 39

The list containing such test cases is given below:

6.2.1.1.

11.2.4.2 EUTRA band not overlapping UTRA band

The restriction on test case execution as listed in this clause is due to the restriction of bandwidth of an EUTRA Band accommodating the necessary number of EUTRA radio frequencies.

A test case using more than one radio frequency shall avoid to be executed on E-UTRA operating

Band 12 with 10MHz bandwidth,

Band 13,

Band 17 with 10MHz bandwidth,

Band 18,

Band 31.

The list containing such test cases is given below:

6.2.1.1

11.2.5 Replacement of test case execution

In case of bandwidth limitation for accommodation of more frequencies, a number of te st cases can be replaced with the corresponding mirror test cases without affecting the test coverage. The table 11.2.1.5-1 shows the possible replacements. Only one of the paired test cases is required for execution.

Table 11.2.5-1: Replacement of interRAT test cases

Original test case	Replacing test case
9.2.3.1.15	9.2.3.1.15a
9.2.3.1.18	9.2.3.1.18a

11.3 Guidelines for EUTRA inter-band

The restriction on test case execution as listed in this clause is due to the restriction of bandwidth of an EUTRA band accommodating the necessary number of EUTRA radio frequencies. The inter-band test includes also EUTRA FDD-TDD and inter-band carrier aggregation tests.

11.3.1 Primary operating band

A t est case using more than one radio frequency on the first operating band, shall avoid to be executed on operating

Band 12 with 10MHz bandwidth,

Band 13,

Band 17 with 10MHz bandwidth,

Band 18,

Band 31.

The list containing such test cases is given below:

6.1.2.15a, 8.1.3.12.

11.3.2 Secondary operating band for inter-band cells

Test case using more than one radio frequency, on the second operating band, shall avoid to be executed on operating

Band 12 with 10MHz bandwidth,

Band 13,

Band 17 with 10MHz bandwidth,

Band 18,

Band 31.

The list containing such test cases is given below:

6.1.1.1a, 6.1.1.3a, 6.1.1.4a, 6.1.2.16, 8.1.3.11a, 8.1.3.12b, 8.2.4.13a, 8.2.4.14a, 8.3.1.12a, 8.3.1.14a, 8.6.4.4.

11.3.3 Replacement of test case execution

In case of bandwidth limitation for accommodation of more frequencies, a number of test cases can be replaced with the corresponding mirror test cases without affecting the test coverage. The table 11.3.3-1 shows the possible replacements. Only one of the paired test cases is required for execution.

Table 11.3.3-1: Replacement of test cases

Original test case	Replacing test case
8.1.3.12	8.1.3.12b

11.4 Guidelines for EUTRA CA

The restriction on CA test case execution as listed in this clause is due to the restriction of bandwidth of an EUTRA CA band accommodating the necessary number of EUTRA radio frequencies.

11.4.1 CA contiguous Intra-band operation

Test case using more than two radio frequencies, i.e. using the radio frequencies f3 or f4 specified in TS 36.508 [3], shall avoid to be executed on E-UTRA CA Configuration:

CA_38C.

The list containing such test cases is given below:

8.2.4.19.1, 8.2.4.21.1

11.4.2 CA Inter-band operation

Test case using more than one radio frequency on the primary band, i.e. using the radio frequency f2 specified in TS 36.508 [3], shall avoid to be executed on E-UTRA CA Configuration:

CA_1A-18A,

CA_11A-18A.

The list containing such test cases is given below:

8.2.4.19.2

Test case using more than one radio frequency on the secondary band, i.e. using the radio frequency f6 specified in TS 36.508 [3], shall avoid to be executed on E-UTRA CA Configuration:

CA_1A-19A,

CA_1A-21A,

CA_4A-13A,

CA_2A-17A,

CA_4A-17A.

The list containing such test cases is given below:

8.2.4.21.2 These test cases can be run with reverse allocation of PCell and SCell as specified in TS 36.508 [3] table 6.2.3.2-3.

Annex A (normative): Test Suites

This annex contains the approved TTCN Test Suites. The test suites have been produced using the Testing and Test Control Notation version 3 (TTCN3) according to ES 201 873-1 [13].

A.1 Baseline of specifications

Table A.1 shows the baseline of the relevant cores specifications and the test specifications which the delivered TTCN test suites are referred to.

Table A.1: References of the test and Core specifications

Core specifications baseline	TS 36.331 [19]
	TS 24.301 [21]
Test specifications	TS 36.508 [3]
	TS 36.509 [4]
	TS 36.523-1 [1]
	TS 36.523-2 [2]

A.2 E-UTRA Test Suites

Table A.2 lists all approved test cases. An "X" in columns FDD or TDD indicates the test case approved for the respective variant.

Table A.2: E-UTRA/EPS TTCN test cases

Test case	Description	FDD	TDD
6.1.1.1	PLMN selection of RPLMN, HPLMN/EHPLMN, UPLMN and OPLMN/Automatic mode	X	X
6.1.1.1a	PLMN selection / Automatic mode / between FDD and TDD	X	X
6.1.1.1b	PLMN selection of RPLMN, HPLMN/EHPLMN, UPLMN and OPLMN / Automatic mode / Single Frequency operation	X	X
6.1.1.2	PLMN selection of “Other PLMN/access technology combinations” / Automatic mode	X	X
6.1.1.2a	PLMN selection of “Other PLMN/access technology combinations” / Automatic mode / Single Frequency operation	X	X
6.1.1.3	Cell reselection of ePLMN in manual mode	X	X
6.1.1.3a	Cell reselection of ePLMN in manual mode / between FDD and TDD	X	X
6.1.1.3b	Cell reselection of ePLMN in manual mode / Single Frequency operation	X	X
6.1.1.4	PLMN selection in shared network environment / Automatic mode	X	X
6.1.1.4a	PLMN selection in shared network environment / Automatic mode / between FDD and TDD	X	X
6.1.1.6	PLMN selection of RPLMN, HPLMN/EHPLMN, UPLMN and OPLMN / Automatic mode / User reselection	X	X
6.1.1.6a	PLMN selection of RPLMN, HPLMN/EHPLMN, UPLMN and OPLMN / Automatic mode / User reselection / Single Frequency operation	X	X
6.1.2.2	Cell selection, Qrxlevmin	X	X
6.1.2.2a	Cell selection / Qqualmin	X	X
6.1.2.3	Cell selection/Intra E-UTRAN/Serving cell becomes non-suitable (S<0 or barred)	X	X
6.1.2.3a	Cell selection / Intra E-UTRAN / Serving cell becomes non-suitable (Srxlev > 0 and Squal <0)	X	X
6.1.2.4	Cell reselection	X	X
6.1.2.5	Cell reselection for inter-band operation	X	X
6.1.2.6	Cell reselection using Qhyst, Qoffset and Treselection	X	X
6.1.2.7	Cell reselection/Equivalent PLMN	X	X
6.1.2.7a	Cell reselection / Equivalent PLMN / Single Frequency operation	X	X
6.1.2.8	Cell reselection using cell status and cell reservations/Access control class 0 to 9	X	X
6.1.2.8a	Cell reselection using cell status and cell reservations / Access control class 0 to 9 / Single	X	X

Test case	Description	FDD	TDD
	Frequency operation		
6.1.2.9	Cell reselection using cell status and cell reservations/Access control class 11 to15	X	X
6.1.2.9a	Cell reselection using cell status and cell reservations / Access control class 11 to 15 / Single Frequency operation	X	X
6.1.2.10	Cell reselection in shared network environment	X	X
6.1.2.11	Inter-frequency cell reselection	X	X
6.1.2.12	Cell reselection / Cell-specific reselection parameters provided by the network in a neighbouring cell list	X	X
6.1.2.13	Cell re-selection, Sintrasearch, Snonintrasearch	X	X
6.1.2.14	Speed-dependent cell reselection	X	X
6.1.2.15	Inter-frequency cell reselection according to cell reselection priority provided by SIBs	X	X
6.1.2.15a	Inter-frequency cell reselection according to cell reselection priority provided by SIBs / Between FDD and TDD	X	X
6.1.2.15b	Inter-band cell reselection according to cell reselection priority provided by SIBs	X	
6.1.2.16	Cell reselection / interband operation / Between FDD and TDD	X	X
6.1.2.17	Cell reselection for Squal to check against SIntraSearchQ and SnonIntraSearchQ	X	X
6.1.2.18	Inter-frequency cell reselection based on common priority information with parameters ThreshX, HighQ, ThreshX, LowQ and ThreshServing, LowQ	X	X
6.1.2.19	Intra-frequency cell reselection / MFBI	X	
6.1.2.20	Inter-frequency cell reselection / MFBI	X	
6.1.2.21	Inter-band cell reselection / MFBI	X	
6.2.1.1	Inter-RAT PLMN selection / Selection of correct RAT for OPLMN / Automatic mode	X	X
6.2.1.2	Inter-RAT PLMN selection / Selection of correct RAT for UPLMN / Automatic mode	X	X
6.2.1.3	Inter-RAT PLMN selection / Selection of correct PLMN and RAT in shared network environment / Automatic mode	X	X
6.2.1.4	Inter-RAT PLMN selection / Selection of correct RAT from the OPLMN list / Manual mode	X	X
6.2.1.6	Inter-RAT background HPLMN search / Search for correct RAT for HPLMN / Automatic mode	X	X
6.2.2.1	Inter-RAT cell selection/From E-UTRA RRC_IDLE to UTRA_Idle/Serving cell becomes non-suitable	X	X
6.2.2.2	Inter-RAT cell selection / From E-UTRA RRC_IDLE to GSM_Idle/GPRS Packet_idle / Serving cell becomes non-suitable	X	X
6.2.2.3	Inter-RAT cell selection / From E-UTRA RRC_IDLE to HRPD Idle / Serving cell becomes non-suitable	X	-
6.2.2.4	Inter-RAT cell selection / From E-UTRA RRC_IDLE to 1xRTT Dormant / Serving cell becomes non-suitable	X	-
6.2.2.5	Cell selection / No USIM	X	X
6.2.2.6	Inter-RAT Cell selection / From GSM_Idle/GPRS Packet_idle to E-UTRA RRC_IDLE / Serving cell becomes non-suitable	X	X
6.2.2.7	Inter-RAT Cell selection / From GSM_Idle/GPRS Packet_idle to E-UTRA RRC_IDLE / Serving cell is barred	X	X
6.2.2.8	Inter-RAT cell selection / From UTRA_Idle to E-UTRA RRC_IDLE / Serving cell becomes non-suitable	X	X
6.2.3.1	Inter-RAT cell reselection / From E-UTRA RRC_IDLE to GSM_Idle/GPRS Packet_Idle	X	X
6.2.3.1a	Inter-RAT cell reselection / From E-UTRA RRC_IDLE to GSM_Idle/GPRS Packet_Idle (Squal < ThreshServing, LowQ, Srxlev > ThreshX, LowP and Srxlev > ThreshX, HighP)	X	
6.2.3.3	Inter-RAT cell reselection/From UTRA_Idle to E-UTRA RRC_IDLE	X	X
6.2.3.3a	Inter-RAT cell reselection / From UTRA_Idle to E-UTRA RRC_IDLE (QqualminEUTRA, SqualServingCell < Threshserving,low2, SqualnonServingCell,x > Threshx, low2 and SqualnonServingCell,x > Threshx, high2)	X	-
6.2.3.4	Inter-RAT cell reselection / From UTRA CELL_PCH state to E-UTRA RRC_IDLE	X	X
6.2.3.4a	Inter-RAT cell reselection / From UTRA_CELL_PCH state to E-UTRA RRC_IDLE based on RSRQ+RSRP evaluation	X	X
6.2.3.5	Inter-RAT cell reselection/From E-UTRA RRC_IDLE to UTRA_Idle	X	X
6.2.3.5a	Inter-RAT cell reselection / From E-UTRA RRC_IDLE to UTRA_Idle (Squal > ThreshX, HighQ, Squal < ThreshServing, LowQ, Squal > ThreshX, LowQ and SnonIntraSearchQ)	X	-
6.2.3.6	Inter-RAT cell reselection / From E-UTRA RRC_IDLE to UTRA_Idle according to RAT priority provided by dedicated signalling	X	X
6.2.3.7	Inter-RAT cell reselection / From E-UTRA RRC_IDLE to HRPD Idle / HRPD cell is higher reselection priority than E-UTRA	X	-
6.2.3.7a	Inter-RAT cell reselection / From E-UTRA RRC_IDLE to HRPD Idle / HRPD cell is higher reselection priority than E-UTRA (Srxlev > ThreshX, HighP)	X	-
6.2.3.8	Inter-RAT cell reselection / From E-UTRA RRC_IDLE to HRPD Idle / HRPD cell is lower reselection priority than E-UTRA	X	-
6.2.3.8a	Inter-RAT cell reselection / From E-UTRA RRC_IDLE to HRPD Idle / HRPD cell is lower	X	-

Test case	Description	FDD	TDD
	reselection priority than E-UTRA (Squal < ThreshServing, LowQ and Srxlev > ThreshX, LowP)		
6.2.3.9	Inter-RAT cell reselection / From E-UTRA RRC_IDLE to 1xRTT Dormant / 1xRTT cell is higher reselection priority than E-UTRA	X	-
6.2.3.9a	Inter-RAT cell reselection / From E-UTRA RRC_IDLE to 1xRTT Dormant / 1xRTT cell is higher reselection priority than E-UTRA (Srxlev > ThreshX, HighP)	X	-
6.2.3.10	Inter-RAT cell reselection / From E-UTRA RRC_IDLE to 1xRTT Dormant / 1xRTT cell is lower reselection priority than E-UTRA	X	-
6.2.3.10a	Inter-RAT cell reselection / From E-UTRA RRC_IDLE to 1xRTT Dormant / 1xRTT cell is lower reselection priority than E-UTRA (Squal < ThreshServing, LowQ and Srxlev > ThreshX, LowP)	X	-
6.2.3.13	Inter-RAT cell reselection / From UTRA_Idle to E-UTRA RRC_IDLE according to RAT priority provided by dedicated signalling	X	X
6.2.3.14	Inter-RAT cell reselection / From GSM_Idle/GPRS Packet_Idle to E-UTRA / Priority of E-UTRA cells are higher than the serving cell	X	X
6.2.3.15	Inter-RAT cell reselection / From GSM_Idle/GPRS Packet_Idle to E-UTRA / Priority of E-UTRA cells are lower than the serving cell	X	X
6.2.3.16	Inter-RAT cell reselection / From GSM_Idle to E-UTRAN /based on H_PRIO criteria	X	X
6.2.3.17	Inter-RAT cell reselection / From GSM_Idle/GPRS Packet_Idle to E-UTRA / Priority E-UTRA cells	X	X
6.2.3.18	Inter-RAT cell reselection / From GSM_Idle/GPRS Packet_Idle to E-UTRA / Blacklisted E-UTRA cells	X	X
6.2.3.19	Inter-RAT cell redirection to E-UTRA cell from GSM TCH mode	X	X
6.2.3.20	Inter-RAT cell redirection to E-UTRA cell from GSM TCH mode and no suitable cell available	X	X
6.2.3.21	Inter-RAT autonomous cell reselection GPRS Packet_transfer NC0 mode to E-UTRA	X	X
6.2.3.23	Inter-RAT cell reselection from GPRS Packet_transfer to E-UTRA in CCN mode / PACKET CELL CHANGE CONTINUE	X	
6.2.3.24	Inter-RAT cell reselection from GPRS Packet_transfer to E-UTRA in CCN mode / PACKET CELL CHANGE ORDER	X	
6.2.3.31	Inter-RAT cell reselection / From UTRA_Idle (low priority) to E-UTRA RRC_IDLE (high priority) according to RAT priority provided by dedicated signalling	X	X
6.2.3.32	Inter-RAT cell re-selection / From E-UTRA RRC_IDLE to UTRA_Idle, Snonintrasearch	X	X
6.2.3.33	Inter-RAT cell reselection / From E-UTRA RRC_IDLE to UTRA_Idle / Squal based cell reselection parameters are broadcasted in E-UTRAN / UE does not support Squal based cell reselection in UTRAN	X	X
6.3.1	Inter-frequency cell reselection / From E-UTRA RRC_IDLE non-CSG cell to E-UTRA RRC_IDLE CSG cell	X	X
6.3.5	Manual support for CSG ID selection	X	
6.3.6	Ignoring CSG cells in cell selection/reselection when allowed CSG list is empty or not supported	X	X
6.3.9	Manual CSG ID selection across PLMNs	X	X
6.4.1	Manual CSG ID selection / Hybrid cell whose CSG ID is not in the Allowed CSG list nor Operator's list	X	X
6.4.5	Inter-RAT cell reselection / From UTRA_Idle to E-UTRA RRC_IDLE member hybrid cell	X	
7.1.1.1	CCCH mapped to UL SCH/ DL-SCH/Reserved LCID (Logical Channel ID)	X	X
7.1.1.2	DTCH or DCCH mapped to UL SCH/ DL-SCH/Reserved Logical Channel ID	X	X
7.1.2.1	Correct selection of RACH parameters/Random access preamble and PRACH resource explicitly signalled to the UE by RRC/Non-contention based random access procedure	X	X
7.1.2.2	Correct selection of RACH parameters/Random access preamble and PRACH resource explicitly signalled to the UE in PDCCH Order/Non-contention based random access procedure	X	X
7.1.2.3	Correct selection of RACH parameters/Preamble selected by MAC itself/Contention based random access procedure	X	X
7.1.2.4	Random access procedure/Successful	X	X
7.1.2.5	Random access procedure/MAC PDU containing multiple RARs	X	X
7.1.2.6	Maintenance of uplink time alignment	X	X
7.1.2.7	MAC contention resolution/Temporary C-RNTI	X	X
7.1.2.8	MAC contention resolution/C-RNTI	X	X
7.1.2.9	MAC backoff indicator	X	X
7.1.3.1	Correct handling of DL assignment/Dynamic case	X	X
7.1.3.2	Correct handling of DL assignment / Semi-persistent case	X	X
7.1.3.3	MAC PDU header handling	X	X
7.1.3.4	Correct HARQ process handling/DCCH and DTCH	X	X
7.1.3.5	Correct HARQ process handling/CCCH	X	X

Test case	Description	FDD	TDD
7.1.3.6	Correct HARQ process handling/BCCH	X	X
7.1.3.7	MAC padding	X	X
7.1.3.9	MAC reset DL	X	X
7.1.4.1	Correct handling of UL assignment/Dynamic case	X	X
7.1.4.2	Correct handling of UL assignment / Semi-persistent case	X	
7.1.4.3	Logical channel prioritization handling	X	X
7.1.4.4	Correct handling of MAC control information/Scheduling requests and PUCCH	X	X
7.1.4.5	Correct handling of MAC control information/Scheduling requests and random access procedure	X	X
7.1.4.6	Correct handling of MAC control information/Buffer status/UL data arrive in the UE Tx buffer and retransmission of BSR/Regular BSR	X	X
7.1.4.7	Correct handling of MAC control information/Buffer Status/UL resources are allocated/Padding BSR	X	X
7.1.4.7a	Correct handling of MAC control information / Buffer Status / UL resources are allocated / Cancellation of Padding BSR	X	X
7.1.4.8	Correct handling of MAC control information/Buffer status/Periodic BSR timer expires	X	X
7.1.4.10	MAC padding	X	X
7.1.4.11	Correct HARQ process handling	X	X
7.1.4.12	MAC reset UL	X	X
7.1.4.13	MAC PDU header handling	X	X
7.1.4.14	Correct HARQ process handling / TTI bundling	X	X
7.1.4.15	UE power headroom reporting/Periodic reporting	X	X
7.1.4.16	UE power headroom Reporting/DL pathloss change reporting	X	X
7.1.4.18	CA / Correct handling of MAC control information / Buffer Status / UL data arrive in the UE Tx buffer / Extended buffer size	X	X
7.1.4.21	CA / UE power headroom reporting / Extended PHR	X	X
7.1.5.1	Inter-TTI PUSCH hopping by uplink grant	X	X
7.1.5.2	Predefined intra-TTI PUSCH hopping (N_sb=1)	X	X
7.1.5.3	Predefined intra-TTI PUSCH hopping (N_sb=2/3/4)	X	X
7.1.5.4	Predefined inter-TTI PUSCH hopping (N_sb=1)	X	X
7.1.5.5	Predefined inter-TTI PUSCH hopping (N_sb=2/3/4)	X	X
7.1.6.1	DRX operation/Short cycle not configured/Parameters configured by RRC	X	X
7.1.6.2	DRX operation/Short cycle not configured/DRX command MAC control element reception	X	X
7.1.7.1.1	DL-SCH transport block size selection/DCI format 1/RA type 0	X	X
7.1.7.1.2	DL-SCH transport block size selection/DCI format 1/RA type 1	X	X
7.1.7.1.3	DL-SCH transport block size selection/DCI format 1A/RA type 2/Localised VRB	X	X
7.1.7.1.4	DL-SCH transport block size selection/DCI format 1A/RA type 2/Distributed VRB	X	X
7.1.7.1.5	DL-SCH transport block size selection / DCI format 2A / RA type 0 / Two transport blocks enabled / Transport block to codeword swap flag value set to 0	X	X
7.1.7.1.6	DL-SCH transport block size selection / DCI format 2A / RA type 1/ Two transport blocks enabled / Transport block to codeword swap flag value set to 1	X	X
7.1.7.2.1	UL-SCH transport block size selection/DCI format 0	X	X
7.1.8.1	Periodic RI reporting using PUCCH / Category 1 UE / Transmission mode 3/4	X	X
7.2.2.1	UM RLC/Segmentation and reassembly/5-bit SN/Framing info field	X	X
7.2.2.2	UM RLC/Segmentation and reassembly/10-bit SN/Framing info field	X	X
7.2.2.3	UM RLC/Reassembly/5-bit SN/LI value > PDU size	X	X
7.2.2.4	UM RLC/Reassembly/10-bit SN/LI value > PDU size	X	X
7.2.2.5.1	UM RLC/5-bit SN/Correct use of sequence numbering	X	X
7.2.2.5.2	UM RLC/5-bit SN/Correct use of sequence numbering	X	X
7.2.2.6	UM RLC/Concatenation, segmentation and reassembly	X	X
7.2.2.7	UM RLC/In sequence delivery of upper layer PDUs without residual loss of RLC PDUs/Maximum re-ordering delay below t-Reordering	X	X
7.2.2.8	UM RLC/In sequence delivery of upper layer PDUs without residual loss of RLC PDUs/Maximum re-ordering delay exceeds t-Reordering	X	X
7.2.2.9	UM RLC/In sequence delivery of upper layer PDUs with residual loss of RLC PDUs/Maximum re-ordering delay exceeds t-Reordering	X	X
7.2.2.10	UM RLC/Duplicate detection of RLC PDUs	X	X
7.2.2.11	UM RLC/RLC re-establishment procedure	X	X
7.2.3.1	AM RLC/Concatenation and reassembly	X	X
7.2.3.2	AM RLC/Segmentation and reassembly/No PDU segmentation	X	X
7.2.3.3	AM RLC/Segmentation and reassembly/Framing info field	X	X
7.2.3.4	AM RLC/Segmentation and reassembly/Different numbers of length indicators	X	X
7.2.3.5	AM RLC/Reassembly/LI value > PDU size	X	X
7.2.3.6	AM RLC/Correct use of sequence numbering	X	X

Test case	Description	FDD	TDD
7.2.3.7	AM RLC/Control of transmit window	X	X
7.2.3.8	AM RLC/Control of receive window	X	X
7.2.3.9	AM RLC/Polling for status	X	X
7.2.3.10	AM RLC/Receiver status triggers	X	X
7.2.3.13	AM RLC/Reconfiguration of RLC parameters by upper layers	X	X
7.2.3.14	AM RLC/In sequence delivery of upper layers PDUs	X	X
7.2.3.15	AM RLC/Re-ordering of RLC PDU segments	X	X
7.2.3.16	AM RLC/Re-transmission of RLC PDU without re-segmentation	X	X
7.2.3.17	AM RLC/Re-segmentation RLC PDU/SO, FI, LSF	X	X
7.2.3.18	AM RLC/Reassembly/AMD PDU reassembly from AMD PDU segments, Segmentation Offset and Last Segment Flag fields	X	X
7.2.3.20	AM RLC/Duplicate detection of RLC PDUs	X	X
7.2.3.21	AM RLC/RLC re-establishment at RRC connection reconfiguration including mobilityControlInfo IE	X	X
7.3.1.1	Maintenance of PDCP sequence numbers/User plane/RLC AM	X	X
7.3.1.2	Maintenance of PDCP sequence numbers/User plane/RLC UM/Short PDCP SN (7 bits)	X	X
7.3.1.3	Maintenance of PDCP sequence numbers/User plane/RLC UM/Long PDCP SN (12 bits)	X	X
7.3.3.1	Ciphering and deciphering/Correct functionality of EPS AS encryption algorithms/SNOW 3G	X	X
7.3.3.2	Ciphering and deciphering/Correct functionality of EPS UP encryption algorithms/SNOW 3G	X	X
7.3.3.3	Ciphering and deciphering/Correct functionality of EPS AS encryption algorithms/AES	X	X
7.3.3.4	Ciphering and deciphering/Correct functionality of EPS UP encryption algorithms/AES	X	X
7.3.3.5	Ciphering and deciphering / Correct functionality of EPS AS encryption algorithms / ZUC	X	X
7.3.3.6	Ciphering and deciphering / Correct functionality of EPS AS encryption algorithms / ZUC	X	X
7.3.4.1	Integrity protection/Correct functionality of EPS AS integrity algorithms/SNOW 3G	X	X
7.3.4.2	Integrity protection/Correct functionality of EPS AS integrity algorithms/AES	X	X
7.3.4.3	Integrity protection / Correct functionality of EPS AS integrity algorithms / ZUC	X	X
7.3.5.2	PDCP handover/Lossless handover/PDCP sequence number maintenance	X	X
7.3.5.3	PDCP handover/Non-lossless handover/PDCP sequence number maintenance	X	X
7.3.5.4	PDCP handover/Lossless handover/PDCP status report to convey the information on missing or acknowledged PDCP SDUs at handover	X	X
7.3.5.5	PDCP handover/In-order delivery and duplicate elimination in the downlink	X	X
7.3.6.1	PDCP discard	X	X
8.1.1.1	RRC/Paging for connection in idle mode	X	X
8.1.1.2	RRC/Paging for notification of BCCH modification in idle mode	X	X
8.1.1.3	RRC / Paging for connection in idle mode / Multiple paging records	X	X
8.1.1.4	RRC / Paging for connection in idle mode / Shared network environment	X	X
8.1.1.6	RRC/BCCH modification in connected mode	X	X
8.1.2.1	RRC connection establishment/Success	X	X
8.1.2.2	RRC connection establishment/Reject with wait time	X	X
8.1.2.3	RRC connection establishment/Return to idle state after T300 timeout	X	X
8.1.2.5	RRC connection establishment/0% access probability for MO calls, no restriction for MO signalling	X	X
8.1.2.6	RRC connection establishment / Non-zero percent access probability for MO calls, no restriction for MO signalling	X	X
8.1.2.7	RRC connection establishment/0% access probability for AC 0 to 9, AC 10 is barred, AC 11 to 15 are not barred, access for UE with access class in the range 11 to 15 is allowed	X	X
8.1.2.8	RRC connection establishment / Range of access baring time	X	X
8.1.2.9	RRC Connection Establishment / 0% access probability for MO calls, non-zero percent access probability for MO signalling	X	X
8.1.2.11	RRC connection establishment of emergency call	X	
8.1.2.13	RRC connection establishment / 0% access probability for MO calls, 0% access probability for MO signalling	X	X
8.1.2.14	RRC connection establishment / High speed flag	X	X
8.1.3.1	RRC connection release/Success	X	X
8.1.3.4	RRC connection release/Redirection to another E-UTRAN frequency	X	X
8.1.3.5	RRC connection release/Success/With priority information	X	X
8.1.3.6	RRC connection release/Redirection from E-UTRAN to UTRAN	X	X
8.1.3.6a	RRC connection release / Redirection from E-UTRAN to UTRAN / Pre-redirection info	X	X
8.1.3.7	RRC connection release / Redirection from UTRAN to E-UTRAN	X	X
8.1.3.8	RRC connection release / Redirection from E-UTRAN to GERAN	X	X
8.1.3.9	RRC connection release / Redirection from E-UTRAN to HRPD	X	-
8.1.3.10	RRC connection release / Redirection from E-UTRAN to 1xRTT	X	-
8.1.3.11	RRC connection release / Redirection to another E-UTRAN band	X	X
8.1.3.11a	RRC connection release / Redirection to another E-UTRAN band / Between FDD and TDD	X	X

Test case	Description	FDD	TDD
8.1.3.12	RRC connection release / Success / With priority information / Inter-band	X	X
8.1.3.12a	RRC connection release / Success / With priority information / Inter-band / Between FDD and TDD	X	X
8.2.1.1	RRC connection reconfiguration/Radio bearer establishment for transition from RRC_IDLE to RRC_CONNECTED/Success/Default bearer/Early bearer establishment	X	X
8.2.1.3	RRC connection reconfiguration/Radio bearer establishment/Success/Dedicated bearer	X	X
8.2.1.5	RRC connection reconfiguration / Radio bearer establishment for transition from RRC_IDLE to RRC CONNECTED / Success / Latency check	X	X
8.2.1.6	RRC connection reconfiguration / Radio bearer establishment for transition from RRC_IDLE to RRC CONNECTED / Success / Latency check / SecurityModeCommand and RRCConnectionReconfiguration transmitted in the same TTI	X	X
8.2.1.7	RRC connection reconfiguration/Radio bearer establishment/Success/SRB2	X	X
8.2.1.8	RRC connection reconfiguration / Radio bearer establishment / Success / Dedicated bearer / ROHC configured	X	X
8.2.2.1	RRC connection reconfiguration/Radio resource reconfiguration/Success	X	X
8.2.2.2	RRC connection reconfiguration/SRB/DRB reconfiguration/Success	X	X
8.2.2.3.1	CA / RRC connection reconfiguration / SCell addition/ modification/release / Success / Intra-band contiguous CA		X
8.2.2.3.2	CA / RRC connection reconfiguration / SCell addition/ modification/release / Success / Inter-band CA	X	
8.2.2.4.1	CA / RRC connection reconfiguration / SCell SI change / Success / Intra-band Contiguous CA	X	X
8.2.2.4.2	CA / RRC connection reconfiguration / SCell SI change / Success / Inter-band CA	X	
8.2.2.5.1	CA / RRC connection reconfiguration / SCell addition without UL / Success / Intra-band contiguous CA	X	X
8.2.2.5.2	CA / RRC connection reconfiguration / SCell addition without UL / Success / Inter-band CA	X	
8.2.3.1	RRC connection reconfiguration/Radio bearer release/Success	X	X
8.2.4.1	RRC connection reconfiguration/Handover/Success/Dedicated preamble	X	X
8.2.4.2	RRC connection reconfiguration/Handover/Success/Common preamble	X	X
8.2.4.3	RRC connection reconfiguration/Handover/Success/Intra-cell/Security reconfiguration	X	X
8.2.4.4	RRC connection reconfiguration/Handover/Failure/Intra-cell/Security reconfiguration	X	X
8.2.4.5	RRC connection reconfiguration/Handover/All parameters included	X	X
8.2.4.6	RRC connection reconfiguration/Handover/Success/Inter-frequency	X	X
8.2.4.7	RRC connection reconfiguration/Handover/Failure/Re-establishment successful	X	X
8.2.4.8	RRC connection reconfiguration / Handover / Failure / Re-establishment failure	X	X
8.2.4.9	RRC connection reconfiguration/Handover/Inter-band blind handover/Success	X	X
8.2.4.10	RRC connection reconfiguration / Handover / Between FDD and TDD	X	X
8.2.4.12	RRC connection reconfiguration / Handover / Setup and release of MIMO	X	X
8.2.4.13	RRC connection reconfiguration / Handover / Success (with measurement) / Inter-band	X	X
8.2.4.13a	RRC connection reconfiguration / Handover / Success (with measurement) / Inter-band / between FDD and TDD	X	X
8.2.4.14	RRC connection reconfiguration / Handover / Failure / Re-establishment successful / Inter-band	X	X
8.2.4.14a	RRC connection reconfiguration / Handover / Failure / Re-establishment successful / Inter-band / between FDD and TDD	X	X
8.2.4.15	RRC connection reconfiguration / Handover / Failure / Re-establishment failure / Inter-band	X	X
8.2.4.15a	RRC connection reconfiguration / Handover / Failure / Re-establishment failure / Inter-band / Between FDD and TDD	X	X
8.2.4.17.2	CA / RRC connection reconfiguration / Handover / Success / PCell Change and SCell addition / Inter-band CA	X	
8.2.4.18.2	CA / RRC connection reconfiguration / Handover / Success / SCell release / Inter‐ band CA	X	
8.2.4.19.2	CA / RRC connection reconfiguration / Handover / Success / PCell Change/ Scell no Change / Inter-band CA	X	
8.2.4.20.2	CA / RRC connection reconfiguration / Handover / Success / Scell Change / Inter-band CA	X	
8.2.4.21.2	CA / RRC connection reconfiguration / Handover / Success / SCell release / Inter-band CA	X	
8.2.4.22	RRC connection reconfiguration / Handover / MFBI / Target cell broadcasting information disregarded by the UE	X	
8.3.1.1	Measurement configuration control and reporting/Intra E-UTRAN measurements/Event A1	X	X
8.3.1.2	Measurement configuration control and reporting/Intra E-UTRAN measurements/Event A2	X	X
8.3.1.3	Measurement configuration control and reporting/Intra E-UTRAN measurements/Two simultaneous events A3 (intra and inter-frequency measurements)	X	X
8.3.1.3a	Measurement configuration control and reporting / Intra E-UTRAN measurements / Two simultaneous events A3 (intra and inter-frequency measurements) / RSRQ based	X	X

Test case	Description	FDD	TDD
	measurements		
8.3.1.4	Measurement configuration control and reporting/Intra E-UTRAN measurements/Periodic reporting (intra and inter-frequency measurements)	X	X
8.3.1.5	Measurement configuration control and reporting/Intra E-UTRAN measurements/Two simultaneous event A3 (intra-frequency measurements)	X	X
8.3.1.6	Measurement configuration control and reporting / Intra E-UTRAN measurements / Two simultaneous events A2 and A3 (inter-frequency measurements)	X	X
8.3.1.7	Measurement configuration control and reporting/Intra E-UTRAN measurements/Blacklisting	X	X
8.3.1.8	Measurement configuration control and reporting/Intra E-UTRAN measurements/Handover/IE measurement configuration present	X	X
8.3.1.9	Measurement configuration control and reporting/Intra E-UTRAN measurements/Intra-frequency handover/IE measurement configuration not present	X	X
8.3.1.9a	Measurement configuration control and reporting / Intra E-UTRAN measurements / Intra-frequency handover / IE measurement configuration not present / Single Frequency operation	X	
8.3.1.10	Measurement configuration control and reporting/Intra E-UTRAN measurements/Inter-frequency handover/IE measurement configuration not present	X	X
8.3.1.11	Measurement configuration control and reporting/Intra E-UTRAN measurements/Continuation of the measurements after RRC connection re-establishment	X	X
8.3.1.11a	Measurement configuration control and reporting / Intra Frequency measurements / Continuation of the measurements after RRC connection re-establishment / Single Frequency operation	X	
8.3.1.12	Measurement configuration control and reporting / Intra E-UTRAN measurements / Two simultaneous events A3 (Inter-band measurements)	X	X
8.3.1.12a	Measurement configuration control and reporting / Intra E-UTRAN measurements / Two simultaneous events A3 (inter-band measurements) / Between FDD and TDD	X	X
8.3.1.13	Measurement configuration control and reporting / Intra E-UTRAN measurements / Periodic reporting (intra-frequency and inter-band measurements)	X	
8.3.1.13a	Measurement configuration control and reporting / Intra E-UTRAN measurements / Periodic reporting (intra-frequency and inter-band measurements) / Between FDD and TDD	X	X
8.3.1.14	Measurement configuration control and reporting / Intra E-UTRAN measurements / Two simultaneous events A2 and A3 (Inter-band measurements)	X	X
8.3.1.14a	Measurement configuration control and reporting / Intra E-UTRAN measurements / Two simultaneous events A2 and A3 (inter-band measurements) / Between FDD and TDD	X	X
8.3.1.15	Measurement configuration control and reporting / Intra E-UTRAN measurements / Inter-band handover / IE measurement configuration not present	X	X
8.3.1.15a	Measurement configuration control and reporting / Intra E-UTRAN measurements / Inter-band handover / IE measurement configuration not present / Between FDD and TDD	X	X
8.3.1.16	Measurement configuration control and reporting / Intra E-UTRAN measurements / Continuation of the measurements after RRC connection re-establishment / Inter-band	X	X
8.3.1.16a	Measurement configuration control and reporting / Intra E-UTRAN measurements / Continuation of the measurements after RRC connection re-establishment / Inter-band / Between FDD and TDD	X	X
8.3.1.17.1	CA / Measurement configuration control and reporting / Intra E-UTRAN measurements / Event A6 / Intra-band contiguous CA		X
8.3.1.17.2	CA / Measurement configuration control and reporting / Intra E-UTRAN measurements / Event A6 / Inter-band CA	X	
8.3.1.18.2	CA / Measurement configuration control and reporting / Intra E-UTRAN measurements / Additional measurement reporting / Inter-band CA	X	
8.3.1.22.1	CA / Measurement configuration control and reporting / Intra E-UTRAN measurements / Event A1 / Event A2 / Intra-band Contiguous CA	X	X
8.3.1.22.2	CA / Measurement configuration control and reporting / Intra E-UTRAN measurements / Event A1 / Event A2 / Inter-band CA	X	
8.3.1.23	Measurement configuration control and reporting / Intra E-UTRAN measurements / Event A4	X	X
8.3.1.24	Measurement configuration control and reporting / Intra E-UTRAN measurements / Event A5	X	X
8.3.1.25	Measurement configuration control and reporting / Intra E-UTRAN measurements / Event A5 / RSRQ based measurements	X	X
8.3.1.26	Measurement configuration control and reporting / Intra E-UTRAN measurements / Event A5 (Inter-frequency measurements)	X	X
8.3.1.27	Measurement configuration control and reporting / Intra E-UTRAN measurements / Event A5 (Inter-frequency measurements) / RSRQ based measurements	X	X
8.3.2.1	Measurement configuration control and reporting / Inter-RAT measurements / Event B2 /	X	X

Test case	Description	FDD	TDD
	Measurement of GERAN cells		
8.3.2.2	Measurement configuration control and reporting / Inter-RAT measurements / Periodic reporting / Measurement of GERAN cells	X	X
8.3.2.3	Measurement configuration control and reporting/Inter-RAT measurements/Event B2/Measurement of UTRAN cells	X	X
8.3.2.3a	Measurement configuration control and reporting / Inter-RAT measurements / Event B2 / Measurement of UTRAN cells / RSRQ based measurements	X	X
8.3.2.4	Measurement configuration control and reporting / Inter-RAT measurements / Periodic reporting / Measurement of UTRAN cells	X	X
8.3.2.5	Measurement configuration control and reporting / Inter-RAT measurements / Periodic reporting / Measurements of E-UTRAN, UTRAN and GERAN cells	X	X
8.3.2.6	Measurement configuration control and reporting / Inter-RAT measurements / Simultaneous A2 and two B2 / Measurements of E-UTRAN, UTRAN and GERAN cells	X	X
8.3.2.7	Measurement configuration control and reporting/Inter-RAT measurements/Event B2/Measurement of HRPD cells	X	-
8.3.2.8	Measurement configuration control and reporting / Inter-RAT measurements / Periodic reporting / Measurement of HRPD cells	X	-
8.3.2.9	Measurement configuration control and reporting / Inter-RAT measurements / Event B2 / Measurement of 1xRTT cells	X	-
8.3.2.10	Measurement configuration control and reporting / Inter-RAT measurements / Periodic reporting / Measurement of 1xRTT cells	X	-
8.3.2.11	Measurement configuration control and reporting / Inter-RAT Measurements / Event B1 / Measurement of UTRAN cells	X	X
8.3.3.1	Measurement configuration control and reporting/SON/ANR/CGI reporting of E-UTRAN cell	X	X
8.3.3.2	Measurement configuration control and reporting / SON / ANR / CGI reporting of UTRAN cell	X	
8.3.3.3	Measurement configuration control and reporting / SON / ANR / CGI reporting of GERAN cell	X	
8.3.3.4	Measurement configuration control and reporting / SON / ANR / CGI reporting of HRPD cell	X	-
8.4.1.2	Inter-RAT handover / From E-UTRA to UTRA PS / Data	X	X
8.4.1.4	Inter-RAT handover / From E-UTRA to UTRA HSPA / Data	X	X
8.4.1.5	Inter-RAT handover / from E-UTRA to UTRA HSUPA/HSDPA / Data	X	
8.4.2.2	Inter-RAT handover / From UTRA PS to E-UTRA / Data	X	X
8.4.2.4	Inter-RAT handover / From UTRA HSPA to E-UTRA / Data	X	X
8.4.3.2	Inter-RAT cell change order / From E-UTRA data RRC_CONNECTED to GPRS / Without NACC	X	X
8.4.3.3	Inter-RAT cell change order / From E-UTRA data to GPRS / With NACC	X	
8.4.7.3	Pre-registration at 1xRTT and inter-RAT handover / CS fallback from E-UTRA RRC_IDLE to 1xRTT	X	-
8.4.7.4	Pre-Registration at 1xRTT and inter-RAT handover / CS fallback caused by addition of CS service / From E-UTRA Data to 1xRTT	X	-
8.4.7.6	Pre-registration at 1xRTT and inter-RAT handover / Enhanced CS fallback from E-UTRA RRC_CONNECTED to 1xRTT / MO call	X	
8.4.7.7	Pre-registration at 1xRTT and inter-RAT handover / Enhanced CS fallback from E-UTRA RRC_CONNECTED to e1XCSFB ECAM-based 1xRTT / MO call	X	
8.4.7.9	Pre-registration at 1xRTT and inter-RAT Handover / Enhanced CS fallback from E-UTRA RRC_CONNECTED to 1xRTT / Extended Service Reject / MO call	X	-
8.5.1.1	Radio link failure/RRC connection re-establishment Success	X	X
8.5.1.2	Radio link failure/T301 expiry	X	X
8.5.1.3	Radio link failure/T311 expiry	X	X
8.5.1.4	Radio link failure / RRC connection re-establishment reject	X	X
8.5.1.5	Radio link failure/Radio link recovery while T310 is running	X	X
8.5.1.6	Radio link failure / T311 expiry / Dedicated RLF timer	X	X
8.5.1.7.1	CA / No Radio link failure on Scell/ RRC Connection Continues on PCell / Intra-band Contiguous CA	X	X
8.5.1.7.2	CA / No Radio link failure on Scell/ RRC Connection Continues on PCell / Inter-band CA	X	
8.5.2.1	Redirection to E-UTRAN / From UTRAN upon reception of RRC CONNECTION REJECT	X	X
8.5.4.1	UE capability transfer/Success	X	X

Test case	Description	FDD	TDD
8.6.2.1	Logged MDT / Intra-frequency measurement, logging and reporting	X	
8.6.2.2	Logged MDT / Inter-frequency measurement, logging and reporting	X	
8.6.2.4	Logged MDT / Logging and reporting / Indication of logged measurements at E-UTRA handover	X	
8.6.2.5	Logged MDT / Logging and reporting / Indication of logged measurements at E-UTRA re-establishment	X	
8.6.2.6	Logged MDT / Release of logged MDT measurement configuration / Expire of duration timer	X	
8.6.2.7	Logged MDT / Release of logged MDT measurement configuration / Reception of new logged measurement configuration, Detach or UE power off	X	
8.6.4.1	Radio Link Failure logging / Reporting of Intra-frequency measurements	X	
8.6.4.2	Radio Link Failure logging / Reporting of Inter-frequency measurements	X	
8.6.4.3	Radio Link Failure logging / Reporting at RRC connection establishment and reestablishment	X	
8.6.4.6	Radio Link Failure logging / Reporting of RLF report availability / PLMN change	X	
9.1.2.1	Authentication accepted	X	X
9.1.2.3	Authentication not accepted by the network, GUTI used, authentication reject and re-authentication	X	X
9.1.2.4	Authentication not accepted by the UE/MAC code failure	X	X
9.1.2.5	Authentication not accepted by the UE/SQN failure	X	X
9.1.2.6	Abnormal cases/Network failing the authentication check	X	X
9.1.3.1	NAS security mode command accepted by the UE	X	X
9.1.3.2	NAS security mode command not accepted by the UE	X	X
9.1.3.3	No emergency bearer service / NAS security mode command with EIA0 not accepted by the UE	X	X
9.1.4.2	Identification procedure/IMEI requested	X	X
9.1.5.1	EMM information procedure	X	X
9.2.1.1.1	Attach Procedure/Success/Valid GUTI	X	X
9.2.1.1.1a	Attach/Success/Last visited TAI, TAI list and equivalent PLMN list handling	X	X
9.2.1.1.1b	Attach Procedure / Success / Last visited TAI, TAI list and equivalent PLMN list handling / Single Frequency operation	X	X
9.2.1.1.2	Attach Procedure/Success/With IMSI/GUTI reallocation	X	X
9.2.1.1.7	Attach/Success/List of equivalent PLMNs in the ATTACH ACCEPT message	X	X
9.2.1.1.7a	Attach Procedure / Success / List of equivalent PLMNs in the ATTACH ACCEPT message / Single Frequency operation	X	X
9.2.1.1.9	Attach/Rejected/IMSI invalid	X	X
9.2.1.1.10	Attach/Rejected/Illegal ME	X	X
9.2.1.1.11	Attach / Rejected / EPS services and non-EPS services not allowed	X	X
9.2.1.1.12	Attach / Rejected / EPS services not allowed	X	X
9.2.1.1.13	Attach/Rejected/PLMN not allowed	X	X
9.2.1.1.13a	Attach / Rejected / PLMN not allowed / Single Frequency operation	X	X
9.2.1.1.14	Attach/Rejected/Tracking area not allowed	X	X
9.2.1.1.15	Attach/Rejected/Roaming not allowed in this tracking area	X	X
9.2.1.1.15a	Attach / Rejected / Roaming not allowed in this tracking area / Single Frequency operation	X	X
9.2.1.1.16	Attach/Rejected/EPS services not allowed in this PLMN	X	X
9.2.1.1.16a	Attach / Rejected / EPS services not allowed in this PLMN / Single Frequency operation	X	X
9.2.1.1.17	Attach/Rejected/No suitable cells in tracking area	X	X
9.2.1.1.18	Attach / Rejected / Not authorized for this CSG	X	X
9.2.1.1.19	Attach/Abnormal case/Failure due to non integrity protection	X	X
9.2.1.1.20	Attach/Abnormal case/Access barred because of access class barring or NAS signalling connection establishment rejected by the network	X	X
9.2.1.1.21	Attach/Abnormal case/Success after several attempts due to no network response	X	X
9.2.1.1.22	Attach/Abnormal case/Unsuccessful attach after 5 attempts	X	X
9.2.1.1.23	Attach/Abnormal case/Repeated rejects for network failures	X	X
9.2.1.1.24	Attach/Abnormal case/Change of cell into a new tracking area	X	X
9.2.1.1.25	Attach/Abnormal case/Mobile originated detach required	X	X
9.2.1.1.26	Attach/Abnormal case/Detach procedure collision	X	X
9.2.1.2.1	Combined attach/Success/EPS and non-EPS services	X	X
9.2.1.2.1b	Combined attach / Success / SMS only	X	X
9.2.1.2.1c	Combined attach procedure / Success / CS Fallback not preferred	X	X
9.2.1.2.1d	Combined attach procedure / Success / EPS and CS Fallback not preferred / data centric UE	X	X
9.2.1.2.2	Combined attach / Success / EPS services only / IMSI unknown in HSS	X	X
9.2.1.2.3	Combined attach / Success / EPS services only / MSC temporarily not reachable	X	X

Test case	Description	FDD	TDD
9.2.1.2.4	Combined attach/Success/EPS services only/CS domain not available	X	X
9.2.1.2.5	Combined attach / Rejected / IMSI invalid	X	X
9.2.1.2.6	Combined attach / Rejected / Illegal ME	X	X
9.2.1.2.7	Combined attach / Rejected / EPS services and non-EPS services not allowed	X	X
9.2.1.2.8	Combined attach / Rejected / EPS services not allowed	X	X
9.2.1.2.9	Combined attach / Rejected / PLMN not allowed	X	X
9.2.1.2.10	Combined attach / Rejected / Tracking area not allowed	X	X
9.2.1.2.11	Combined attach / Rejected / Roaming not allowed in this tracking area	X	X
9.2.1.2.12	Combined attach / Rejected / EPS services not allowed in this PLMN	X	X
9.2.1.2.13	Combined attach / Rejected / No suitable cells in tracking area	X	X
9.2.1.2.14	Combined attach / Rejected / Not authorized for this CSG	X	X
9.2.1.2.15	Combined attach / Abnormal case / Handling of the EPS attach attempt counter	X	X
9.2.2.1.1	UE initiated detach/UE switched off	X	X
9.2.2.1.2	UE initiated detach/USIM removed from the UE	X	X
9.2.2.1.3	UE initiated detach/EPS capability of the UE is disabled	X	X
9.2.2.1.4	UE initiated detach / detach for non-EPS services	X	X
9.2.2.1.6	UE initiated detach/Abnormal case/Local detach after 5 attempts due to no network response	X	X
9.2.2.1.7	UE initiated detach/Abnormal case/Detach procedure collision	X	X
9.2.2.1.8	UE initiated detach/Abnormal case/Detach and EMM common procedure collision	X	X
9.2.2.1.9	UE initiated detach/Abnormal case/Change of cell into a new tracking area	X	X
9.2.2.1.10	UE initiated detach / Mapped security context	X	X
9.2.2.2.1	NW initiated detach/Re-attach required	X	X
9.2.2.2.2	NW initiated detach/IMSI detach	X	X
9.2.2.2.14	NW initiated detach/Abnormal case/EMM cause not included	X	X
9.2.3.1.1	Normal tracking area update/Accepted	X	X
9.2.3.1.4	Normal tracking area update/List of equivalent PLMNs in the TRACKING AREA UPDATE ACCEPT message	X	X
9.2.3.1.5	Periodic tracking area update/Accepted	X	X
9.2.3.1.6	Normal tracking area update / UE with ISR active moves to E-UTRAN	X	X
9.2.3.1.8	UE receives an indication that the RRC connection was released with cause “load balancing TAU required”	X	X
9.2.3.1.9	Normal tracking area update / Correct handling of CSG list	X	X
9.2.3.1.9a	Normal tracking area update/NAS signalling connection recovery	X	X
9.2.3.1.10	Normal tracking area update / Rejected / IMSI invalid	X	X
9.2.3.1.11	Normal tracking area update / Rejected / Illegal ME	X	X
9.2.3.1.12	Normal tracking area update / Rejected / EPS service not allowed	X	X
9.2.3.1.13	Normal tracking area update/Rejected/UE identity cannot be derived by the network	X	X
9.2.3.1.14	Normal tracking area update/Rejected/UE implicitly detached	X	X
9.2.3.1.15	Normal tracking area update / Rejected / PLMN not allowed	X	X
9.2.3.1.15a	Normal tracking area update / Rejected / PLMN not allowed / Single Frequency operation	X	
9.2.3.1.16	Normal tracking area update/Rejected/Tracking area not allowed	X	X
9.2.3.1.17	Normal tracking area update / Rejected / Roaming not allowed in this tracking area	X	X
9.2.3.1.18	Normal tracking area update / Rejected / EPS services not allowed in this PLMN	X	X
9.2.3.1.18a	Normal tracking area update / Rejected / EPS services not allowed in this PLMN / Single Frequency operation	X	
9.2.3.1.19	Normal tracking area update/Rejected/No suitable cells in tracking area	X	X
9.2.3.1.20	Normal tracking area update / Rejected / Not authorized for this CSG	X	X
9.2.3.1.22	Normal tracking area update / Abnormal case / access barred due to access class control or NAS signalling connection establishment rejected by the network	X	X
9.2.3.1.23	Normal tracking area update/Abnormal case/Success after several attempts due to no network response/TA belongs to TAI list and status is UPDATED	X	X
9.2.3.1.25	Normal tracking area update/Abnormal case/Failure after 5 attempts due to no network response	X	X
9.2.3.1.26	Normal tracking area update/Abnormal case/TRACKING AREA UPDATE REJECT	X	X
9.2.3.1.27	Normal tracking area update/Abnormal case/Change of cell into a new tracking area	X	X
9.2.3.1.28	Normal tracking area update/Abnormal case/Tracking area updating and detach procedure collision	X	X
9.2.3.2.1	Combined tracking area update/Successful	X	X

Test case	Description	FDD	TDD
9.2.3.2.1a	Combined tracking area update / Successful / Check of last visited TAI and handling of TAI list, LAI and TMSI	X	X
9.2.3.2.1b	Combined tracking area update / Success / SMS only	X	X
9.2.3.2.1c	Combined tracking area update / Success / CS Fallback not preferred	X	X
9.2.3.2.2	Combined tracking area update / Successful for EPS services only / IMSI unknown in HSS	X	X
9.2.3.2.3	Combined tracking area update / Successful for EPS services only / MSC temporarily not reachable	X	X
9.2.3.2.4	Combined tracking area update / Successful for EPS services only / CS domain not available	X	X
9.2.3.2.5	Combined tracking area update / Rejected / IMSI invalid	X	X
9.2.3.2.6	Combined tracking area update / Rejected / Illegal ME	X	X
9.2.3.2.7	Combined tracking area update / Rejected / EPS services and non-EPS services not allowed	X	X
9.2.3.2.8	Combined tracking area update / Rejected / EPS services not allowed	X	X
9.2.3.2.9	Combined tracking area update / Rejected / UE identity cannot be derived by the network	X	X
9.2.3.2.10	Combined tracking area update / Rejected / UE implicitly detached	X	X
9.2.3.2.11	Combined tracking area update / Rejected / PLMN not allowed	X	X
9.2.3.2.12	Combined tracking area update / Rejected / Tracking area not allowed	X	X
9.2.3.2.13	Combined tracking area update / Rejected / Roaming not allowed in this tracking area	X	X
9.2.3.2.14	Combined tracking area update / Rejected / EPS services not allowed in this PLMN	X	X
9.2.3.2.15	Combined tracking area update / Rejected / No suitable cells in tracking area	X	X
9.2.3.2.16	Combined tracking area update / Rejected / Not authorized for this CSG	X	X
9.2.3.2.17	Combined tracking area update / Abnormal case / handling of the EPS tracking area updating attempt counter	X	X
9.2.3.3.1	First Iu mode to S1 mode inter-system change after attach	X	X
9.2.3.3.2	Iu mode to S1 mode intersystem change / ISR is active / Expiry of T3312 in E-UTRAN or T3412 in UTRAN and further intersystem change	X	X
9.2.3.3.3	Iu mode to S1 mode intersystem change / Periodic TAU and RAU / ISR activated, T34xx expired	X	X
9.2.3.3.4	First S1 mode to Iu mode inter-system change after attach	X	X
9.2.3.3.5	Periodic routing area update	X	X
9.2.3.3.5a	Periodic location update	X	X
9.2.3.3.6	E-UTRAN RRC connection failure / Reselection of UTRAN cell / NAS signalling to release old S1 interface connection	X	X
9.2.3.4.1	TAU/RAU procedure for inter-system cell reselection between A/Gb and S1 modes	X	X
9.3.1.1	Service request initiated by UE for user data	X	X
9.3.1.3	Service request / Mobile originating CS fallback	X	X
9.3.1.4	Service request / Rejected / IMSI invalid	X	X
9.3.1.5	Service request / Rejected / Illegal ME	X	X
9.3.1.6	Service request / Rejected / EPS services not allowed	X	X
9.3.1.7	Service request/Rejected/UE identity cannot be derived by the network	X	X
9.3.1.7a	Service request/Rejected/UE implicitly detached	X	X
9.3.1.12a	Extended service request / Rejected / CS domain temporarily not available	X	X
9.3.1.16	Service request/Abnormal case/Switch off	X	X
9.3.1.17	Service request/Abnormal case/Procedure collision	X	X
9.3.1.18	Service request / Rejected / Not authorized for this CSG	X	X
9.3.2.1	Paging procedure	X	X
9.3.2.2	Paging for CS fallback/Idle mode	X	X
9.3.2.2a	Paging for CS fallback/Connected mode	X	X
9.4.1	Integrity protection/Correct functionality of EPS NAS integrity algorithm/SNOW3G	X	X
9.4.2	Integrity protection/Correct functionality of EPS NAS integrity algorithm/AES	X	X
9.4.3	Ciphering and deciphering/Correct functionality of EPS NAS encryption algorithm/SNOW3G	X	X
9.4.4	Ciphering and deciphering/Correct functionality of EPS NAS encryption algorithm/AES	X	X
9.4.5	Integrity protection / Correct functionality of EPS NAS integrity algorithm / ZUC	X	X
9.4.6	Ciphering and deciphering / Correct functionality of EPS NAS encryption algorithm / ZUC	X	X
10.2.1	Dedicated EPS bearer context activation/Success	X	X
10.3.1	EPS bearer context modification/Success	X	X
10.4.1	EPS bearer context deactivation/Success	X	X
10.5.1	UE requested PDN connectivity procedure accepted by the network	X	X
10.5.3	UE requested PDN connectivity procedure not accepted	X	X
10.6.1	UE requested PDN disconnect procedure accepted by the network	X	X
10.7.1	UE requested bearer resource allocation, accepted by the network/New EPS bearer context	X	X
10.7.2	UE requested bearer resource allocation accepted by the network/Existing EPS bearer	X	X

Test case	Description	FDD	TDD
	context		
10.7.3	UE requested bearer resource allocation not accepted by the network	X	X
10.7.4	UE requested bearer resource allocation/Expiry of timer T3480	X	X
10.7.5	UE requested bearer resource allocation / BEARER RESOURCE ALLOCATION REJECT message including cause #43 “unknown EPS bearer context”	X	X
10.8.1	UE requested bearer resource modification accepted by the network/New EPS bearer context	X	X
10.8.2	UE requested bearer resource modification accepted by the network/Existing EPS bearer context	X	X
10.8.3	UE requested bearer resource modification not accepted by the network	X	X
10.8.4	UE requested bearer resource modification / Cause #36 “regular deactivation”	X	X
10.8.5	UE requested bearer resource modification / BEARER RESOURCE MODIFICATION REJECT message including cause #43 “unknown EPS bearer context”	X	X
10.8.6	UE requested bearer resource modification / Collision of a UE requested bearer resource modification procedure and EPS bearer context deactivation procedure	X	X
10.8.7	UE requested bearer resource modification / Expiry of timer T3481	X	X
10.9.1	UE routing of uplinks packets	X	X
11.1.1	MT-SMS over SGs/Idle mode	X	X
11.1.2	MT-SMS over SGs/Active mode	X	X
11.1.3	MO-SMS over SGs/Idle mode	X	X
11.1.4	MO-SMS over SGs/Active mode	X	X
11.1.5	Multiple MO-SMS over SGs / Idle mode	X	X
11.1.6	Multiple MO-SMS over SGs / Active mode	X	X
11.2.1	Emergency bearer services / Normal cell / NORMAL-SERVICE / Local Emergency Numbers List sent in the Attach / PDN connect new emergency EPS bearer context / Service request / Emergency PDN disconnect	X	X
12.2.1	Data transfer of E-UTRA radio bearer combinations 1, 3, 6 and 9	X	X
12.2.2	Data transfer of E-UTRA radio bearer combinations 2, 4, 7 and 10	X	X
12.2.3	Data transfer of E-UTRA radio bearer combinations 5, 6, 8, 11 and 12	X	X
12.2.4	Data transfer of E-UTRA radio bearer combination 13	X	X
12.3.1	Data transfer of E-UTRA radio bearer combinations 1, 3, 6 and 9 / MIMO	X	X
12.3.2	Data transfer of E-UTRA radio bearer combinations 2, 4, 7 and 10 / MIMO	X	X
12.3.3	Data transfer of E-UTRA radio bearer combinations 5, 6, 8, 11 and 12 / MIMO	X	X
12.3.4	Data transfer of E-UTRA radio bearer combination 13 / MIMO	X	X
13.1.1	Activation and deactivation of additional data radio bearer in E-UTRA	X	X
13.1.2	Call setup from E-UTRAN RRC_IDLE / CS fallback to UTRAN with redirection / MO call	X	
13.1.2a	Call setup from E-UTRAN RRC_IDLE / CS fallback to UTRAN with redirection including System Information / MO call	X	X
13.1.3	Call setup from E-UTRAN RRC_CONNECTED / CS fallback to UTRAN with redirection / MT call	X	X
13.1.4	Call setup from E-UTRAN RRC_IDLE / CS fallback to UTRAN with handover / MT call	X	X
13.1.5	Call setup from E-UTRAN RRC_CONNECTED / CS fallback to UTRAN with handover / MO call	X	X
13.1.7	Call setup from E-UTRA RRC_IDLE / CS fallback to GSM with redirection / MT call	X	X
13.1.8	Call setup from E-UTRA RRC_CONNECTED / CS fallback to GSM with redirection / MO call	X	X
13.1.9	Call setup from E-UTRA RRC_IDLE / CS fallback to GSM with CCO without NACC / MO call	X	X
13.1.10	Call setup from E-UTRA RRC_CONNECTED / CS fallback to GSM with CCO without NACC / MT call	X	X
13.1.15	Call setup from E-UTRAN RRC_IDLE / CS fallback to UTRAN with redirection / MT call / UTRAN cell is barred	X	X
13.1.16	Emergency call setup from E-UTRAN RRC_IDLE / CS fallback to UTRAN with handover	X	X
13.1.17	Call setup from E-UTRAN RRC_IDLE / mobile originating 1xCS fallback emergency call to 1xRTT	X	-
13.2.1	RRC connection reconfiguration/E-UTRA to E-UTRA	X	X
13.3.1.1	Intra-system connection re-establishment/Radio link recovery while T310 is running	X	X
13.3.1.2	Intra-system connection re-establishment/Re-establishment of a new connection when further data is to be transferred	X	X
13.3.1.3	RRC connection reconfiguration / Full configuration / DRB establishment	X	X
13.3.2.1	Inter-system connection re-establishment / E-UTRAN to UTRAN / Further data are to be transferred	X	X
13.3.2.2	Inter-system connection re-establishment / E-UTRAN to GPRS / Further data are to be transferred	X	X

Test case	Description	FDD	TDD
13.4.1.2	Inter-frequency mobility/E-UTRA to E-UTRA packet	X	X
13.4.1.3	Intra-system mobility / E-UTRA FDD to E-UTRA TDD to E-UTRA FDD packet	X	X
13.4.1.4	Inter-band mobility / E-UTRA to E-UTRA packet	X	X
13.4.1.5	RRC connection reconfiguration / Handover / Full configuration / DRB establishment	X	X
13.4.2.1	Inter-system mobility / E-UTRA to UTRA packet	X	X
13.4.2.4	Inter-system mobility / Service based redirection from UTRA to E-UTRA	X	X
13.4.2.5	Inter-system mobility / Service based redirection from GSM/GPRS to E-UTRA	X	
13.4.3.1	Inter-system mobility / E-UTRA voice to UTRA CS voice / SRVCC	X	
13.4.4.1	Pre-registration at 1xRTT and Cell reselection / 1x Zone Registration	X	-
13.4.4.5	Pre-Registration at 1xRTT / Power Down Registration	X	-
14.1	ETWS reception in RRC_IDLE state / Duplicate detection	X	
14.2	ETWS reception in RRC_CONNECTED state / Duplicate detection	X	
18.1.1	PWS reception in RRC_IDLE state / Duplicate detection	X	-
18.1.2	PWS reception in RRC_CONNECTED state / Duplicate detection	X	-
18.1.3	PWS reception in RRC_CONNECTED State/Power On	X	-

The Test Suite in TTCN3 is contained in multiple ASCII files which accompany the present document.

Annex B (informative): Style Guides

B.1 Introduction

This annex is based on the style guide given in TS 34.123-3 [7], annex E but the language for UE conformance tests is TTCN-3.

B.2 General Requirements for TTCN-3 Implementations

The TTCN-3 implementation for UE conformance tests shall be based on the following general design considerations:

- Even though it is not reflected in TTCN-3 anymore in UE conformance tests ASPs and PDUs will still be distinguished. This has impact on type definitions and naming conventions.
- In general, templates for UE conformance tests shall be separated for sending and receiving.
- Modified templates shall not be modified again.
- All local variables shall be declared at the beginning of a function;
  the order of declarations is:
  - local constants
  - local variables
  - local timers
- The purpose of the test case implementation is conformance testing.
- The common RAN5 approval process needs to be considered.

The TTCN-3 implementation for UE conformance tests shall fulfil the following requirements.

The implementation shall:

- follow ES 201 873-1 [13] (TTCN-3 Core Language) and ES 201 873-4 [27] (TTCN-3 Operational Semantics);
- be independent from interface specifications like TRI (ES 201 873-5 [28]) and TCI (ES 201 873-6 [29]) as well as from proprietary approaches;
- not use or rely on tool dependent features;
- support maintainability and extendibility;
- follow the naming conventions as defined below.

Further requirements:

- Usage of external functions should be avoided.
- Type definitions:
  - Existing ASN.1 type definitions contained in protocol specifications are imported from the respective standards. All other type definitions shall be done within TTCN-3.

B.3 Naming Conventions

Even though these are being used for TTCN-3 the naming conventions provided in the present document are mainly backward compatible to TTCN-2 as defined in TS 34.123-3 [7].

B.3.1 Prefixes and Restrictions for TTCN-3 Objects

Table B.3.1: Prefixes used for TTCN-3 objects

TTCN object	Initial Letter	Prefix/ Postfix	Comment
TTCN module	upper case	(none)	
TTCN group	upper case	(none)	
function parameter	upper case	p_	
function running on a component	upper case	f_	
local function (tree) not to be used by other modules	upper case	fl_	local function not to be used by other modules
external function	upper case	fx_	
altstep	upper case	a_	(including defaults)
test case selection expression			name as specified in TS 36.523-2 [2] shall be used
global constant	upper case	tsc_	(see note 1)
local constant	upper case	const_	local constant being defined in a function
Enumerated		(none)	there are no restrictions regarding enumerated types
type definition	upper case	_Type	(see note 7)
local variable	upper case	v_	(see note 6)
global (component) variable	upper case	vc_	(see note 2)
port type	upper case		
port name	upper case		
local timer	upper case	t_	
ASP template	upper case	cas_ cads_ car_ cadr_	send ASP modified (derived) send ASP receive ASP modified (derived) receive ASP
PDU template	upper case	cs_ cds_ cr_ cdr_	send PDU modified (derived) send PDU receive PDU modified (derived) receive PDU (see note 3)
CM template	upper case	cms_ cmr_	send coordination message receive coordination message
Template (neither ASP nor PDU nor CM)	upper case	cs_ cds_ cr_ cdr_ crs_	send template modified (derived) send template receive template modified (derived) receive template templates for IEs used in both directions (see note 5)
test suite parameter (PICS)	upper case	pc_	
test suite parameter (PIXIT)	upper case	px_	
test case		TC_	(see note 4)

NOTE 1: Global constants may be defined differently in imported modules (e.g. without any prefix and with lower case initial letter).

NOTE 2: Global variables or timers are those defined within the TTCN-3 components. They are visible to all the functions run in the component.

NOTE 3: Base template may have a second prefix:
- 508: PDU as defined in TS 36.508 [3];
- 108: PDU as defined in TS 34.108 [8].

NOTE 4: Test case names will correspond to the clause in the prose that specifies the test purpose. E.g. TC_8_1.

NOTE 5: Applicable only in case of "quasi-constant" definitions, e.g. to define a (constant) random pattern to be used for sending and receiving when the UE is configured in loopback mode.

NOTE 6: Counter variables do not need to have a prefix.

NOTE 7: Exceptions for type definitions:
- ASP names are fully upper case letters and typically have postfix "_REQ", "_CNF" or "_IND".
- RRC protocol type definitions are extracted and imported from TS 36.331 [19]/TS 25.331 [36] and are therefore out of scope.
- NAS protocol type definitions follow the names provided in the tabular notion of the standards and therefore do not have a "_Type" postfix.

B.3.2 Void

B.3.3 Void

B.3.4 Identifiers consisting of more than one Name

When identifiers are a concatenation of several words the words shall start with capital letters:

e.g.:. "px" + "Cell" + "A" + "Cell" + "Id" -> px_CellACellId.

Further details are described in TS 34.123-3 [7], clause E.2.1.

B.4 Implementation Issues

B.4.1 Control part

Even though the control part may not be used in a test campaign but be overruled by the test management system it is used to provide the following information:

- All test cases contained in the test suite.
- For each test case:
    - Test case selection expression.

For maintenance reasons it shall be possible to generate the control part automatically by an appropriate tool.

B.4.2 Top Level Test Case Definitions

The top level test case definitions run on the MTC exclusively. The tasks of these test case definitions are generally the same for each test case:

- Start guard timer.
- Create PTCs.
- Connect PTCs.
- Start PTCs.

- Wait for PTCs having finished.

Additionally the MTC may host the upper tester but this is left open to implementation.

For maintenance reasons it shall be possible to generate the top level test case definitions defined for the MTC automatically by an appropriate tool. To achieve this, the name of a function to be started on particular PTC need derived from the test case name:

e.g. the function for PTC_A in test case TC_XX_YY_ZZ shall be f_TC_XX_YY_ZZ_A.

Cells are created in an off-state in the preambles of the corresponding PTCs while UE is in the switched off-state.

B.4.3 Inter Component Communication

Communication between PTCs or PTCs and the MTC can be done by messages or by build-in mechanisms as *done* and *kill*. For maintenance reasons and extendibility the inter component communication shall be encapsulated by TTCN-3 implementation.

B.4.4 Encoding Information

For UE conformance tests several encoding rules need to be applied by the TTCN-3 codec. Even though the codec is out of scope of the present document there are aspects with impact on TTCN-3 implementation depending on different type definitions.

Table B.4.4-1

Type definitions	Encoding
ASN.1 types used for RRC signalling	ASN.1 PER
ASN.1 types used by NAS protocols	ASN.1 BER
NAS types	Tabular notated (see note)
SMS Types	Tabular notated (see note)
DRB types	Tabular notated (see note)
DHCPv4 types	Tabular notated (see note)
ICMPv6 types	Tabular notated (see note)
GERAN types	Tabular notated (see note)
GPRS Padding	see TS 34.123-3 [7], clause 6.10.2.9.1
GSM Spare Padding	see TS 34.123-3 [7], clause 6.10.2.9.2
LowHigh Rule	see TS 34.123-3 [7], clause 6.10.2.9.3
SACCHSysInfo Spare Padding	see TS 34.123-3 [7], clause 6.10.2.9.5
TTCN-3 types not used at the air interface: - Configuration of system simulator - Coordination between components - Types used internally in TTCN-3	(no specific encoding required)
NOTE: Tabular notated is performed by concatenation of all the present fields in the TTCN-3 template.	

Encoding information may be provided and supported in TTCN-3 by grouping of type definitions and using the *encode* attribute.

B.4.5 Verdict Assignment

In general the following rules shall be applied.

Table B.4.5-1: Rules for verdict assignment

Verdict	Rule
Pass	shall be assigned for each step defined in the prose of the test case
Fail	shall be assigned when there is a non-conformant signalling by the UE within the test body
Inconc	shall be assigned outside the test body and when it is not unequivocal whether a misbehaviour is caused by non-conformity of the UE signalling
Error	In case of obvious programming or parameterisation errors (e.g. missing *case* in a *select* statement)

B.4.5.1 PASS verdict assignment

The PASS verdicts are assigned by test cases or test case specific functions.

For generic test procedures as specified in 36.508 cl. 6.4.2, the preliminary pass is assigned directly after the procedure if all described in the procedure UL messages have been successfully received; this allows re-usage of these procedures for other purposes.

B.4.5.2 FAIL or INCONC verdict assignment

The verdict FAIL or INCONC can be assigned in test cases, in the test case-specific function, in the common functions and in the default behaviour.

Test case or test case-specific function:

In normal cases the common function f_EUTRA_SetVerdictFailOrInconc shall be used to assign FAIL or INCONC depending on whether it is in the test body or outside of the body.

An exception is made in the UE capability test cases: TC 8.4.5.1 in 3GPP TS 36.523-1 [1] and TC 8.1.5.7 in 3GPP TS 34.123-1 [2]: the function f_SetVerdict is used in the test body to assign a FAIL verdict without stopping the execution of the test case.

If in test cases a verdict FAIL shall be assigned for watchdog timer timeouts this needs to be done explicitly.

Common Functions:

The majority of the common functions have no verdict assignment. If a verdicts assignment is required in some common functions, the common function f_EUTRA_SetVerdictFailOrInconc shall be used to assign FAIL or INCONC.

As an exception in the altstep a_EUTRA_RacingCond_AwaitRrcMessage an INCONC is assigned when the RRC message and the L1/MAC indication are in the wrong order.

B.4.5.3 Verdict assignment in default behaviour

The default behaviour handles all events not being handled in test cases or functions. Whether the verdict FAIL or INCONC to be assigned in the default behaviour it depends very much on the port where the event occurs.

Table B.4.5.3-1: Verdict assignment in default behaviour upon test ports

Test port	Message	Comment	Verdict
SYS	SYSTEM_CTRL_CNF	unexpected confirmation	INCONC
SYSIND	SYSTEM_IND: Error indication	unspecific error at SS	INCONC
	SYSTEM_IND: MAC indication	(see note 1)	FAIL in the test body INCONC outside the test body
	SYSTEM_IND: L1 indication	RachPreamble, SchedReq, UL_HARQ may be repeated by the UE in case of transmission errors (see note 1)	INCONC
SRB	SRB_COMMON_IND	Any unexpected L3 signalling (see note 3)	FAIL in the test body INCONC outside the test body
NASCTRL	NAS_CTRL_CNF	unexpected confirmation	INCONC
DRB	DRB_COMMON_IND	L2 and combined tests (see note 2)	FAIL in the test body INCONC outside the test body
		pure signalling tests (see note 2)	INCONC
UT	UT_COMMON_CNF	unexpected confirmation	INCONC
NOTE 1: L1/MAC indications need to be enabled by the test case therefore they occur only when being relevant for the test case. NOTE 2: L2 and combined tests can be distinguished from pure signalling tests by additional global information controlled by f_EUTRA_TestBody_Set. NOTE 3: Layer 3 signalling by definition covers NAS and RRC signalling i.e. in general unexpected RRC messages will cause a FAIL in the body of any NAS test case as well as unexpected NAS messages will cause a FAIL in the body of any RRC test case.			

Table B.4.5.3-2: Verdict assignment in default behaviour when time-out

Timeout	Comment	Verdict
any timer	unspecific timeout (see note)	INCONC
NOTE: Local timers of test cases or functions cannot be distinguished in the default behaviour.		

B.4.6 Default Behaviour

As experience from UMTS conformance tests there shall be one standard default behaviour for each component.

The following rules shall be applied:

- The standard default behaviour is activated during initialisation of the respective component.
  In normal cases a TTCN writer does not need to care about the default.
- In general there is only one default behaviour activated (i.e. the standard default behaviour).
- The standard default behaviour shall cover all ports and timers of the component.
- Whenever possible deviations from the standard default behaviour shall be implemented locally rather than by introducing a new default behaviour.

If for exceptional cases the standard default behaviour needs to be replaced by another default behaviour or another default behaviour needs to be activated on top, the TTCN writer is responsible:

- to avoid side effects;
- to restore the standard behaviour.

B.4.7 Templates for Sending and Receiving

Templates used for sending and receiving shall be separated in general:

- A template shall be either for sending or for receiving; this shall be reflected in the prefix of the identifier.
- Send templates shall use no receive templates and vice versa.
- All parameters of a send template shall be restricted to:
    - values;
    - template (value);
    - template (omit).
- Parameters of receive templates may allow wildcards. They can be:
    - values;
    - unrestricted template parameters;
    - template parameters restricted to be present.
- The only exception to the above rule is for "quasi-constant" definitions, as described in note 5 of table B.3.1. Otherwise, even when the same data is expected for sending and receiving templates, there shall be different templates and the following rule shall be applied.
- The receive template is assigned the send template e.g.:
    - template My_Type cr_Template := cs_Template
- This results in separate definitions for sending and receiving and improves maintainability.

NOTE 1: For maintenance reasons, a send template shall never be derived from a receive template; and also a receive template shall never be assigned to a send template.

NOTE 2: When a send template is assigned to a receive template, the formal parameters of the receive template must follow the rules of send templates (i.e. it shall only contain 'template (value)', 'template (omit)' or values only).

B.4.8 Logging

In general no explicit log statements shall be used. As an exception log may be used to report unexpected situations in TTCN-3 like fatal programming error.

B.4.8.1 Prose Step Numbers

Informative comments containing the prose steps defined in 36.523-1 should be implemented according to the following guidelines:

- They relate to the Expected Sequence steps in the prose
- They should not be placed in common functions
- They should only be placed in functions containing the test case body
- They should always start with //@siclog
- They should always finish with siclog@
- For single steps they should be in the form //@siclog "Step 1" siclog@
- For multiple steps (where several steps are completed in a common function), they should be in the form //@siclog "Steps 1 - 3" siclog@ - i.e. Steps, space, first number, space, dash, space, second number

- They should be placed as close as possible, but always BEFORE, the line send/receive/function call
- The step number should also be included in any pass/fail verdict specified in the test case body
- If the step is listed as Void (or a group of steps) in the expected sequence, include the word Void in the comment.

Therefore the format of the comment should be:

//@siclog "Step[s] X [- Y] [Void]" siclog@

B.4.9 Top level comments

No restriction is specified for the top level comments.

B.4.10 Mapping of DRBs

LTE DRBs are mapped in TTCN according to the following rules:

- DRB1 is exclusively reserved for the default DRB and hence is always AM
- additional DRBs (AM or UM) may be assigned from DRB2 onward in any order
- there shall be no reconfiguration of a DRB from AM to UM or vice versa (unless a test case explicitly requires this); this especially means that DRB1 is never reconfigured to UM
- in general at the SS all DRBs needed by a test case may be configured at the beginning of the test case.

B.5 Modularisation

Even though there are no specific rules how to apply modularisation in general some principles can be defined:

- Maintainability and extendibility:
    - Maintainability and extendibility are essential for definition of the modular structure.
- Granularity of modules:
    - Cyclic imports are forbidden in TTCN-3; this has impact on the extendibility:
        - The granularity of modules shall not be too small.
    - Too big modules are hard to handle and may cause increase of compilation time:
        - The granularity of modules shall not be too rough.

NOTE: These are only vague principles since there is no way to define what small or huge modules are.

- General module structure:
    - The following modularisation can be applied independent from the internal structure:
        - Type definitions: TTCN-3, ASN.1.
        - Component definitions.
        - Common Templates: component dependent, component independent.
        - Common behaviour: MTC, PTCs.
        - Test case specific templates.
        - Test case specific behaviour.

- Whether or how these module groups can further be sub-divided is implementation dependent and therefore out of scope of the present document.

Annex C (informative): Design Principles

C.1 ASP Design

All ASPs consist of a common part (defined as a TTCN-3 type) and a specific part.

All ASPs sent by the SS include timing information (SFN, subframe number) in the common part.

Only one ASP is defined per direction per port, but this ASP may contain a union of several sub-ASPs in the specific part.

In general a small number of common ASPs cover all functionality, although other ASPs may be introduced to simplify TTCN-3 implementation and improve readability. Recurrent SS changes, such as power level changes, security activation and MAC scheduling are handled in dedicated ASPs. In addition, special purpose ASPs are used to control special behaviour, for example in L2 tests.

Configuration ASPs re-use ASN.1 definitions defined in the core specs.

No encoding rules are specified for the configuration ASPs; how they are encoded is left up to the SS implementation.

Configuration ASPs are 'procedure-based', rather than 'protocol layer-based' and reflect the state transitions of the SS. The same ASPs are used for reconfiguration and for initial configuration. In the case of reconfiguration the semantics of omit is to keep the configuration as it is; therefore when an IE in a configuration may be left out this is done e.g. by setting the respective field to a special value "None".

Data ASPs for sending/receiving peer-to-peer PDUs and user data all have different ASPs for the different SAPs.

The common part includes (at least):

- Timing Info:
    - SFN.
    - Subframe number (optional).
    - Which timing to use will depend on the test procedure and ASP purpose.
- Control Info:
    - Confirmation Flag.

The RRC ASN.1 IEs used in the specific part of the configuration ASPs:

- are imported using the granularity at the channel structure level or below;
- allow the ASP to be organised according to SS requirements;
- have a name that relates to SS configuration.

The SS specific IEs used in the specific part of the configuration ASPs (i.e. those elements not imported from the RRC ASN.1):

- use a naming convention such that they are easily distinguishable from the RRC ASN.1 IEs;
- are defined in TTCN-3 (i.e. not in ASN.1).

C.2 SS State Model

Figure C.2 shows the basic SS state model. It is basic in the sense that internally the SS may have more states; however, (re)configuration actions (state transitions in the model) should cause the SS to transit between the states defined below.

The following assumptions have been made about this state model:

- It presents a model of states in scope of a single cell. Hence, all configuration activities shall be performed in scope of a single cell.
- It depicts only SS states and SS (re)configuration actions between these states:
  - It does not show events which may trigger state transitions, e.g. L3 messages or procedures - i.e. it is test case and L3 procedure agnostic.
  - It does not show any peer-to-peer (i.e. between SS and UE) messages.
- Triggers for state transitions are always SS configuration messages (ASPs) coming from the test suite:
  - L2 messages coming from the UE can only trigger internal SS sub-state transitions and semi-autonomous procedures.
- L1 and L2 procedures (e.g. random access procedure, scheduling, security activation steps) are semi-autonomously handled by the SS and after being pre-configured do not require interaction with the test case:
  - The majority of test cases do not need to worry about e.g. RA procedure and letting the SS handle it would greatly simplify test case definition and implementation.
  - There may be stringent time requirements in case of some procedures that can be hard to meet in a generic way in the test suite.
  - Semi-autonomous procedures should be flexibly configurable and should have a "manual" mode in which they are handled by the test suite in order to enable testing them. What is the desired level and way of control is FFS.

Most states are stationary states, i.e. the SS can stay in them for a long time or, after performing some procedures, returns to these states. However, there is one state (indicated by dashed lines) which is part of the AS security activation procedure and is transitional, i.e. the SS can only stay in it for a short time until a transition the next stationary state is triggered.

To make the diagram more readable, a separate state called *ANY_STATE* has been introduced, together with some transitions. It shows which transitions are allowed at any point of time in any state.

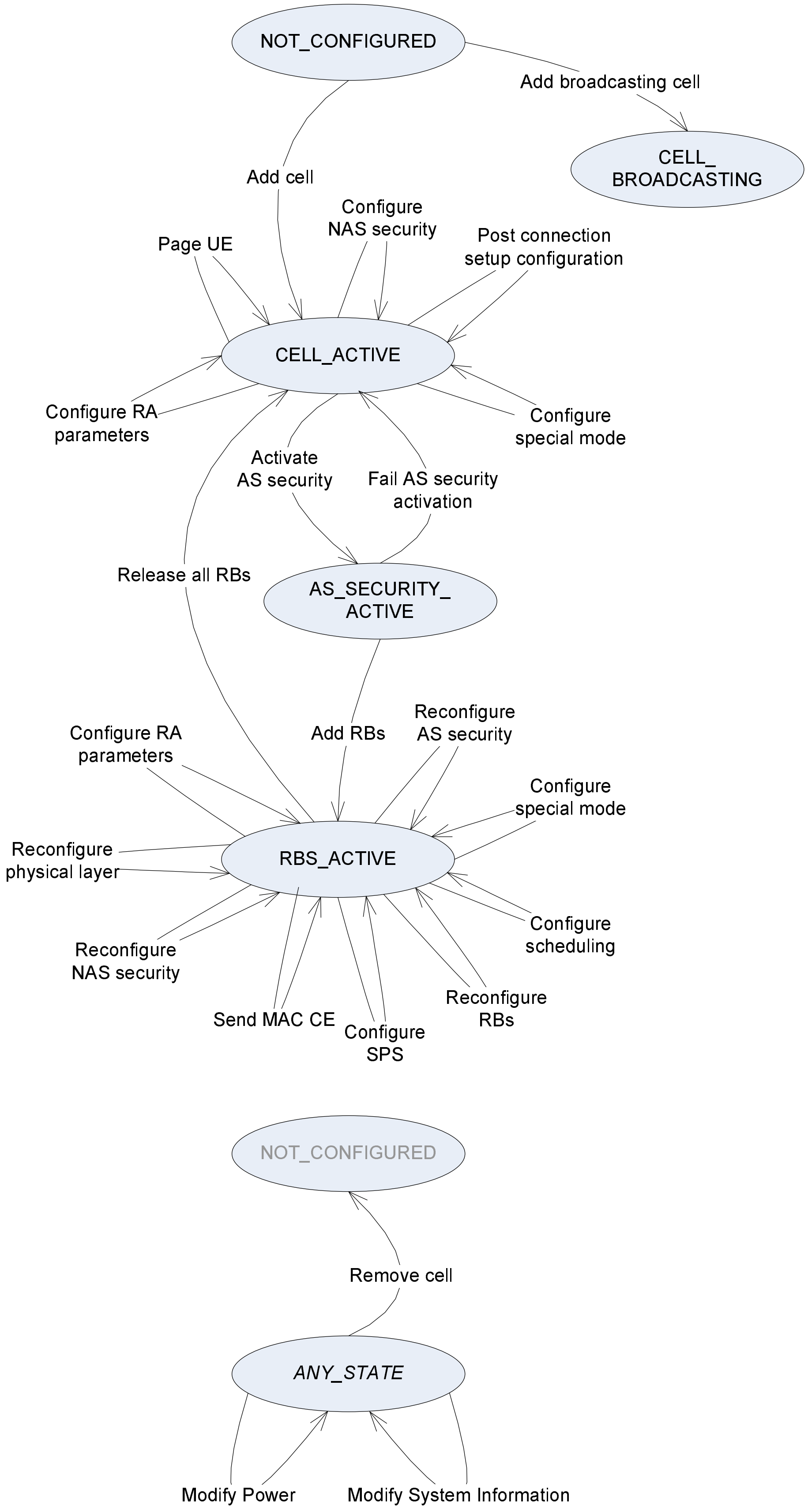
NOT_CONFIGURED
Add broadcasting cell
CELL_ BROADCASTING
Add cell
Configure NAS security
Page UE
Post connection setup configuration
CELL_ACTIVE
Configure RA parameters
Configure special mode
Activate AS security
Fail AS security activation
Release all RBs
AS_SECURITY_ ACTIVE
Configure RA parameters
Add RBs
Reconfigure AS security
Configure special mode
Reconfigure physical layer
RBS_ACTIVE
Configure scheduling
Reconfigure NAS security
Reconfigure RBs
Send MAC CE
Configure SPS
NOT_CONFIGURED
Remove cell
ANY_STATE
Modify Power
Modify System Information

Figure C.2-1: Basic SS state model

Description of states.

Table C.2-1: Description of states

State	Description
NOT_CONFIGURED	The cell does not exist (is not configured) in the SS
CELL_BROADCASTING	Physical DL channels and signals configured Initial cell configuration done: freq, BW, antennas, MIMO mode, power, etc. Transport and logical channels configured for SI broadcast Cell is broadcasting SI and downlink signals NOTE 1: This type of cell is needed only to serve as a neighbouring cell for measurement purposes, where full cell configuration does not need to be specified. There is no need to be able to promote a broadcasting cell to a full cell. NOTE 2: It is currently open whether a separate cell type with limited PRACH/RACH Rx capability is needed - this depends on whether a justified use case is defined for such a cell type.
CELL_ACTIVE	Cell configured to send and receive data from UE (fully functional) SRB0 defined (default configuration specified in TS 36.508 [3]) SRB1 defined (default configuration specified in TS 36.508 [3])
AS_SECURITY_ACTIVE	The SS has AS security (integrity protection and ciphering) active NOTE 3: The SS needs to autonomously take care of a temporary state in which integrity protection is applied to an outgoing SMC message, but ciphering is not.
RBS_ACTIVE	SRB2 and/or DRBs are configured for the UE (in addition to SRB0 and SRB1)
ANY_STATE	Represents any of the above states (except NOT_CONFIGURED)

Annex D (informative): TTCN-3 Definitions

D.1 EUTRA_ASP_TypeDefs

Type definitions for configuration of the system simulator;
Common design principles:
Semantics of OMIT: for all TTCN-3 type definitions used in ASPs omit means "keep as it is" =>
- on initial configuration in general all fields shall be provided
- no default values for fields are foreseen
- if necessary non-existence of information shall be explicitly configured
  (e.g. with a union of "no configuration" and "configuration parameters"
- fields within structures imported from the core spec are excepted from this rule

D.1.1 ASN1_Container

Definitions containing ASN.1 types for backward compatibility;
NOTE 1: PCCH_Message and BCCH_DL_SCH_Message already have a critical extension mechanism by RRC type definition
NOTE 2: BCCH_BCH_Message contains the MIB and therefore is considered to be not extendable
NOTE 3: "simple types" are not considered: C_RNTI, PhysCellId, CellIdentity, ARFCN_ValueEUTRA

AntennaInfoDedicated_R8andLater_Type

TTCN-3 Record Type			
Name	**AntennaInfoDedicated_R8andLater_Type**		
Comment			
antennaInfo	AntennaInfoDedicated		
antennaInfo_v920	AntennaInfoDedicated_v920	opt	

AntennaInfoDedicated_R10andLater_Type

TTCN-3 Record Type			
Name	**AntennaInfoDedicated_R10andLater_Type**		
Comment			
antennaInfo	AntennaInfoDedicated_r10		
antennaInfoUL	AntennaInfoUL_r10	opt	

CQI_ReportConfig_R8andLater_Type

TTCN-3 Record Type			
Name	**CQI_ReportConfig_R8andLater_Type**		
Comment			
cqi_ReportConfig	CQI_ReportConfig		
cqi_ReportConfig_v920	CQI_ReportConfig_v920	opt	

CQI_ReportConfig_R10andLater_Type

TTCN-3 Record Type			
Name	**CQI_ReportConfig_R10andLater_Type**		
Comment			
cqi_ReportConfig_r10	CQI_ReportConfig_r10		NOTE: field 'csi-SubframePatternConfig-r10' is not relevant as long as a cell is configured as SCell
cqi_ReportConfig_v1130	CQI_ReportConfig_v1130	opt	

PUCCH_ConfigDedicated_R8andLater_Type

TTCN-3 Record Type			
Name	**PUCCH_ConfigDedicated_R8andLater_Type**		
Comment			
pucch_ConfigDedicated	PUCCH_ConfigDedicated		
pucch_ConfigDedicated_v1020	PUCCH_ConfigDedicated_v1020	opt	
pucch_ConfigDedicated_v1130	PUCCH_ConfigDedicated_v1130	opt	

PUSCH_ConfigDedicated_R8andLater_Type

TTCN-3 Record Type			
Name	**PUSCH_ConfigDedicated_R8andLater_Type**		
Comment			
pusch_ConfigDedicated	PUSCH_ConfigDedicated		in case of CA beta offset shall be the same for the PCell and the associated SCells
pusch_ConfigDedicated_v1020	PUSCH_ConfigDedicated_v1020	opt	optionally present for Rel 10 cells (normal or CA); in case of CA beta offset shall be the same for the PCell and the associated SCells
pusch_ConfigDedicated_v1130	PUSCH_ConfigDedicated_v1130	opt	

UplinkPowerControlCommon_R8andLater_Type

TTCN-3 Record Type			
Name	**UplinkPowerControlCommon_R8andLater_Type**		
Comment			
uplinkPowerControlCommon	UplinkPowerControlCommon		
uplinkPowerControlCommon_v1020	UplinkPowerControlCommon_v1020	opt	optionally present for Rel 10 cells (normal or CA); NOTE: 'p0-NominalPUCCH', 'deltaFList-PUCCH', 'deltaPreambleMsg3' and 'UplinkPowerControlCommon-v1020' are not relevant as long as a cell is configured as SCell

UplinkPowerControlDedicated_R8andLater_Type

TTCN-3 Record Type			
Name	**UplinkPowerControlDedicated_R8andLater_Type**		
Comment			
uplinkPowerControlDedicated	UplinkPowerControlDedicated		
uplinkPowerControlDedicated_v1020	UplinkPowerControlDedicated_v1020	opt	optionally present for Rel 10 cells (normal or CA); NOTE: field 'p0-UE-PUCCH' is not relevant as long as a cell is configured as SCell
pathlossReferenceLinking	SCellPathlossReferenceLinking_Type	opt	NOTE: relevant only as long as a cell is configured as SCell
uplinkPowerControlDedicated_v1130	UplinkPowerControlDedicated_v1130	opt	

SoundingRS_UL_ConfigDedicated_R8andLater_Type

TTCN-3 Record Type			
Name	**SoundingRS_UL_ConfigDedicated_R8andLater_Type**		
Comment			
soundingRS_UL_ConfigDedicated	SoundingRS_UL_ConfigDedicated		
soundingRS_UL_ConfigDedicated_v1020	SoundingRS_UL_ConfigDedicated_v1020	opt	
soundingRS_UL_ConfigDedicatedAperiodic_r10	SoundingRS_UL_ConfigDedicatedAperiodic_r10	opt	

SchedulingRequestConfig_R8andLater_Type

TTCN-3 Record Type			
Name	**SchedulingRequestConfig_R8andLater_Type**		
Comment			
schedulingRequestConfig	SchedulingRequestConfig		
schedulingRequestConfig_v1020	SchedulingRequestConfig_v1020	opt	

TDD_Config_R8andLater

TTCN-3 Record Type			
Name	**TDD_Config_R8andLater**		
Comment			
R8	TDD_Config		
tdd_Config_v1130	TDD_Config_v1130	opt	

TDD_Config_Type

TTCN-3 Union Type		
Name	**TDD_Config_Type**	
Comment		
R8andLater	TDD_Config_R8andLater	

AntennaInfoCommon_Type

TTCN-3 Union Type		
Name	**AntennaInfoCommon_Type**	
Comment		
R8	AntennaInfoCommon	

AntennaInfoDedicated_Type

TTCN-3 Union Type		
Name	**AntennaInfoDedicated_Type**	
Comment	NOTE: acc. to Cond AI-r8/AI-r10 of PhysicalConfigDedicated 'antennaInfo'/'antennaInfo-v920' and 'antennaInfo-r10' are mutual exclusive	
R8andLater	AntennaInfoDedicated_R8andLater_Type	
R10andLater	AntennaInfoDedicated_R10andLater_Type	

PHICH_Config_Type

TTCN-3 Union Type		
Name	**PHICH_Config_Type**	
Comment		
R8	PHICH_Config	

PRACH_Config_Type

TTCN-3 Union Type		
Name	**PRACH_Config_Type**	
Comment		
R8	PRACH_Config	

PUCCH_ConfigCommon_Type

TTCN-3 Union Type		
Name	**PUCCH_ConfigCommon_Type**	
Comment		
R8	PUCCH_ConfigCommon	

PUCCH_ConfigDedicated_Type

TTCN-3 Union Type		
Name	**PUCCH_ConfigDedicated_Type**	
Comment		
R8andLater	PUCCH_ConfigDedicated_R8andLater_Type	

PUSCH_ConfigCommon_Type

TTCN-3 Union Type		
Name	**PUSCH_ConfigCommon_Type**	
Comment		
R8	PUSCH_ConfigCommon	

PUSCH_ConfigDedicated_Type

TTCN-3 Union Type		
Name	**PUSCH_ConfigDedicated_Type**	
Comment		
R8andLater	PUSCH_ConfigDedicated_R8andLater_Type	

SoundingRS_UL_ConfigCommon_Type

TTCN-3 Union Type		
Name	**SoundingRS_UL_ConfigCommon_Type**	
Comment		
R8	SoundingRS_UL_ConfigCommon	

SoundingRS_UL_ConfigDedicated_Type

TTCN-3 Union Type		
Name	**SoundingRS_UL_ConfigDedicated_Type**	
Comment		
R8andLater	SoundingRS_UL_ConfigDedicated_R8andLater_Type	

SchedulingRequestConfig_Type

TTCN-3 Union Type		
Name	**SchedulingRequestConfig_Type**	
Comment		
R8andLater	SchedulingRequestConfig_R8andLater_Type	

CQI_ReportConfig_Type

TTCN-3 Union Type		
Name	**CQI_ReportConfig_Type**	
Comment	NOTE: acc. to Cond CQI-r8/CQI-r10 of PhysicalConfigDedicated 'cqi-ReportConfig'/'cqi-ReportConfig-v920' and 'cqi-ReportConfig-r10' are mutual exclusive	
R8andLater	CQI_ReportConfig_R8andLater_Type	
R10andLater	CQI_ReportConfig_R10andLater_Type	

RACH_ConfigCommon_Type

TTCN-3 Union Type		
Name	**RACH_ConfigCommon_Type**	
Comment		
R8	RACH_ConfigCommon	

RACH_ConfigDedicated_Type

TTCN-3 Union Type		
Name	**RACH_ConfigDedicated_Type**	
Comment		
R8	RACH_ConfigDedicated	

MeasGapConfig_Type

TTCN-3 Union Type		
Name	**MeasGapConfig_Type**	
Comment		
R8	MeasGapConfig	

PDCP_Config_Type

TTCN-3 Union Type		
Name	**PDCP_Config_Type**	
Comment		
R8	PDCP_Config	

UL_AM_RLC_Type

TTCN-3 Union Type		
Name	**UL_AM_RLC_Type**	
Comment		
R8	UL_AM_RLC	

DL_AM_RLC_Type

TTCN-3 Union Type		
Name	**DL_AM_RLC_Type**	
Comment		
R8	DL_AM_RLC	

UL_UM_RLC_Type

TTCN-3 Union Type		
Name	**UL_UM_RLC_Type**	
Comment		
R8	UL_UM_RLC	

DL_UM_RLC_Type

TTCN-3 Union Type		
Name	**DL_UM_RLC_Type**	
Comment		
R8	DL_UM_RLC	

TTI_BundlingConfig_Type

TTCN-3 Union Type		
Name	**TTI_BundlingConfig_Type**	
Comment		
R8	boolean	

DRX_Config_Type

TTCN-3 Union Type		
Name	**DRX_Config_Type**	
Comment		
R8	DRX_Config	

SpsConfigurationDL_Type

TTCN-3 Union Type		
Name	**SpsConfigurationDL_Type**	
Comment		
R8	SPS_ConfigDL.setup	

SpsConfigurationUL_Type

TTCN-3 Union Type		
Name	**SpsConfigurationUL_Type**	
Comment		
R8	SPS_ConfigUL.setup	

UplinkPowerControlCommon_Type

TTCN-3 Union Type		
Name	**UplinkPowerControlCommon_Type**	
Comment		
R8andLater	UplinkPowerControlCommon_R8andLater_Type	

UplinkPowerControlDedicated_Type

TTCN-3 Union Type		
Name	**UplinkPowerControlDedicated_Type**	
Comment		
R8andLater	UplinkPowerControlDedicated_R8andLater_Type	

CSI_RS_Config_Type

TTCN-3 Record Type			
Name	**CSI_RS_Config_Type**		
Comment			
R10	CSI_RS_Config_r10		

D.1.2 System_Configuration

Formal ASP Definitions for system configuration

SystemRequest_Type

TTCN-3 Union Type		
Name	**SystemRequest_Type**	
Comment		
Cell	CellConfigRequest_Type	configure/release a cell
CellAttenuationList	CellAttenuationList_Type	power attenuation for one or several cells; all cells included in the list shall be changed at the same time; all cells in the list shall reach the new cell power within a maximum of 100ms (10 frames) acc. to the tolerances given in TS 36.508 NOTE: In the common ASP part the CellId shall be set - to the cell the timing information refers to if activation time shall be applied - to eutra_Cell_NonSpecific when there is no activation time
RadioBearerList	RadioBearerList_Type	configure/release one or several SRBs and/or DRBs NOTE: RBs are not configured in an SCell
EnquireTiming	Null_Type	get SFN and sub-frame number for this cell
AS_Security	AS_Security_Type	StartRestart/Release of AS security
Sps	SpsConfig_Type	to configure/activate or release semi-persistent scheduling
Paging	PagingTrigger_Type	to trigger SS to send paging at the given paging occasion (as calculated in TTCN)
L1MacIndCtrl	L1Mac_IndicationControl_Type	to configure SS to generate indications for L1/MAC events
RlcIndCtrl	Rlc_IndicationControl_Type	to configure SS to generate indications for RLC events
PdcpCount	PDCP_CountReq_Type	to set or enquire PDCP COUNT for one ore more RBs
PdcpHandoverControl	PDCP_HandoverControlReq_Type	to inform the target cell about the handover
L1_TestMode	L1_TestMode_Type	To Set L1/MAC in special Test modes e.g. DL CRC, PHICH etc
PdcchOrder	RA_PDCCH_Order_Type	to configure SS to transmit a PDCCH order with configured C-RNTI to the UE to trigger RA procedure; result in DCI Format 1A transmission as in TS 36.212, clause 5.3.3.1.3
ActivateScell	ActivateScell_Type	to configure SS to transmit a MAC control Element to activate an Scell
MbmsConfig	MBMS_Config_Type	Configuration of PMCH/MCCH/MTCH for eMBMS
PDCCH_MCCH_ChangeNotification	PDCCH_MCCH_ChangeNotification_Type	To trigger SS to send MCCH change notification at the given SFN/subframe (as calculated in TTCN)
MSI_Config	MSI_Config_Type	Configuration of MSI in MBMS normal mode to be included by the SS in the first subframe allocated to the MCH within the MCH scheduling period; uses MRB_ID option in routing info and logical channel ID is omitted

SystemConfirm_Type

TTCN-3 Union Type		
Name	**SystemConfirm_Type**	
Comment	confirmations for system configuration; in general to be sent after the configuration has been done	
Cell	Null_Type	(no further parameters from SS)
CellAttenuationList	Null_Type	(no further parameters from SS) NOTE 1: the confirmation shall be sent when all cells have changed power levels NOTE 2: for the CellId in the common ASP part the same rules are applied as for the SYSTEM REQ
RadioBearerList	Null_Type	(no further parameters from SS)
EnquireTiming	Null_Type	SFN and sub-frame number are included in the TimingInfo
AS_Security	Null_Type	(no further parameters from SS)
Sps	Null_Type	(no further parameters from SS)
Paging	Null_Type	normally not needed but defined for completeness
L1MacIndCtrl	Null_Type	(no further parameters from SS)
RlcIndCtrl	Null_Type	(no further parameters from SS)
PdcpCount	PDCP_CountCnf_Type	as response to 'Get' a list is returned containing COUNT information for the requested RBs
PdcpHandoverControl	Null_Type	confirmation for PDCP handover control
L1_TestMode	Null_Type	confirmation for L1 test mode
PdcchOrder	Null_Type	confirmation for PDCCH Order
ActivateScell	Null_Type	confirmation for ActivateScell
MbmsConfig	Null_Type	confirmation for MbmsConfig
PDCCH_MCCH_ChangeNotification	Null_Type	normally not needed but defined for completeness
MSI_Config	Null_Type	confirmation for explicit MSI Configuration

SystemIndication_Type

TTCN-3 Union Type		
Name	**SystemIndication_Type**	
Comment		
Error	charstring	indicates an error situation in SS; is not explicitly handled in TTCN but causes an INCONC due to default behaviour; an additional error code can be signalled in the common part of the ASP; SS shall raise an error in case of - Invalid TimingInfo for TDD - Contradiction of periodic UL grants and TDD configuration - Data scheduled for the same TTI does not fit into an available transport block (NOTE: additional cases may occur)
RachPreamble	RachPreamble_Type	RACH preamble being sent by the UE
SchedReq	Null_Type	indication for scheduling request sent by the UE
BSR	BSR_Type	to report the Buffer/Extended Buffer status report being received
UL_HARQ	HARQ_Type	to report the UL HARQ as received on PUCCH[TTI] for corresponding DL transmission in TTI-x, where x is normally 4
C_RNTI	C_RNTI	indicates C-RNTI being contained in a MAC PDU sent by the UE
PHR	PHR_Type	to report the Power headroom report received
HarqError	HarqError_Type	indicates detection of HARQ error: 1. HARQ CRC error for UL data 2. HARQ NACK from the UE unless SS is configured to report HARQ ACK/NACK
RlcDiscardInd	RlcDiscardInd_Type	indicates e.g. discarded PDUs
PeriodicRI	RI_Type	indicates periodic Rank Indicator (RI) reported by the UE on PUCCH or PUSCH; periodic CQI/PMI/RI Reporting is semi-statically configured at the UE by higher layers (see TS 36.213 clause 7.2.2); aperiodic reporting acc. to TS 36.213 clause 7.2.1 shall not be indicated NOTE: Acc. to TS 36.213 clause 7.2 aperiodic reporting has higher precedence than periodic reporting; => as working assumption the CQI request field in DCI format 0 is expected to be 0 for UL grants assigned by the SS i.e. aperiodic reporting acc. to TS 213 clause 7.2.1 does not happen
EPHR	MAC_CTRL_ExtPowerHeadRoom_Type	indicates Extended Power headroom report reported by the UE
CqiInd	Null_Type	indicates periodic CQI reported by the UE - NOTE: Report CQI value is currently not required

D.1.3 Cell_Configuration

Specific Info for Cell Configuration Primitive

D.1.3.1 Cell_Configuration_Common

EUTRA_ASP_TypeDefs: Constant Definitions

TTCN-3 Basic Types			
tsc_CellAttenuation_Off	Attenuation_Type	{Off:=true}	

Cell_Configuration_Common: Basic Type Definitions

TTCN-3 Basic Types		
EUTRA_FDD_Info_Type	Null_Type	no further parameters defined for FDD
CfiValue_Type	integer (1..3)	
AbsoluteCellPower_Type	integer (-145..0)	absolute cell power (dBm)
InitialAttenuation_Type	Attenuation_Type (tsc_CellAttenuation_Off)	Attenuation restricted to 'Off'
ToRS_EPRE_Ratio_Type	integer (-35..0)	any-resource-element to RS ratio in dB (e.g. PDSCH-to-RS ratio; see TS 36.213, clause 5.2)

CellConfigRequest_Type

TTCN-3 Union Type		
Name	**CellConfigRequest_Type**	
Comment		
AddOrReconfigure	CellConfigInfo_Type	for cell configuration: CellId : identifier of the cell to be configured RoutingInfo : None TimingInfo : Now (for initial configuration and for reconfiguration in general) ControlInfo : CnfFlag:=true; FollowOnFlag:=false (in general)
Release	Null_Type	to remove a cell completely - CellId : identifier of the cell to be released; eutra_Cell_NonSpecific, in case all cells shall be released RoutingInfo : None TimingInfo : Now ControlInfo : CnfFlag:=true; FollowOnFlag:=false (in general)

CellConfigInfo_Type

TTCN-3 Record Type			
Name	**CellConfigInfo_Type**		
Comment	common information for initial cell configuration or reconfiguration; in case of reconfiguration OMIT means 'keep configuration as it is'		
Basic	BasicCellConfig_Type	opt	basic information for a cell (e.g. broadcasting)
Active	ActiveCellConfig_Type	opt	add. configuration for active cell (i.e. cell being capable to receive RACH preamble)

CellConfigCapability_Type

TTCN-3 Enumerated Type	
Name	**CellConfigCapability_Type**
Comment	capabilities af a cell acc. to the initial condition of a test case
broadcastOnlyCell	no detection of RACH preables required; cell is only broadcasting
minimumUplinkCell	detection of RACH preables required but not any further RX capability
fullCell	full TX and RX capabilities

CA_CellInitialConfig_Type

TTCN-3 Enumerated Type	
Name	**CA_CellInitialConfig_Type**
Comment	
PCell	The cell when added as a CC in CA scenario for first time will be configured as an PCell
Scell_Active	The cell when added as a CC in CA scenario for first time will be configured as an SCell, and when configured as Scell, it may be activated, 36.508 clause 6.3.4
Scell_Inactive	The cell when added as a CC in CA scenario for first time will be configured as an SCell, and when configured as Scell, it will never be activated, 36.508 clause 6.3.4

BasicCellConfig_Type

TTCN-3 Record Type			
Name	**BasicCellConfig_Type**		
Comment			
ConfigCapability	CellConfigCapability_Type	opt	mandatory for the initial configuration; to be omitted afterwards
StaticCellInfo	StaticCellInfo_Type	opt	Common information which does not change during a test
PhysicalLayerConfigDL	PhysicalLayerConfigDL_Type	opt	default settings regarding physical control channels: PCFICH, PHICH, PDCCH
InitialCellPower	InitialCellPower_Type	opt	reference cell power for the RS of each antenna in DL NOTE 1: the power of the RS of an antenna may be reduced by antenna specific configuration NOTE 2: in general the power may be adjusted on a per resource element basis => all physical channel/signal power settings shall be ajusted relatively to the RS; if there are more than one TX antennas each one may have its own attenuation; independently from those relative power settings the cell power can easily be adjusted by just changing the reference power
BcchConfig	BcchConfig_Type	opt	configuration of BCCH/BCH; SS is triggered to configure RLC/MAC regardingly; BCCH data on the PDSCH is distiguished by the SI-RNTI PBCH: MIB; PDSCH: scheduling and resource allocation; SIBs
PcchConfig	PcchConfig_Type	opt	configuration of PCCH/PCH; SS is triggered to configure RLC/MAC regardingly; PCCH data on the PDSCH is distiguished by the P-RNTI (needed even to modify SI => shall be configured for CELL_BROADCASTING)
CA_CellInitialConfig	CA_CellInitialConfig_Type	opt	capability of a cell when added as a CC in CA scenario. 1. Provided at the initial configuration of a cell in CA test cases; to be omitted afterwards; 2. Always omit for a cell which remains normal non CA cell

ActiveCellConfig_Type

TTCN-3 Record Type			
Name	**ActiveCellConfig_Type**		
Comment			
C_RNTI	C_RNTI	opt	(pre-)configured C-RNTI; affects scrambling of PDSCH/PUSCH and CRC of PDCCH(s); shall be used implicitly in RACH procedure (i.e. as CE in RAR)
PhysicalLayerConfigUL	PhysicalLayerConfigUL_Type	opt	parameters for PRACH, PUCCH, PUSCH Omitted when no UL frequency is applied to the band
RachProcedureConfig	RachProcedureConfig_Type	opt	to configure the SS's behaviour for the RACH procedure Omitted when no UL frequency is applied to the band
CcchDcchDtchConfig	CcchDcchDtchConfig_Type	opt	Parameters related to CCCH/DCCH/DTCH in UL and DL
ServingCellConfig	ServingCellConfig_Type	opt	not present as long as the cell is 'normal' cell (i.e. does not act as a carrier component in CA); present to configure cell for CA (Pcell or SCell); in general at initial configuration 'ServingCellInfo' is omit; after sending/scheduling the RRCConnectionReconfiguration adding 1 or more cells for CA 'ServingCellInfo' is provided for the cell which gets Pcell and for the cell which gets SCell

StaticCellInfo_Type

TTCN-3 Record Type			
Name	**StaticCellInfo_Type**		
Comment	Common information which (normally) does not change during a test; therefore all fields are mandatory		
Common	CommonStaticCellInfo_Type		
Downlink	DownlinkStaticCellInfo_Type		
Uplink	UplinkStaticCellInfo_Type	opt	NOTE: for TDD UL and DL are using the same parameters Omitted when no UL frequency is applied to the band

CommonStaticCellInfo_Type

TTCN-3 Record Type			
Name	**CommonStaticCellInfo_Type**		
Comment	information common for UL and DL; all fields are mandatory		
RAT	EUTRA_RAT_Type		FDD or TDD; FDD/TDD specific parameters
PhysicalCellId	PhysCellId		N(cell, ID): imported from core spec; -> cell specific reference signals (non-MBSFN) -> scrambling of all DL physical channels: PBCH, PCFICH, PDCCH, PHICH and PDSCH (together with nRNTI)
eNB_CellId	CellIdentity	opt	Placeholder for Cell identity (28 bits): eNB (20bits) and cell identity (8bits). The use of that field is for future usage and omit for the time being
EutraBand	FreqBandIndicator		NOTE: in 3G there are overlapping bands therefore the band needs to be provided; in EUTRA it is provided as well to be extendable in the future
CellTimingInfo	CellTimingInfo_Type		

EUTRA_TDD_Info_Type

TTCN-3 Record Type			
Name	**EUTRA_TDD_Info_Type**		
Comment			
Configuration	TDD_Config_Type		TDD_Config acc. to RRC ASN.1 (acc. TS 36.331, clause 6.3.2)

EUTRA_HalfDuplexFDD_Info_Type

TTCN-3 Record Type	
Name	**EUTRA_HalfDuplexFDD_Info_Type**
Comment	NOTE: for the time being there is no test case or test configuration using half duplex FDD; (type definition is used as place holder only)

EUTRA_RAT_Type

TTCN-3 Union Type		
Name	**EUTRA_RAT_Type**	
Comment	specifies RAT type and frame structure (TS 36.211, clause 4)	
FDD	EUTRA_FDD_Info_Type	
TDD	EUTRA_TDD_Info_Type	
HalfDuplexFDD	EUTRA_HalfDuplexFDD_Info_Type	

CellTimingInfo_Type

TTCN-3 Record Type			
Name	**CellTimingInfo_Type**		
Comment	Cell Timing		
Tcell	integer (0..307199)		frame duration Tf = 307200 * Ts = 10ms; System Time Unit Ts = 1/(15000 * 2048)
SfnOffset	integer (0..1023)		(assuming 10 bit SFN)

DownlinkStaticCellInfo_Type

TTCN-3 Record Type			
Name	**DownlinkStaticCellInfo_Type**		
Comment	DL Static Info		
Earfcn	ARFCN_ValueEUTRA		DL-EARFCN as defined in TS 36.101
Bandwidth	Dl_Bandwidth_Type		N(DL, RB) = 6..110 (6, 15, 25, 50, 75, 100)
RBSize	EUTRA_RBSize_Type		may be skipped assuming normal sub-carrier spacing => N(RB, SC) = 12
CyclicPrefix	EUTRA_CyclicPrefix_Type		

UplinkStaticCellInfo_Type

TTCN-3 Record Type			
Name	**UplinkStaticCellInfo_Type**		
Comment	UL Static Info		
Earfcn	ARFCN_ValueEUTRA		UL-EARFCN as defined in TS 36.101
Bandwidth	Ul_Bandwidth_Type		N(DL, RB) = 6..110 (6, 15, 25, 50, 75, 100)
CyclicPrefix	EUTRA_CyclicPrefix_Type		

EUTRA_RBSize_Type

TTCN-3 Enumerated Type	
Name	**EUTRA_RBSize_Type**
Comment	Resource Block Size in freq domain; N(RB,SC) is 12 for normal sub-carrier spacing
n_RB_SC_12	
n_RB_SC_24	

EUTRA_CyclicPrefix_Type

TTCN-3 Enumerated Type	
Name	**EUTRA_CyclicPrefix_Type**
Comment	NOTE: in DL extended cyclic prefix depends on sub-carrier spacing
normal	
extended	

Modulation_Type

TTCN-3 Enumerated Type	
Name	**Modulation_Type**
Comment	'unused' e.g. for 2nd codeword when there is no spatial multiplexing
unused	
qpsk	
qam16	
qam64	

Attenuation_Type

TTCN-3 Union Type		
Name	**Attenuation_Type**	
Comment	attenuation of the reference power	
Value	integer (0..144)	cell power reference power reduced by the given attenuation (value is in dB)
Off	Null_Type	even though in TS 36.508 -145dBm is given for a non suitable cell we specify an explicit "Off" value here

ToRS_EPRE_Ratios_Type

TTCN-3 Record Type			
Name	**ToRS_EPRE_Ratios_Type**		
Comment	RA and RB ratios according to see TS 36.213, clause 5.2		
RA	ToRS_EPRE_Ratio_Type	opt	
RB	ToRS_EPRE_Ratio_Type	opt	

InitialCellPower_Type

TTCN-3 Record Type			
Name	**InitialCellPower_Type**		
Comment			
MaxReference Power	AbsoluteCellPower_Type		maximum value of cell reference power (RS EPRE in dBm/15kHz as per TS 36.508, clause 4.3.4.1); a cell is initialised with this reference power; its value is the upper bound of the cell power during the test case
Attenuation	InitialAttenuation_Type		initial attenuation

D.1.3.2 Downlink_Physical_Layer_Configuration

Downlink physical layer configuration:
- DL antenna configuration
- control region (PCFICH, PHICH, PDCCH)
- primary/secondary sync signals
- power control for physical channels and signals

D.1.3.2.1 Antenna_Configuration

Antenna_Configuration: Basic Type Definitions

TTCN-3 Basic Types		
AntennaPortId_Type	integer (0, 1, 2, 3, 4, 5, 6, 7, 8)	Antenna port 0..3: Cell specific reference signals Antenna port 4: MBSFN reference signals Antenna port 5: UE specific reference signals Antenna port 6: Positioning reference signals Antenna port 7: UE specific reference signals for dual layer beamforming Antenna port 8: UE specific reference signals for dual layer beamforming (Antenna ports in DL acc. to 36.211 cl. 6.2.1)

AntennaPortInfo_Type

TTCN-3 Record Type			
Name	**AntennaPortInfo_Type**		
Comment	NOTE: for conformance tests it may not be necessary to consider propagation pathes for different antennas; => fields of AntennaPortInfo_Type are used as place holders for future usage and are of 'Dummy_Type' for the time being		
PowerAttenuation	Dummy_Type		even though eNb shall send with the same power on all antennas at the UE there may be different signal strength => RS will have reduced power NOTE: the EPRE ratios (e.g. PDSCH-to-RS ratio) are assumed to be equal for all antennas
PropagationDelay	Dummy_Type		signal from different antennas may have different propagation delay

AntennaPortConfig_Type

TTCN-3 Union Type		
Name	**AntennaPortConfig_Type**	
Comment		
AddOrReconfigure	AntennaPortInfo_Type	add / re-configure antenna port
Release	Null_Type	release antenna port

AntennaPort_Type

TTCN-3 Record Type			
Name	**AntennaPort_Type**		
Comment			
Id	AntennaPortId_Type		
Config	AntennaPortConfig_Type		

DownlinkAntennaGroupConfig_Type

TTCN-3 Record Type			
Name	**DownlinkAntennaGroupConfig_Type**		
Comment			
AntennaInfoCommon	AntennaInfoCommon_Type		acc. to TS 36.331, clause 6.3.2; contains antennaPortsCount = an1, an2, an4; static parameter; will (normally) not be modified whilst a test; NOTE: information is redundant since number of antenna ports may implicitly be determined by the number of ports being configured
AntennaPort	record length (1..4) of AntennaPort_Type		1, 2 or 4 antennas; from the UE's point of view each antenna may have a different power level and a different propagation delay

D.1.3.2.2 Physical_Channels

PbchConfig_Type

TTCN-3 Record Type			
Name	**PbchConfig_Type**		
Comment			
RelativeTxPower	ToRS_EPRE_Ratios_Type	opt	power ratio for PBCH's resource elements relative to the RS

PcfichConfig_Type

TTCN-3 Record Type			
Name	**PcfichConfig_Type**		
Comment			
CfiValue	CfiValue_Type	opt	control format indicator signalled on PCFICH
RelativeTxPower	ToRS_EPRE_Ratios_Type	opt	power ratio for PFCICH's resource elements relative to the RS

PhichConfig_Type

TTCN-3 Record Type			
Name	**PhichConfig_Type**		
Comment			
PhichConfig	PHICH_Config_Type	opt	parameters acc. TS 36.331, clause 6.3.2: phich-Duration, phich-Resource; may have impact on Cfi
RelativeTxPower	ToRS_EPRE_Ratios_Type	opt	power ratio for PHICH's resource elements relative to the RS

CCE_StartIndex_DL_UL_Type

TTCN-3 Record Type			
Name	**CCE_StartIndex_DL_UL_Type**		
Comment	CCE_St_Ind' or CCE_St_Ind'' acc. to table 7.1.1-1 in TS 36.523-3		
CCE_StartIndex_DL	integer		
CCE_StartIndex_UL	integer		

CCE_StartIndexList_Type

TTCN-3 Record of Type	
Name	**CCE_StartIndexList_Type**
Comment	describes PDCCH candidates for all sub-frames
record length(10) of CCE_StartIndex_DL_UL_Type	

PdcchCandidate_Type

TTCN-3 Record Type			
Name	**PdcchCandidate_Type**		
Comment	CCE start indeces for a given RNTI value acc. to table 7.1.1-1 in TS 36.523-3		
RNTI	C_RNTI		RNTI value as per table 7.1.1-1
CCE_StartIndexList	CCE_StartIndexList_Type		CCE Start Indices corresponding to the RNTI

PdcchCandidateList_Type

TTCN-3 Record of Type	
Name	**PdcchCandidateList_Type**
Comment	list of RNTIs and their corresponding CCE Start Indices
record of PdcchCandidate_Type	

PdcchConfig_Type

TTCN-3 Record Type			
Name	**PdcchConfig_Type**		
Comment	UE performs blind detection for common and UE specific search spaces for different aggregation levels (PDCCH formats acc. TS 36.211, clause 6.8.1) content of the PDCCHs (DCI formats acc. TS 36.212, clause 5.3.3) shall be controlled together with scheduling and resource allocation		
CommonSearchSpaceFormat	integer (2, 3)	opt	PDCCH format for common search space; acc. to TS 36.213, clause 9.1.1 only aggregation level 4 and 8 are allowed (i.e. PDCCH format 2 and 3
UeSpecificSearchSpaceFormat	integer (0, 1, 2, 3)	opt	UE specific search space: corresponding aggregation levels 1, 2, 4, 8
PdcchCandidateList	PdcchCandidateList_Type	opt	PDCCH candidate list acc. to table 7.1.1-1 in TS 36.523-3
RelativeTxPower	ToRS_EPRE_Ratios_Type	opt	power ratio for PDCCH's resource elements relative to the RS

PdschRelativeTxPower_Type

TTCN-3 Record Type			
Name	**PdschRelativeTxPower_Type**		
Comment	NOTE 1: the power control for the PDSCH is assumed to be (semi-)static for signalling conformance tests acc. to TS 36.323; nevertheless for different channels and purposes with the PDSCH there may be different power settings; NOTE 2: acc. to TS 36.213, clause 5.2 the EPRE ratio is different in time domain for OFDM symbols containing or not containing reference signals; this needs to be considered by SS		
RachResponse	ToRS_EPRE_Ratios_Type	opt	
BcchOnPdsch	ToRS_EPRE_Ratios_Type	opt	
PcchOnPdsch	ToRS_EPRE_Ratios_Type	opt	
CcchOnPdsch	ToRS_EPRE_Ratios_Type	opt	
DcchDtchOnPdsch	ToRS_EPRE_Ratios_Type	opt	

PdschConfig_Type

TTCN-3 Record Type			
Name	**PdschConfig_Type**		
Comment			
RelativeTxPower	PdschRelativeTxPower_Type	opt	

D.1.3.2.3 Physical_Signals

PrimarySyncSignal_Type

TTCN-3 Record Type			
Name	**PrimarySyncSignal_Type**		
Comment			
RelativeTxPower	ToRS_EPRE_Ratios_Type	opt	power ratio for PSS's resource elements relative to the RS

SecondarySyncSignal_Type

TTCN-3 Record Type			
Name	**SecondarySyncSignal_Type**		
Comment			
RelativeTxPower	ToRS_EPRE_Ratios_Type	opt	power ratio for PSS's resource elements relative to the RS

SRS_UL_Config_Type

TTCN-3 Record Type			
Name	**SRS_UL_Config_Type**		
Comment			
Common	SoundingRS_UL_ConfigCommon_Type		
Dedicated	SoundingRS_UL_ConfigDedicated_Type		

PhysicalLayerConfigDL_Type

TTCN-3 Record Type			
Name	**PhysicalLayerConfigDL_Type**		
Comment	all fields are declared as optional to allow single reconfigurations; in this case omit means "keep as it is"		
AntennaGroup	DownlinkAntennaGroupConfig_Type	opt	
Pbch	PbchConfig_Type	opt	
Pcfich	PcfichConfig_Type	opt	
Phich	PhichConfig_Type	opt	
Pdcch	PdcchConfig_Type	opt	
Pdsch	PdschConfig_Type	opt	
Pss	PrimarySyncSignal_Type	opt	
Sss	SecondarySyncSignal_Type	opt	
CSI_RS_Config	CSI_RS_Config_Type	opt	Mandatory to be configured in CA PCell; in other cells if present SS shall ignore it but shall apply the configuration if the cell is promoted as PCell later on.
Pmch	PmchConfig_Type	opt	Same power offset for all PMCH carrying MCCH or MTCH

D.1.3.3 Uplink_Physical_Layer_Configuration

Uplink physical channel configuration: PRACH, PUCCH, PUSCH and UL RS

PUCCH_Configuration_Type

TTCN-3 Record Type			
Name	**PUCCH_Configuration_Type**		
Comment			
Common	PUCCH_ConfigCommon_Type	opt	
Dedicated	PUCCH_ConfigDedicated_Type	opt	

PUSCH_Configuration_Type

TTCN-3 Record Type			
Name	**PUSCH_Configuration_Type**		
Comment			
Common	PUSCH_ConfigCommon_Type	opt	
Dedicated	PUSCH_ConfigDedicated_Type	opt	

SS_TimingAdvanceConfig_Type

TTCN-3 Union Type		
Name	**SS_TimingAdvanceConfig_Type**	
Comment		
InitialValue	RACH_TimingAdvance_Type	initial value corresponding to what is sent to the UE in RACH response (range acc. 11 bit value; 0 in normal cases)
Relative	TimingAdvanceIndex_Type	timing advance command to adjust changes of timing advance acc. to TS 36.213, clause 4.2.3; (range acc. 6 bit value: -31..32)

PhysicalLayerConfigUL_Type

TTCN-3 Record Type			
Name	**PhysicalLayerConfigUL_Type**		
Comment	NOTE: For the time being there is no requirement to configure the SS with TPC-PDCCH-Config; In general SS is required to keep the UE's UL power constant		
Prach	PRACH_Config_Type	opt	parameters acc. TS 36.331, clause 6.3.2; in general depending on FDD/TDD (see TS 36.211, clause 5.7)
Pucch	PUCCH_Configuration_Type	opt	parameters acc. TS 36.331, clause 6.3.2
Pusch	PUSCH_Configuration_Type	opt	parameters acc. TS 36.331, clause 6.3.2 (including configuration of RS)
TimingAdvance	SS_TimingAdvanceConfig_Type	opt	to adjust timing advance; normally timing advance is configured as 0 at the beginning and never changed during the test case; in some MAC test cases timing advance may be configured to a non-zero (11 bit value) at the beginning and modified by (6 bit) timing advance commands during the test
SRS_UL_Config	SRS_UL_Config_Type	opt	sounding reference symbol (SRS); -> TS 36.213, clause 8.2, TS 36.211, clause 5.5.3
SR_Config	SchedulingRequestConfig_Type	opt	PUCCH resources for scheduling requests acc. to TS 36.213 table 10.15; as signalled to the UE acc. to TS 36.331, clause 6.3.2
CQI_ReportConfig	CQI_ReportConfig_Type	opt	
UplinkPowerControlCommon	UplinkPowerControlCommon_Type	opt	
UplinkPowerControlDedicated	UplinkPowerControlDedicated_Type	opt	

D.1.3.4 Common_MAC_Configuration

Transport channel and MAC related procedures and configuration

Common_MAC_Configuration: Basic Type Definitions

TTCN-3 Basic Types		
ImcsValue_Type	integer (0..31)	Modulation and coding scheme index coding
TimingAdvanceIndex_Type	integer (0..63)	acc. to TS 36.321, clause 6.1.3.5 "Timing Advance Command MAC Control Element" and TS 36.213, clause 4.2.3 "Transmission timing adjustments"
TimingAdvance_Period_Type	integer (400, 600, 1020, 1530, 2040, 4090, 8190)	the values correspond to 80 % of TimeAlignmentTimer (acc. to TS 36.523-3, clause 7.2) (TS 36.331, clause 6.3.2: sf500, sf750, sf1280, sf1920, sf2560, sf5120, sf10240) rounded to nearest multiple of 10

RedundancyVersionListDL_Type

TTCN-3 Record of Type	
Name	**RedundancyVersionListDL_Type**
Comment	NOTE: in general the list shall contain maxHARQ-Tx elements; if there are not enough elements specified SS shall raise an error; per default the list is configured to 0,2,3,1,0 (TS 36.321, clause 5.4.2.2)
record length (1..28) of RedundancyVersion_Type	

UL_TransRetransmission_Type

TTCN-3 Union Type		
Name	**UL_TransRetransmission_Type**	
Comment		
NewTransmission	Null_Type	new transmission of data with redundancy version RV=0 (acc. to TS 36.321 clause 5.4.2.2); NDI is toggled
ReTransmissionAdaptive	RedundancyVersion_Type	SS assigns grant to requests retransmission of data with given redundancy version; NDI is not toggled
ReTransmissionNonAdaptive	Null_Type	place holder for non-adaptive retransmissions; SS does not send any grant

UL_TransRetransmissionList_Type

TTCN-3 Record of Type	
Name	**UL_TransRetransmissionList_Type**
Comment	list of transmission and subsequent retransmissions: in UL retransmissions are synchronous (every 8 TTIs for FDD); independent from the HARQ_ModeList SS shall send grants for every adaptive retransmissions; in case of non-adaptive retransmissions SS simply does not sent a grant (i.e. ReTransmissionNonAdaptive elements are used to adjust timing of the adaptive restransmissions only)
record length (1..28) of UL_TransRetransmission_Type	

Imcs_Type

TTCN-3 Union Type		
Name	**Imcs_Type**	
Comment		
Value	ImcsValue_Type	
NotUsed	Null_Type	

ULGrant_Period_Type

TTCN-3 Union Type		
Name	**ULGrant_Period_Type**	
Comment		
OnlyOnce	Null_Type	grant is sent out only once; no period
Duration	integer (1..infinity)	duration of the grant period (TTI=1ms); for TDD the starting time and periodicity need to be chosen in TTCN so that the grants are assigned at valid subframes only; otherwise SS shall raise an error

TransmissionRepetition_Type

TTCN-3 Union Type		
Name	**TransmissionRepetition_Type**	
Comment		
Continuous	Null_Type	
NumOfCycles	integer (1..infinity)	

PUCCH_AutoSynch_Type

TTCN-3 Record Type			
Name	**PUCCH_AutoSynch_Type**		
Comment			
TimingAdvance	TimingAdvanceIndex_Type		
TA_Period	TimingAdvance_Period_Type		time period after which TA MAC control elements need to be automatically transmitted
TA_Repetition	TransmissionRepetition_Type		number of TA MAC control element repetitions to be automatically transmitted or 'Continuous'

PUCCH_Synch_Type

TTCN-3 Union Type		
Name	**PUCCH_Synch_Type**	
Comment		
None	Null_Type	no PUCCH Synchronisation applied
Auto	PUCCH_AutoSynch_Type	SS automatically maintains PUCCH synchronization at UE

FreqDomainSchedulCommon_Type

TTCN-3 Record Type			
Name	**FreqDomainSchedulCommon_Type**		
Comment	common type to specify restrictions for frequency domain scheduling by a start index and a maximum range of RBs; in general the resource allocation refers to virtual resource blocks: - format 1A (localised): FirstRbIndex refers to the first physical RB; the RBs are subsequent (upto MaxRbCnt RBs); may be applied for all kind of channels - format 1C (distributed): FirstRbIndex refers to the first virtual RB; the virtual RBs are subsequent (upto MaxRbCnt RBs) but mapped (distributed) to physical resource; typically applied on BCCH, PCCH and RAR - format 1 (localised): FirstRbIndex refers to the first physical RB; RBs are not consecutive; SS needs to provided bitmap of RBs (see TS 36.523-3) to cope with mapping of virtual resource allocation (format 1C) applied on other channels; typically there are either - all channels having format 1A (localised) - BCCH, PCCH and RAR having format 1C (distributed) + DTCH/DCCH having format 1		
FirstRbIndex	integer		index of the first (vitual) resource block in frequency domain; 0 .. N(UL/DL, RB) - 1; NOTE: DCI format 1C refers to a virtual RB allocation i.e. the resource block index; differs from the physical resource allocation where the RBs are distributed over the whole frequency bandwidth (TS 36.213, clause 7.1.6.3)
MaxRbCnt	integer		max. number of resource blocks to be assigned; FirstRbIndex + MaxRbCnt <= N(UL/DL, RB); SS shall not assigned more than the given resource blocks to the respective channel (i.e. MaxRbCnt is the upper bound); if the the configuration for a channel exceeds the total bandwidth this is a TTCN error (=> SS shall raise an error)

FreqDomainSchedulExplicit_Type

TTCN-3 Record Type			
Name	**FreqDomainSchedulExplicit_Type**		
Comment	type used for explicit DL scheduling; Nprb is the exact nunber of RBs whereas in FreqDomainSchedulCommon_Type MaxRbCnt is the upper bound		
FirstRbIndex	integer		index of the first resource block in frequency domain; 0 .. N(UL/DL, RB) - 1
Nprb	integer		number of resource blocks to be assigned;

PdcchDciFormat_Type

TTCN-3 Enumerated Type	
Name	**PdcchDciFormat_Type**
Comment	DCI format acc. to TS 36.212, clause 5.3.3.1; SS shall apply physical parameters accordingly as specified in TS 36.508, clause 4.3.6
dci_0	physical layer parameters acc. TS 36.508 Table 4.3.6.1.1-1
dci_1	physical layer parameters acc. TS 36.508 Table 4.3.6.1.2-1
dci_1A	physical layer parameters acc. TS 36.508 Table 4.3.6.1.3-1
dci_1B	
dci_1C	physical layer parameters acc. TS 36.508 Table 4.3.6.1.4-1
dci_1D	
dci_2	physical layer parameters acc. TS 36.508 Table 4.3.6.1.5-1
dci_2A	physical layer parameters acc. TS 36.508 Table 4.3.6.1.6-1
dci_2B	
dci_2C	
dci_2D	
dci_3	
dci_3A	
dci_4	

PdcchResourceAllocation_Type

TTCN-3 Enumerated Type	
Name	**PdcchResourceAllocation_Type**
Comment	Resource allocation acc. TS 36.213, clause 7.1.6
ra_0	
ra_1	
ra_2_Localised	=> physical and virtual RB index are identical
ra_2_Distributed	=> virtual resource allocation

MIMO_PrecodingBits_Type

TTCN-3 Union Type		
Name	**MIMO_PrecodingBits_Type**	
Comment	Number of bits for precoding information acc. TS 36.212, table 5.3.3.1.5-3 and 5.3.3.1.5A-1	
None	Null_Type	DCI 2A: 2 antenna ports at eNodeB (table 5.3.3.1.5A-1)
Bit2	B2_Type	DCI 2A: 4 antenna ports at eNodeB (table 5.3.3.1.5A-1)
Bit3	B3_Type	DCI 2: 2 antenna ports at eNodeB (table 5.3.3.1.5-3)
Bit6	B6_Type	DCI 2: 4 antenna ports at eNodeB (table 5.3.3.1.5-3)

MIMO_DciDlInfo_Type

TTCN-3 Record Type			
Name	**MIMO_DciDlInfo_Type**		
Comment	additional information for DL DCI in case of MIMO (i.e. when a 2nd CW is specified)		
RedundancyVersionList_2ndCW	RedundancyVersionListDL_Type	opt	list of Redundancy version for 2nd code word; shall have the same length as RedundancyVersionList_1stCW; if omit, for the 2nd CW the same RedundancyVersionList shall be applied as for the 1st CW
CodeWordSwapFlag	B1_Type		transport block to codeword mapping acc. to TS 36.212 Table 5.3.3.1.5-1
PrecodingBits	MIMO_PrecodingBits_Type		precoding information acc. TS 36.212, table 5.3.3.1.5-3 and 5.3.3.1.5A-1

DciDlInfoCommon_Type

TTCN-3 Record Type			
Name	**DciDlInfoCommon_Type**		
Comment	used for normal DL scheduling acc. to TS 36.523-3, clause 7.3		
Format	PdcchDciFormat_Type		BCCH, PCCH and RACH Response: 1A or 1C (TS 36.213, clause 7.1) CCCH: 1A since transmission mode is not (may not be) configured at the UE yet (TS 36.213, clause 7.1) DTCH/DCCH: depending on transmission mode
ResourceAllocType	PdcchResourceAllocation_Type		depends on DCI format, e.g. ra_2_Localised or ra_2_Distributed for DCI format 1A
Modulation_1stCW	Modulation_Type		max. modulation scheme for the 1st code word; depending on the amount of data a lower modulation scheme may be by SS but not a higher one; BCCH, PCCH and RACH Response: QPSK only
Modulation_2ndCW	Modulation_Type		modulation scheme for 2nd code word in case of spatial multiplexing; can be different than 1st code word (see TS 36.211, clause 6.3.2; TS 36.212, clause 5.3.3.1.5); 'unused' when there is no spatial multiplexing; NOTE: Acc. to 36.523-3 cl. 7.3.3.4 in normal mode MIMO shall not be used => for the time being Modulation_2ndCW is always "unused"
FreqDomainSchedul	FreqDomainSchedulCommon_Type		index of 1st RB; max. number of RBs per TTI; NOTE: in case of DCI format 1C the first RB index has no meaning since distributed virtual resource blocks assigned in this case (TS 36.213, clause 7.1.6.3)
RedundancyVersionList	RedundancyVersionListDL_Type		list of Redundancy version to be used in case of retransmission; the number of elements in the list provides the maxHARQ-Tx

DciDlInfoExplicit_Type

TTCN-3 Record Type			
Name	**DciDlInfoExplicit_Type**		
Comment	used for explicit DL scheduling acc. to TS 36.523-3, clause 7.3		
Imcs_1stCW	Imcs_Type		MCS index of table 7.1.7.1-1 of TS 36.213
Imcs_2ndCW	Imcs_Type		MCS index for the 2nd code word in case of MIMO; 'NotUsed' when MIMO is not used
Format	PdcchDciFormat_Type		
ResourceAllocType	PdcchResourceAllocation_Type		
FreqDomainSchedul	FreqDomainSchedulExplicit_Type		
RedundancyVersionList	RedundancyVersionListDL_Type		list of Redundancy version to be used in case of retransmission the number of elements in the list provides the maxHARQ-Tx
MimoInfo	MIMO_DciDlInfo_Type	opt	shall be present when Imcs_2ndCW specifies a 2nd CW to be used; shall be omit when Imcs_2ndCW is 'NotUsed'

DciDlInfo_Type

TTCN-3 Union Type		
Name	**DciDlInfo_Type**	
Comment		
Auto	DciDlInfoCommon_Type	SS shall chose the appropriate TBS up to the maximim number of resource blocks
Explicit	DciDlInfoExplicit_Type	used in MAC or RAB tests where exact TBS needs to be specified

DciUlInfo_Type

TTCN-3 Record Type			
Name	**DciUlInfo_Type**		
Comment			
Imcs	Imcs_Type		MCS index of table 8.6.1-1 of TS 36.213
TransRetransmissionList	UL_TransRetransmissionList_Type		list of possible retransmissions and their redundancy versions (depending on being adapive or non-adaptive); the list shall - start with - "New Transmission" (normal case) or - "Adaptive Retransmission" (e.g. to request a retransmission even when the data has been acknowledged with a HARQ ACK) - end with "Adaptive Retransmission" (if there are retransmissions) NOTE1: TTCN implementation shall ensure that a reconfiguration is done not before the previous list has been fully processed NOTE2: for normal operation the list contains only one NewTransmission element (i.e. possible retransmissions are non-adaptive)
FreqDomainSchedul	FreqDomainSchedulExplicit_Type		

PeriodicGrant_Type

TTCN-3 Record Type			
Name	**PeriodicGrant_Type**		
Comment			
Period	ULGrant_Period_Type		time period after which UL Grant need to be automatically transmitted or 'OnlyOnce'
NoOfRepetitions	TransmissionRepetition_Type		number of UL Grant repetitions to be automatically transmitted or continuous repetition

UL_GrantConfig_Type

TTCN-3 Union Type		
Name	**UL_GrantConfig_Type**	
Comment		
OnSR_Reception	Null_Type	SS tranmits UL Grant as configured by CommonDciInfoUL_Type at every reception of SR; to be used in non L2 Test
Periodic	PeriodicGrant_Type	SS tranmits UL Grant as configured by CommonDciInfoUL_Type periodically; to be used in L2 tests; MAC tests testing Grants might set the period as infinite and num grant as 1
None	Null_Type	disable any grant transmission

D.1.3.5 Random_Access_Procedure

EUTRA_ASP_TypeDefs: Constant Definitions

TTCN-3 Basic Types			
tsc_RandomAccessResponseListSize	integer	10	arbitrary value (needs to be extended, if necessary); in case of RACH in idle, UE will keep on making RACH attempts until t300 expires => number of PRACH preambles maybe even greater than maximum value of PREAMBLE_TRANS_MAX

Random_Access_Procedure: Basic Type Definitions

TTCN-3 Basic Types		
RACH_TimingAdvance_Type	integer (0..2047)	11 bit timing advance as used in RACH response (absolute value)

UplinkGrant_Type

TTCN-3 Record Type			
Name	**UplinkGrant_Type**		
Comment	TS 36.213, clause 6.2		
HoppingFlag	B1_Type		Hopping flag
RB_Allocation	B10_Type		Fixed size resource block assignment
ModAndCodScheme	B4_Type		Truncated modulation and coding scheme
TPC_Command	B3_Type		TPC command for scheduled PUSCH
UL_Delay	B1_Type		UL delay
CQI_Req	B1_Type		CQI request

ContentionResolution_ContainedRlcPdu_Type

TTCN-3 Union Type		
Name	**ContentionResolution_ContainedRlcPdu_Type**	
Comment		
RlcPdu	octetstring	octetstring of an RLC PDU containing e.g. the RRC Connection Setup; to be sent in the same MAC PDU as the MAC Contention Resolution Control Element
None	Null_Type	MAC PDU containing the MAC Contention Resolution Control Element does not contain an RLC PDU (i.e. RRC Connection Setup is sent in another PDU)

ContentionResolution_ContainedId_Type

TTCN-3 Union Type		
Name	**ContentionResolution_ContainedId_Type**	
Comment		
XorMask	ContentionResolutionId_Type	When SS receives Contention Resolution ID from the UE, SS shall XOR it with the given mask and use this as Contention Resolution ID; this allows to get an unmatching Contention Resolution ID; in normal cases mask shall be set to tsc_ContentionResolutionId_Unchanged (i.e. the Contention Resolution ID remains unchanged)
None	Null_Type	MAC Contention Resolution Control Element is not contained in the MAC PDU sent out as response on Msg3

TCRNTI_ContentionResolutionMacPdu_Type

TTCN-3 Record Type			
Name	**TCRNTI_ContentionResolutionMacPdu_Type**		
Comment	NOTE: Either ContainedId or ContainedRlcPdu (or both) shall not be 'none'; (if no Contention Resolution Mac Pdu shall be sent, TCRNTI_ContentionResolutionCtrl_Type.NoContResolID shall be used instead)		
ContainedId	ContentionResolution_ContainedId_Type		Either the Contention Resolution ID as received from the UE or a modified Contention Resolution ID (XorMask != tsc_ContentionResolutionId_Unchanged) or no Contention Resolution ID at all
ContainedRlcPdu	ContentionResolution_ContainedRlcPdu_Type		the MAC PDU containing the MAC Contention Resolution Control Element may contain the RRC Connection Setup; in this case the RRC PDU shall be completely encoded been contained in an RLC PDU

TCRNTI_ContentionResolutionCtrl_Type

TTCN-3 Union Type		
Name	**TCRNTI_ContentionResolutionCtrl_Type**	
Comment	when the UE responds on a Random Access Response with a RRC Connection Request on CCCH and not with a C-RNTI SS shall assume initial Random Access Procedure (TS 36.300, clause 10.1.5.1), i.e. sends a ContentionResolutionId back to the UE	
MacPdu	TCRNTI_ContentionResolutionMacPdu_Type	MAC PDU containing the Contention Resolution ID and optionally an RRC PDU (RRC Connection Setup)
MacPdu_CRC_Error	TCRNTI_ContentionResolutionMacPdu_Type	same as MacPdu (see above), but SS shall generate CRC error by toggling CRC bits; no retransmissions shall be made as UE shall not send a NACK
NoContResolID	Null_Type	SS shall not include contention resolution ID (i.e. no MAC PDU shall be sent); used for contention resolution fail case

CRNTI_ContentionResolutionCtrl_Type

TTCN-3 Union Type		
Name	**CRNTI_ContentionResolutionCtrl_Type**	
Comment	configuration for Random Access Procedure in RRC_CONNECTED (see TS 36.300, clause 10.1.5.1); when SS receives C-RNTI MAC element sent by the UE after Random Access Response, SS shall deal with the C-RNTI as specified in this structure	
AutomaticGrant	DciUlInfo_Type	before expiry of the contention resolution timer SS shall automatically address PDCCH using C-RNTI as sent by the UE; the UL grant is specified acc. to DciUlInfo_Type
None	Null_Type	Used in case of dedicated preamble transmission or to simulate failure cases; SS shall not address PDCCH using C-RNTI => expiry of contention resolution timer on UE side

ContentionResolutionCtrl_Type

TTCN-3 Union Type		
Name	**ContentionResolutionCtrl_Type**	
Comment	NOTE: SS only needs to consider one kind of contention resolution at one time; in the initial configuration of a cell TCRNTI_Based shall be configured and the common assuption is that in RRC_CONNECTED normally there are no RACH procedures (i.e. no CRNTI_Based configuration needed) whereas e.g. in case of handover scenarios CRNTI_Based shall be configured	
TCRNTI_Based	TCRNTI_ContentionResolutionCtrl_Type	TCRNTI based contention resolution (e.g. initial access), hence involves inclusion contention resolution identity in DL message 4 of RACH procedure
CRNTI_Based	CRNTI_ContentionResolutionCtrl_Type	CRNTI based contention resolution (e.g. in case UE is being in RRC_CONNECTED): hence uplink message in step 3 (of RACH procedure) is followed by PDCCH transmission with UE C-RNTI to end procedure

RapIdCtrl_Type

TTCN-3 Union Type		
Name	**RapIdCtrl_Type**	
Comment		
Automatic	Null_Type	SS shall automatically use same RAPID as received from the UE
Unmatched	Null_Type	SS shall use RAPID being different from preamble sent by the UE; SS shall calculate this RAPID acc. to RAPID := (RAPID + 3..63) mod 64 if single RAR is transmitted in a MAC PDU then only 3 is added if multiple RAR's are transmitted in MAC PDU, then for first unmatched RAR 3 is added, second unmatched 4 is added, third unmatched 5 is added and so on

TempC_RNTI_Type

TTCN-3 Union Type		
Name	**TempC_RNTI_Type**	
Comment		
SameAsC_RNTI	Null_Type	in the RA response SS shall use the same C-RNTI as configured in ActiveCellConfig_Type; this is useful for initial random access
Explicit	C_RNTI	in the RA response SS shall use different value as configured in ActiveCellConfig_Type; this can be used when the UE already is in RRC_CONNECTED to have a temporary C-RNTI different from the one used by the UE; NOTE: when the UE is not in RRC_CONNECTED there shall be no explicit temp. C-RNTI since then the UE would assume this value as C-RNTI

RandomAccessResponseParameters_Type

TTCN-3 Record Type			
Name	**RandomAccessResponseParameters_Type**		
Comment	paramenters to control content of RAR sent to the UE		
RapId	RapIdCtrl_Type		to control Random Access Preamble Id to be sent back to the UE; used in RAR MAC sub-header
InitialGrant	UplinkGrant_Type		initial UL grant
TimingAdvance	RACH_TimingAdvance_Type		timing advance: granularity of 0.52 micro sec (16*Ts); see TS 36.300, clause 5.2.7.3, TS 36.321, clause 6.1.3.5; NOTE: timing advance has impact not only on the RA procedure; SS in general needs to adjust its timing accordingly
TempC_RNTI	TempC_RNTI_Type		NOTE: For initial Random Access Procedure at network (SS) side there is no temporary C-RNTI: network assigns the C-RNTI which is used by any UE as being temporary; the UE which 'wins' the contention resolution keeps the (temporary) C-RNTI; other UEs need to repeat the RACH procedure; => at the SS the TempC_RNTI shall be 'SameAsC_RNTI' For Random Access Procedure in RRC_CONNECTED state the NW assigns a temporary C-RNTI which is replaced by the one stored at the UE; => TempC_RNTI may be 'SameAsC_RNTI' (in this case temp. C-RNTI and C-RNTI are equal what is not likely in a real network), or there is an explicit temp. C-RNTI what is used during RA procedure only (as in a real network)

RarList_Type

TTCN-3 Record of Type	
Name	**RarList_Type**
Comment	in general MAC PDU may contain one or several RARs; normally only one RAR is contained
record of RandomAccessResponseParameters_Type	

RandomAccessResponse_Type

TTCN-3 Union Type		
Name	**RandomAccessResponse_Type**	
Comment		
None	Null_Type	used for unsuccessful RA procedure
List	RarList_Type	normally one RAR to be sent to the UE; in general there can be more than one RAR

RandomAccessBackoffIndicator_Type

TTCN-3 Union Type		
Name	**RandomAccessBackoffIndicator_Type**	
Comment		
None	Null_Type	normal case, no back off indicator included
Index	integer (0..15)	Backoff Parameter values acc. TS 36.321, clause 7.2; values 0..12 are defined, 13..15 may be used in error case

RandomAccessResponseCtrl_Type

TTCN-3 Record Type			
Name	**RandomAccessResponseCtrl_Type**		
Comment	configuration for Random Access Response mapped to DL-SCH mapped to PDSCH TransmissionMode: single antenna mode when there is only one antenna configured, transmit diversit else; RNTI: RA-RNTI (TS 36.321, clause 7.1); if both RAR msg and backoff indicator are 'None' SS shall not respond on RAP		
DciInfo	DciDlInfoCommon_Type		DCI format: 1A or 1C (TS 36.213, clause 7.1) ResourceAllocType: 2 (acc. to DCI format) Modulation: QPSK Frequency domain schedule: index of 1st RB; max. number of RBs per TTI
Rar	RandomAccessResponse_Type		RAR to be sent to the UE
BackoffInd	RandomAccessBackoffIndicator_Type		possible backoff indicator; 'None' for normal cases

RandomAccessResponseConfig_Type

TTCN-3 Union Type		
Name	**RandomAccessResponseConfig_Type**	
Comment		
Ctrl	RandomAccessResponseCtrl_Type	contains information to control sending of RAR
Ctrl_CRC_Error	RandomAccessResponseCtrl_Type	same as Ctrl (see above), but MAC PDU transmitted will contain CRC bits (0-3) being toggled; no retransmissions shall be made as UE shall not send a NACK
None	Null_Type	to be used when there is no RAR to be sent at all

RachProcedure_Type

TTCN-3 Record Type			
Name	**RachProcedure_Type**		
Comment			
RAResponse	RandomAccessResponseConfig_Type		control of how the SS shall react on RA preamble; this may be - the RAP id as expected by the UE - a RAP id not matching to the UE's RAP - a backoff indicator - nothing at all
ContentionResolutionCtrl	ContentionResolutionCtrl_Type		

RachProcedureList_Type

TTCN-3 Record of Type	
Name	**RachProcedureList_Type**
Comment	to simulate RACH procedure with one or more than one attempt by the UE: 1. Normal cases: one single RandomAccessResponse is sent to the UE matching the UE's RACH preamble; contention resolution is successful immediately => list contains only one element which is used for any RA procedure (Even if a RACH procedure is repeated by the UE for any reason this element shall be used; e.g. it needs not to be handled as error when the UE sends another RACH preamble instead of the RRC connection request message) 2. Special cases: there are upto tsc_RandomAccessResponseListSize preambles sent by the UE => there are upto tsc_RandomAccessResponseListSize responses to be configured as elements of the list; SS shall start with the first element in the list and use the RAR as specified in this element; if the RAR matches at the UE side the UE will send UL data and contention resolution is performed as configured for this element; if the RAR does not match the UE sends another RAP and SS continues with the next element in the list; in this case the contention resolution of the respective element is not used; if the end of the list is reached and further RACH preambles are sent by the UE SS shall repeatively apply the last element of the list (this is necessary because there might be not enough time to reconfigure SS after the end of the list has been reached and there shall be well-defined behaviour after the list has been processed); to change from a special mode to normal mode the RachProcedureList is reconfigured by TTCN to achieve transparency and readability of the code; NOTE: when there are RACH_ConfigDedicated configured (see below) and the RA preamble matches with one the configured ones the contention resolution ctrl is obsolete (non contention based random access procedure)
record length(1..tsc_RandomAccessResponseListSize) of RachProcedure_Type	

RachProcedureConfig_Type

TTCN-3 Record Type			
Name	**RachProcedureConfig_Type**		
Comment	parameters to control the random access procedure; TS 36.321, clause 5.1		
RACH_ConfigCommon	RACH_ConfigCommon_Type	opt	acc. TS 36.331, clause 6.3.2; may not be necessary for SS; omit: "keep as it is"
RACH_ConfigDedicated	RACH_ConfigDedicated_Type	opt	acc. TS 36.331, clause 6.3.2; when random access preamble sent by the UE matches with the configured one, SS shall assume the random access procedure being non-contention based; initial configuration: no RACH_ConfigDedicated are configured; omit means "keep as it is"
RachProcedureList	RachProcedureList_Type	opt	in normal cases there is one element which is used for any RA procedure; special cases are used in MAC test cases; omit means "keep as it is"

D.1.3.6 System_Information_Control

Primitive to configuration BCCH/BCH

System_Information_Control: Basic Type Definitions

TTCN-3 Basic Types		
BcchToPbchConfig_Type	Null_Type	place holder for BCCH mapped to BCH mapped to PBCH: MIB using fixed scheduling (periodicity: 40ms); transmission mode: single antenna port configuration (layer mapping acc. TS 36.211, clause 6.3.3.1) or transmit diversity (layer mapping acc. TS 36.211, clause 6.3.3.3) depending on antenna configuration

Sib1Schedul_Type

TTCN-3 Record Type			
Name	**Sib1Schedul_Type**		
Comment	SIB1: fixed scheduling in time domain acc. TS 36.331, clause 5.2.1.2 (periodicity: 80ms; repetitions every 20ms)		
DciInfo	DciDlInfoCommon_Type	opt	DCI format: 1A or 1C (TS 36.213, clause 7.1) ResourceAllocType: 2 (acc. to DCI format) Modulation: QPSK Frequency domain schedule: index of 1st RB; max. number of RBs per TTI

SingleSiSchedul_Type

TTCN-3 Record Type			
Name	**SingleSiSchedul_Type**		
Comment	specifies scheduling for a single SI in freq and time domain		
DciInfo	DciDlInfoCommon_Type	opt	DCI format: 1A or 1C (TS 36.213, clause 7.1) ResourceAllocType: 2 (acc. to DCI format) Modulation: QPSK Frequency domain schedule: index of 1st RB; max. number of RBs per TTI
SubframeOffset	integer	opt	offset within the SI-window; NOTE: SI-window may span more than one frame

SiSchedul_Type

TTCN-3 Record Type			
Name	**SiSchedul_Type**		
Comment	specifies for a specific SI scheduling and repetitions within as SI window		
Periodicity	SiPeriodicity_Type	opt	
Window	record of SingleSiSchedul_Type	opt	NOTE: acc. to TS 36.331, clause 5.2.1.2 the same SI may occur more than once in an SI-window; to allow this there is a "record of" even though acc. to TS 36.508, clause 4.4.3.3 all SIs are sent only once within the window

SiSchedulList_Type

TTCN-3 Record of Type	
Name	**SiSchedulList_Type**
Comment	
record length(1..maxSI_Message) of SiSchedul_Type	

AllSiSchedul_Type

TTCN-3 Record Type			
Name	**AllSiSchedul_Type**		
Comment			
WindowLength	SiWindowLength_Type	opt	to calculate start of each SI window acc. TS 36.331, clause 5.2.3
SiList	SiSchedulList_Type	opt	list of scheduling info for the SIs containing one ore more SIBs
SegmentedSiList	SiSchedulList_Type	opt	list of scheduling info for segmented SIs (e.g. SI containing SIB11); corresponds to SegmentedSIs in BcchInfo_Type: SS shall subsequently schedule the elements of the corresponding SegmentedSIs (BcchInfo_Type); e.g. SegmentedSiList[i] provided scheduling info for BcchInfo_Type's SegmentedSIs[i] and the kth element of SegmentedSIs[i] is sent at T0 + ((K * N) + k) * periodicity with K: number for segments k = 0 .. K-1 N = 0, 1, 2, ... T0, peridicity: scheduling info as given by SegmentedSiList[i]

BcchToPdschConfig_Type

TTCN-3 Record Type			
Name	**BcchToPdschConfig_Type**		
Comment	configuration for BCCH mapped to DL-SCH mapped to PDSCH TransmissionMode: single antenna mode when there is only one antenna configured, transmit diversity else; RNTI: SI-RNTI (TS 36.321, clause 7.1)		
Sib1Schedul	Sib1Schedul_Type	opt	scheduling of SIB1 in frequency domain
SiSchedul	AllSiSchedul_Type	opt	scheduling of SIs in frequency and time domain

SI_List_Type

TTCN-3 Record of Type	
Name	**SI_List_Type**
Comment	TS 36.331, clause 6.2.1 BCCH-DL-SCH-Message and clause 6.2.2 SystemInformation
record of BCCH_DL_SCH_Message	

SegmentedSI_List_Type

TTCN-3 Record of Type	
Name	**SegmentedSI_List_Type**
Comment	Each element is a list of segments; used for SIB11/12 segmentation
record of SI_List_Type	

BcchInfo_Type

TTCN-3 Record Type			
Name	**BcchInfo_Type**		
Comment	all fields are declared as optional to allow modification of single field; acc. to TS 36.331, clause 9.1.1.1 "RRC will perform padding, if required due to the granularity of the TF signalling, as defined in 8.5."; therefore this needs to be done by the system simulator		
MIB	BCCH_BCH_Message	opt	TS 36.331, clause 6.2.1 BCCH-BCH-Message and clause 6.2.2 MasterInformationBlock; NOTE: the sequence number included in MIB needs to be handled and maintained by the system simulator; that means that the sequence number being setup by TTCN will be overwritten by SS
SIB1	BCCH_DL_SCH_Message	opt	TS 36.331, clause 6.2.1 BCCH-DL-SCH-Message and clause 6.2.2 SystemInformationBlockType1
SIs	SI_List_Type	opt	list of SIs coerrsponding to SiList of AllSiSchedul_Type (i.e. element i of AllSiSchedul_Type's SiList specifies the scheduling for SIs[i])
SegmentedSIs	SegmentedSI_List_Type	opt	list of SIs containing segmented SIBs; corresponds to SegmentedSiList in AllSiSchedul_Type

BcchConfig_Type

TTCN-3 Record Type			
Name	**BcchConfig_Type**		
Comment	all fields are optional to allow single modifications; activation time may be applied in the common part of the ASP; NOTE 1: acc. to TS 36.331, clause 9.1.1.1 there is no PDCP and RLC/MAC are in TM NOTE 2: mapping/scheduling and contents of the System Information in general is done in one go (i.e. there are no separate ports for SIB data and configuration)		
Pbch	BcchToPbchConfig_Type	opt	
Pdsch	BcchToPdschConfig_Type	opt	
BcchInfo	BcchInfo_Type	opt	

D.1.3.7 Paging_Control

Primitive to configuration PCCH/PCH

PcchConfig_Type

TTCN-3 Record Type			
Name	**PcchConfig_Type**		
Comment	configuration for PCCH mapped to PCH mapped to PDSCH TransmissionMode: single antenna mode when there is only one antenna configured, transmit diversity else; RNTI: P-RNTI (TS 36.321, clause 7.1) NOTE: acc. to TS 36.331, clause 9.1.1.3 there is no PDCP and RLC/MAC are in TM		
DciInfo	DciDlInfoCommon_Type	opt	DCI format: 1A or 1C (TS 36.213, clause 7.1) ResourceAllocType: 2 (acc. to DCI format) Modulation: QPSK Frequency domain schedule: index of 1st RB; max. number of RBs per TTI

D.1.3.8 UE_Specific_Channel_Configuration

D.1.3.8.1 UE_Specific_Channel_Configuration_DL

Scheduling and other information for CCCH/DCCH/DTCH mapped to DL-SCH mapped to PDSCH

D.1.3.8.1.1 MIMO_Configuration

Precoding information for spatial multiplexing (DCI format 2)

PrecodingInfoForOneCodeWord_Type

TTCN-3 Union Type		
Name	**PrecodingInfoForOneCodeWord_Type**	
Comment	NOTE: not all index values may make sense (e.g. the indices refering to the values reported by the UE)	
TwoAntennasClosedLoop	integer (0..6)	index acc. to TS 36.212 Table 5.3.3.1.5-2; RI = 1; transmit diversity or code book index 0..3 acc. TS 36.211 Table 6.3.4.2.3-1
FourAntennasClosedLoop	integer (0..34)	index acc. to TS 36.212 Table 5.3.3.1.5-3; RI = 1..2; transmit diversity or code book index 0..15 acc. TS 36.211 Table 6.3.4.2.3-2
TwoAntennasOpenLoop	Null_Type	no precoding info; RI=1 when only codeword 1 is enabled
FourAntennas OpenLoop	integer (0..1)	index acc. to TS 36.212 Table 5.3.3.1.5-4 RI = 1..2; RI=1 => transmit diversity; RI=2 => large delay CDD

PrecodingInfoForTwoCodeWords_Type

TTCN-3 Union Type		
Name	**PrecodingInfoForTwoCodeWords_Type**	
Comment	NOTE: not all index values may make sense (e.g. the indices refering to the values reported by the UE)	
TwoAntennasClosedLoop	integer (0..2)	index acc. to TS 36.212 Table 5.3.3.1.5-2; RI = 2; code book index 1, 2 acc. TS 36.211 Table 6.3.4.2.3-1
FourAntennasClosedLoop	integer (0..50)	index acc. to TS 36.212 Table 5.3.3.1.5-3; RI = 2..4; code book index 0..15 acc. TS 36.211 Table 6.3.4.2.3-2
TwoAntennasOpenLoop	Null_Type	no precoding info; RI=2 when both codewords are enabled
FourAntennas OpenLoop	integer (0..2)	index acc. to TS 36.212 Table 5.3.3.1.5-4 RI = 2..4; large delay CDD

PrecodingInfoIndex_Type

TTCN-3 Union Type		
Name	**PrecodingInfoIndex_Type**	
Comment		
OneCodeWord	PrecodingInfoForOneCodeWord_Type	only codeword 1 shall be enabled in the DCI
TwoCodeWords	PrecodingInfoForTwoCodeWords_Type	both codewords shall be enabled in the DCI

PrecodingOperationMode_Type

TTCN-3 Enumerated Type	
Name	**PrecodingOperationMode_Type**
Comment	how to determine precoding information for spatial multiplexing is signalled on PDCCH with DCI format 2 and 2A (TS 36.212, clause 5.3.3.1.5)
hardcoded	SS shall apply configured precoding info as configured regardless RI and PMI reported by the UE
automatic	SS shall apply configured precoding info as long as there are no RI and PMI reported by the UE; when there are RI and PMI reported by the UE these shall be used

SpatialMultiplexingInfo_Type

TTCN-3 Record Type			
Name	**SpatialMultiplexingInfo_Type**		
Comment	NOTE: there may be codebookSubsetRestriction as signalled to the UE (TS 36.331, clause 6.3.2 AntennaInfoDedicated) to be considered		
OperationMode	PrecodingOperationMode_Type		
PrecodingIndex	PrecodingInfoIndex_Type		NOTE: contains information about number of code words to be used in DCI format 2

HarqProcessConfigDL_Type

TTCN-3 Union Type		
Name	**HarqProcessConfigDL_Type**	
Comment	HARQ processes to be used automatically for DL assignments	
AllProcesses	Null_Type	all HARQ processes shall be used for automatic assignmnet; this is the normal case
SpecificSubset	HarqProcessList_Type	only the HARQ processes of this list shall be used automatically, other processes are excluded from automatic assignments; nevertheless all HARQ processes may be addressed explicitly by DRB_DataPerSubframe_DL_Type.HarqProcess

CcchDcchDtchConfigDL_Type

TTCN-3 Record Type			
Name	**CcchDcchDtchConfigDL_Type**		
Comment	configuration for CCCH/DCCH/DTCH mapped to DL-SCH mapped to PDSCH TransmissionMode: as signalled to the UE (AntennaInfoDedicated in RRCConnectionSetup); RNTI: C-RNTI (TS 36.321, clause 7.1); all fields optional (omit = "keep as it is") since DCI format and modulation may be changed during a test; for initial configuration all fields are mandatory		
DciInfo	DciDlInfo_Type	opt	DCI format: 1A per default since for CCCH mimo cannot be applied in general ResourceAllocType: (depending on DCI format) Modulation: QPSK for signalling Frequency domain schedule: index of 1st RB; max. number of RBs per TTI; in case of spatial multiplexing if there are 2 code words FreqDomainSchedul shall be applied to both
AntennaInfo	AntennaInfoDedicated_Type	opt	as signalled to the UE (TS 36.331, clause 6.3.2): transmissionMode, codebookSubsetRestriction
HarqProcessConfig	HarqProcessConfigDL_Type	opt	HARQ processes automatically used by the SS in DL

D.1.3.8.2 UE_Specific_Channel_Configuration_UL

Scheduling information for CCCH/DCCH/DTCH mapped to UL-SCH mapped to PUSCH

PucchHoppingBits_Type

TTCN-3 Union Type		
Name	**PucchHoppingBits_Type**	
Comment	Number of hopping bits acc. to TS 36.213 table 8.4-2	
OneBit	B1_Type	N(UL, RB) = 6..49 i.e. default system bandwid this less than 10 MHz (does not include 10 MHz)
TwoBits	B2_Type	N(UL, RB) = 50..110 i.e. default system bandwidth is 10 MHz or above

UplinkHoppingResourceParameters_Type

TTCN-3 Record Type			
Name	**UplinkHoppingResourceParameters_Type**		
Comment			
PucchHopping	PucchHoppingBits_Type		to control hopping resource allocation as signalled in DCI format 0 (TS 36.212, clause 5.3.3.1.1)

UplinkHoppingControl_Type

TTCN-3 Union Type		
Name	**UplinkHoppingControl_Type**	
Comment	shall be considered by SS to fill in the information needed for DCI format 0 (TS 36.213, clause 7.1)	
Deactivated	Null_Type	
Activated	UplinkHoppingResourceParameters_Type	

CcchDcchDtchConfigUL_Type

TTCN-3 Record Type			
Name	**CcchDcchDtchConfigUL_Type**		
Comment	scheduling for CCCH/DCCH/DTCH mapped to UL-SCH mapped to PUSCH NOTE 1: for definition of the possible UL grants the location of the PUCCH (TS 36.211, clause 5.4.3) and the PRACH (TS 36.211, clause 5.7.3) need to be taken into account; NOTE 2: In contrast to the DL where the scheduling can be done (with consideration of some restrictions) by SS on a per need basis in the UL the scheduling depends on information provided by the UE: e.g. BSR (buffer status report), SR (scheduling request) see TS 36.523-3 clause 7.2 for further information.		
DciInfo	DciUlInfo_Type	opt	DCI format: 0 (TS 36.213, clause 7.1) ResourceAllocType: 2 (acc. to DCI format) Modulation: QPSK per default Frequency domain schedule: index of 1st RB; max. number of RBs per TTI (upper bound up to which SS may assign grants to the UE)
Hopping	UplinkHoppingControl_Type	opt	when Hopping = 'Activated' SS shall set hopping flag in DCI format 0
PUCCH_Synch	PUCCH_Synch_Type	opt	parameters to control automatic control of timing advance
UL_GrantConfig	UL_GrantConfig_Type	opt	UL grant allocation to be applied

DrxCtrl_Type

TTCN-3 Union Type		
Name	**DrxCtrl_Type**	
Comment	DRX configuration for connected mode (TS 36.321, clause 5.7)	
None	Null_Type	DRX not configured
Config	DRX_Config_Type	DRX is configured as signalled to the UE; NOTE: the release branch of DRX-Config in general is not used for configuration of the SS

MeasGapCtrl_Type

TTCN-3 Union Type			
Name	**MeasGapCtrl_Type**		
Comment	support of measurement gap configuration		
None	Null_Type		no measurement gap configuration
Config	MeasGapConfig_Type		measurement gap configuration acc. to TS 36.331, clause 6.3.5 and gap pattern acc. TS 36.133 Table 8.1.2.1-1; NOTE: the release branch of MeasGapConfig in general is not used for configuration of the SS

CcchDcchDtchConfig_Type

TTCN-3 Record Type			
Name	**CcchDcchDtchConfig_Type**		
Comment			
MeasGapCtrl	MeasGapCtrl_Type	opt	to tell the SS when no assignments/grants shall be assigned to the UE
DL	CcchDcchDtchConfigDL_Type	opt	Scheduling, parameters related to CCCH, DCCH and DTCH in DL
UL	CcchDcchDtchConfigUL_Type	opt	Scheduling, parameters related to CCCH, DCCH and DTCH in UL
DrxCtrl	DrxCtrl_Type	opt	DRX configuration as sent to the UE (or 'None' when the UE does not support connected mode DRX)
TtiBundling	TTI_BundlingConfig_Type	opt	TTI bundling as configured at the UE
CifPresence	boolean	opt	corresponds to PhysicalConfigDedicated.cif_Presence_r10: The CIF field is applied for dedicated search space scheduling i.e. DCCH/DTCH. Not present for common search space scheduling. CIF indicator as true may be configured even in non CA cell, to facilitate the future false: no serving cell is cross scheduled by this cell true: carrier indicator field is present when the PDCCH CRC is scrambled by C-RNTI or SPS C-RNTI omit means "keep as it is"

D.1.3.9 Carrier_Aggregation

ActivateScell_Type

TTCN-3 Record Type			
Name	**ActivateScell_Type**		
Comment			
ScellActivation	ScellBitMap_Type		36.321 clause 6.1.3.8; B0=C7, B1=C6 .. B6=C1, B7 is reserved. B0 to B6, 1 means Activate associated Scell
SendMCE	boolean		If true the SS sends a MAC Control Element to the UE

Scell_Capability_Type

TTCN-3 Enumerated Type	
Name	**Scell_Capability_Type**
Comment	
DlOnly	the CC is configured in DL only, no aggregation in this cell in UL
UL_DL	the aggregation is configured in both UL and DL

ScellDeactivationTimer_Type

TTCN-3 Union Type		
Name	**ScellDeactivationTimer_Type**	
Comment	NOTE: this type is a union to allow semantic of "keep as it is" for optional fields of this type	
NumberOfRadioFrames	MAC_MainConfig_ScellDeactivationTimer_Type	SCell deactivation timer acc. to TS 36.321
1,#INF	Null_Type	ininity as when 'sCellDeactivationTimer' is omitted in 'MAC-MainConfig' sent to the UE

SCellIndexList_List

TTCN-3 Record of Type	
Name	**SCellIndexList_List**
Comment	
record length (1..7) of SCellIndex_r10	

CrossCarrierScheduledCellsList_Type

TTCN-3 Union Type		
Name	**CrossCarrierScheduledCellsList_Type**	
Comment		
None	Null_Type	No Cells Cross Scheduled by this Cell; CIF can still be true.
CrossScheduledCells	SCellIndexList_List	List of Scells Scheduled by this Scell; CIF field shall be true; Pcell cannot be cross scheduled

SchedulingCarrierConfig_Type

TTCN-3 Union Type		
Name	**SchedulingCarrierConfig_Type**	
Comment		
Own	CrossCarrierScheduledCellsList_Type	Cell is scheduled by itself and possible cross schedules other Scells
CrossScheduled	CrossSchedulingCarrierInfo_Type	Cell is cross Scheduled by other carrier; the CIF field shall be configured in the serving cell scheduling this scell

CrossCarrierSchedulingConfig_Type

TTCN-3 Union Type		
Name	**CrossCarrierSchedulingConfig_Type**	
Comment		
Config	SchedulingCarrierConfig_Type	When cross carrier scheduling is enabled then the CIF field shall be configured in the serving cell scheduling this scell
None	Null_Type	

PrimaryCellInfo_Type

TTCN-3 Record Type			
Name	**PrimaryCellInfo_Type**		
Comment			
AssociatedScellList	EUTRA_CellIdList_Type		List of Scells associated with the Pcell (needs to be consistent with AssociatedPcellId in Scell)
MeasSubframePatternPCell	MeasSubframePatternPCell_r10	opt	
CrossCarrierScheduledCellsList	CrossCarrierScheduledCellsList_Type	opt	Information of possible Cells Cross Scheduled by this cell

SecondaryCellInfo_Type

TTCN-3 Record Type			
Name	**SecondaryCellInfo_Type**		
Comment			
AssociatedPcellId	EUTRA_CellId_Type		cell ID of associated Pcell (eutra_Cell_NonSpecific is not allowed)
SCellIndex	SCellIndex_r10		
Scell_Capability	Scell_Capability_Type	opt	if DL only or both UL and DL (omit means "keep as it is")
ScellDeactivationTimer	ScellDeactivationTimer_Type	opt	SCell deactivation timer; omit means "keep as it is"; when there is more than one SCell associated to the same PCell this field shall be set to the same value for each SCell
CrossCarrierSchedulingConfig	CrossCarrierSchedulingConfig_Type	opt	omit means "keep as it is"

ServingCellConfig_Type

TTCN-3 Union Type		
Name	**ServingCellConfig_Type**	
Comment		
PCell	PrimaryCellInfo_Type	cell shall become PCell
SCell	SecondaryCellInfo_Type	cell shall become SCell
Release	Null_Type	cell is changed back to normal non CA cell

D.1.4 Cell_Power_Attenuation

CellAttenuationConfig_Type

TTCN-3 Record Type			
Name	**CellAttenuationConfig_Type**		
Comment			
CellId	EUTRA_CellId_Type		
Attenuation	Attenuation_Type		
TimingInfo	TimingInfo_Type	opt	

CellAttenuationList_Type

TTCN-3 Record of Type	
Name	**CellAttenuationList_Type**
Comment	
record length(1..tsc_EUTRA_MaxNumberOfCells) of CellAttenuationConfig_Type	

D.1.5 Radio_Bearer_Configuration

Radio Bearer Configuration: SRBs/DRBs

D.1.5.1 PDCP_Configuration

PDCP_SNLength_Type

TTCN-3 Enumerated Type	
Name	**PDCP_SNLength_Type**
Comment	PDCP Sequence Number
PDCP_SNLength5	TS 36.323 clause 6.2.2
PDCP_SNLength7	TS 36.323 clause 6.2.3
PDCP_SNLength12	TS 36.323 clause 6.2.4

PDCP_ROHC_Mode_Type

TTCN-3 Record Type			
Name	**PDCP_ROHC_Mode_Type**		
Comment			
SN_Size	PDCP_SNLength_Type		

PDCP_NonROHC_Mode_Type

TTCN-3 Record Type			
Name	**PDCP_NonROHC_Mode_Type**		
Comment			
SN_Size	PDCP_SNLength_Type		

PDCP_TestModeInfo_Type

TTCN-3 Union Type		
Name	**PDCP_TestModeInfo_Type**	
Comment		
PDCP_ROHC_Mode	PDCP_ROHC_Mode_Type	ROHC test mode acc. to TS 36.523-3, clause 4.2.1.3.1; requires PDCP to be configured for this RB => - SS applies ciphering in UL and DL - SS maintains PDCP sequence numbers and state variables Furthermore in this mode - SS does not add/remove PDCP headers (in UL the PDCP PDUs are decoded depending on SN_Size) - SS applies ROHC in DL only
PDCP_NonROHC_Mode	PDCP_NonROHC_Mode_Type	PDCP test mode acc. to TS 36.523-3, clause 4.2.1.3.2 (non-ROCH test mode); requires PDCP to be configured as transparent => - SS does not apply ciphering in UL and DL - SS does not interpret, insert or remove PDCP headers (in UL PDCP PDUs are decoded depending on SN_Size) - SS does not maintain PDCP sequence numbers and state variables

PDCP_TestModeConfig_Type

TTCN-3 Union Type		
Name	**PDCP_TestModeConfig_Type**	
Comment		
None	Null_Type	
Info	PDCP_TestModeInfo_Type	

PDCP_RbConfig_Type

TTCN-3 Union Type		
Name	**PDCP_RbConfig_Type**	
Comment		
Srb	Null_Type	for SRB1/2 there are no PDCP_Parameters; SN is always 5 bits
Drb	PDCP_Config_Type	PDCP-Configuration acc. to TS 36.331, clause 6.3.2; among others for UM here pdcp-SN-Size is configured to be either len7bits or len12bits; for AM it always is 12bit
Transparent	Null_Type	used for PDCP tests (TS 36.523-3, clause 4.2.1.3.2): the SS does not apply ciphering and does not maintain PDCP sequence numbers and state variables; in UL the PDCP PDUs are decoded acc. to the TestMode; Note: a reconfiguration of a RB from transparent mode to 'normal' mode is not foreseen (i.e. there is no mechanism to restore Ciphering, PDCP sequence numbers and state variables at the SS)

PDCP_ConfigInfo_Type

TTCN-3 Record Type			
Name	**PDCP_ConfigInfo_Type**		
Comment			
Rb	PDCP_RbConfig_Type	opt	mandatory for initial configuration; omit means "keep as it is"
TestMode	PDCP_TestModeConfig_Type	opt	mandatory for initial configuration; omit means "keep as it is"

PDCP_Configuration_Type

TTCN-3 Union Type		
Name	**PDCP_Configuration_Type**	
Comment		
None	Null_Type	for SRB0 no PDCP is configured; furthermore the PDCP may not be configured e.g. for DRBs tested in MAC test cases
Config	PDCP_ConfigInfo_Type	

D.1.5.2 RLC_Configuration

RLC configuration: radio bearer specific

RLC_Configuration: Basic Type Definitions

TTCN-3 Basic Types		
RLC_AM_SequenceNumber_Type	integer (0..1023)	RLC AM sequence number
SS_RLC_TM_Type	Null_Type	TM to configure SRB0; no parameters to be defined

RLC_ACK_Prohibit_Type

TTCN-3 Enumerated Type	
Name	**RLC_ACK_Prohibit_Type**
Comment	
Prohibit	cause SS RLC layer to stop any ACK transmission for UL PDU's received from UE
Continue	bring back the SS RLC in normal mode, where ACK/NACK are transmitted at polling

RLC_NotACK_NextRLC_PDU_Type

TTCN-3 Enumerated Type	
Name	**RLC_NotACK_NextRLC_PDU_Type**
Comment	
Start	cause SS RLC layer not to ACK the next received RLC PDU; this is done regardless of whether the poll bit is set or not; Example [from UMTS]: when the UE gets new security information in a SECURITY MODE COMMAND the response (SECURITY MODE COMPLETE) sent by the UE is not acknowledged at the RLC level; this causes the UE to continue using the "old" security information

RLC_TestModeInfo_Type

TTCN-3 Union Type		
Name	**RLC_TestModeInfo_Type**	
Comment		
AckProhibit	RLC_ACK_Prohibit_Type	valid only when the RLC is configured in AM
NotACK_NextRLC_PDU	RLC_NotACK_NextRLC_PDU_Type	valid only when the RLC is configured in AM
ModifyVTS	RLC_AM_SequenceNumber_Type	to modify the VT(S) at SS: VT(S) at the SS side is set to this (absolute) value; valid only when the RLC is configured in AM
TransparentMode_UMDwith5BitSN	Null_Type	shall be set when TTCN expects RLC PDUs as UMD in UL with an SN of 5 bits; valid only when the RLC is configured in TM
TransparentMode_UMDwith10BitSN	Null_Type	shall be set when TTCN expects RLC PDUs as UMD in UL with an SN of 10 bits; valid only when the RLC is configured in TM
TransparentMode_AMD	Null_Type	shall be set when TTCN expects RLC PDUs as AMD in UL; valid only when the RLC is configured in TM

RLC_TestModeConfig_Type

TTCN-3 Union Type		
Name	**RLC_TestModeConfig_Type**	
Comment		
None	Null_Type	
Info	RLC_TestModeInfo_Type	

SS_RLC_AM_Type

TTCN-3 Record Type			
Name	**SS_RLC_AM_Type**		
Comment			
Tx	UL_AM_RLC_Type	opt	the UE's UL setting to be used in SS's tx direction
Rx	DL_AM_RLC_Type	opt	the UE's DL setting to be used in SS's rx direction

SS_RLC_UM_Bi_Directional_Type

TTCN-3 Record Type			
Name	**SS_RLC_UM_Bi_Directional_Type**		
Comment			
Tx	UL_UM_RLC_Type	opt	the UE's UL setting to be used in SS's tx direction
Rx	DL_UM_RLC_Type	opt	the UE's DL setting to be used in SS's rx direction

SS_RLC_UM_Uni_Directional_UL_Type

TTCN-3 Record Type			
Name	**SS_RLC_UM_Uni_Directional_UL_Type**		
Comment			
Rx	DL_UM_RLC_Type	opt	the UE's DL setting to be used in SS's rx direction

SS_RLC_UM_Uni_Directional_DL_Type

TTCN-3 Record Type			
Name	**SS_RLC_UM_Uni_Directional_DL_Type**		
Comment			
Tx	UL_UM_RLC_Type	opt	the UE's UL setting to be used in SS's tx direction

RLC_RbConfig_Type

TTCN-3 Union Type		
Name	**RLC_RbConfig_Type**	
Comment		
AM	SS_RLC_AM_Type	
UM	SS_RLC_UM_Bi_Directional_Type	
UM_OnlyUL	SS_RLC_UM_Uni_Directional_UL_Type	
UM_OnlyDL	SS_RLC_UM_Uni_Directional_DL_Type	
TM	SS_RLC_TM_Type	normally SRB0 only; may be used for test purposes also

RLC_Configuration_Type

TTCN-3 Record Type			
Name	**RLC_Configuration_Type**		
Comment			
Rb	RLC_RbConfig_Type	opt	mandatory for initial configuration; omit means "keep as it is"
TestMode	RLC_TestModeConfig_Type	opt	mandatory for initial configuration; omit means "keep as it is"

D.1.5.3 MAC_Configuration

MAC configuration: radio bearer specific configuration

EUTRA_ASP_TypeDefs: Constant Definitions

TTCN-3 Basic Types			
tsc_MaxHarqRetransmission	integer	28	maximum value for maxHARQ-Msg3Tx as being signalled to the UE

MAC_Test_DLLogChID_Type

TTCN-3 Union Type		
Name	**MAC_Test_DLLogChID_Type**	
Comment		
LogChId	TestLogicalChannelId_Type	Specifies to over write the logical channel ID in MAC header in all the DL messages sent on the configured logical channel
ConfigLchId	Null_Type	Specifies that the normal mode of correct logical channel ID to be used in DL MAc header. This will be the default mode, when SS is initially configured.

MAC_Test_DL_SCH_CRC_Mode_Type

TTCN-3 Enumerated Type	
Name	**MAC_Test_DL_SCH_CRC_Mode_Type**
Comment	
Normal	default mode, the CRC generation is correct
Erroneous	SS shall generate CRC error by toggling CRC bits; the CRC error shall be applied for all PDUs of the given RNTI and their retransmission until SS is configured back to 'normal' operation
Error1AndNormal	the SS generates wrong CRC for first transmission and correct CRC on first retransmission. Later SS operates in normal mode. The retransmission is automatically triggered by reception of HARQ NACK

MAC_Test_SCH_NoHeaderManipulation_Type

TTCN-3 Enumerated Type	
Name	**MAC_Test_SCH_NoHeaderManipulation_Type**
Comment	
NormalMode	MAC header is fully controlled by the SS
DL_SCH_Only	TTCN can submit a final MAC PDU including header and payloads; SS does not do anything with this MAC PDU i.e. no header is added for the DL SCH transport channel. It is possible that data belonging to multiple DRBs is sent in one MAC PDU and from one special RB configured. NOTE: SRBs shall work as in normal mode and data can be sent/received on SRBs but sending on SRBs shall be in different TTIs than sending data PDUs.
DL_UL_SCH	In UL and DL the SS' MAC layer is transparent i.e. SS does not add or remove any MAC header

HARQ_ModeList_Type

TTCN-3 Record of Type	
Name	**HARQ_ModeList_Type**
Comment	
record length (1..tsc_MaxHarqRetransmission) of HARQ_Type	

PhichTestMode_Type

TTCN-3 Union Type		
Name	**PhichTestMode_Type**	
Comment		
NormalMode	Null_Type	PHICH is configured to operate in normal mode
ExplicitMode	HARQ_ModeList_Type	the number of elements in explicit list shall match the number of retransmissions being expected

MAC_TestModeInfo_Type

TTCN-3 Record Type			
Name	**MAC_TestModeInfo_Type**		
Comment	Parameters/Configuration for MAC tests		
DiffLogChId	MAC_Test_DLLogChID_Type		to be used in test cases 7.1.1.1 and 7.1.1.2 for using a different logical channel ID in MAC-header on DL-SCH channel
No_HeaderManipulation	MAC_Test_SCH_NoHeaderManipulation_Type		to configure mode for no header manipulation in SS MAC layer for DL/UL SCH

MAC_TestModeConfig_Type

TTCN-3 Union Type		
Name	**MAC_TestModeConfig_Type**	
Comment		
None	Null_Type	
Info	MAC_TestModeInfo_Type	

MAC_LogicalChannelConfig_Type

TTCN-3 Record Type			
Name	**MAC_LogicalChannelConfig_Type**		
Comment			
Priority	integer		logical channel priority for the DL as described in TS 36.321, clause 5.4.3.1 for the UL
PrioritizedBitRate	PrioritizedBitRate_Type		PBR as described for the UL; probably not needed at SS

MAC_Configuration_Type

TTCN-3 Record Type			
Name	**MAC_Configuration_Type**		
Comment			
LogicalChannel	MAC_LogicalChannelConfig_Type	opt	mandatory for initial configuration; omit means "keep as it is"
TestMode	MAC_TestModeConfig_Type	opt	mandatory for initial configuration; omit means "keep as it is"; for none MAC tests "TestMode.None:=true"

Radio_Bearer_Configuration: Basic Type Definitions

TTCN-3 Basic Types		
LogicalChannelId_Type	integer (0..10)	acc. TS 36.331, clause 6.3.2 for DRBs DTCH-LogicalChannelIdentity is INTEGER (3..10); additionally we have 0..2 for the SRBs
TestLogicalChannelId_Type	integer (0..31)	To be used in MAC test mode for reserved values of Logical channels;

RadioBearerConfigInfo_Type

TTCN-3 Record Type			
Name	**RadioBearerConfigInfo_Type**		
Comment	semantics of omit: "keep as it is"		
Pdcp	PDCP_Configuration_Type	opt	for SRB0: "Pdcp.None:=true" mandatory for initial configuration; omit means "keep as it is"
Rlc	RLC_Configuration_Type	opt	mandatory for initial configuration; omit means "keep as it is"
LogicalChannelId	LogicalChannelId_Type	opt	DRBs: DTCH-LogicalChannelIdentity as for rb-MappingInfo in DRB-ToAddModifyList; SRBs: for SRBs specified configurations acc. to TS 36.331, clause 9.1.2 shall be applied: SRB1: ul-LogicalChannel-Identity = dl-LogicalChannel-Identity = 1 SRB2: ul-LogicalChannel-Identity = dl-LogicalChannel-Identity = 2 for SRB0 being mapped to CCCH the LCID is '00000'B acc. to TS 36.321, clause 6.2.1; mandatory for initial configuration; omit means "keep as it is"
Mac	MAC_Configuration_Type	opt	

DiscardULData	boolean	opt	if omitted:
			initial configuration: data is handed over to TTCN as usual
			re-configuration: "keep as it is"
			if set:
			true - SS shall discard any data in UL for this radio bearer
			false - (re)configuration back to normal mode
			NOTE: typically applicable for UM DRBs only

RadioBearerConfig_Type

TTCN-3 Union Type		
Name	**RadioBearerConfig_Type**	
Comment		
AddOrReconfigure	RadioBearerConfigInfo_Type	add / re-configure RB - CellId : identifier of the cell being configured RoutingInfo : None TimingInfo : 'Now' in common cases ControlInfo : CnfFlag:=true; FollowOnFlag:=false (in general)
Release	Null_Type	release RB - CellId : identifier of the cell being configured RoutingInfo : None TimingInfo : 'Now' in common cases ControlInfo : CnfFlag:=true; FollowOnFlag:=false (in general)

RadioBearer_Type

TTCN-3 Record Type			
Name	**RadioBearer_Type**		
Comment			
Id	RadioBearerId_Type		either for SRB or DRB
Config	RadioBearerConfig_Type		

RadioBearerList_Type

TTCN-3 Record of Type	
Name	**RadioBearerList_Type**
Comment	array of SRBs and/or DRBs (DRBs + 3 SRBs)
record length (1..tsc_MaxRB) of RadioBearer_Type	

D.1.6 AS_Security

Primitive for control of AS security

PdcpSQN_Type

TTCN-3 Record Type			
Name	**PdcpSQN_Type**		
Comment			
Format	PdcpCountFormat_Type		5 bit, 7 bit or 12 bit SQN
Value	integer		SQN value (5 bit, 7 bit or 12 bit SQN) NOTE: in TTCN the test case writer is responsible to deal with potential overflows (e.g. there shall be a "mod 32", "mod 128" or "mod 4096" according to the format)

PDCP_ActTime_Type

TTCN-3 Union Type		
Name	**PDCP_ActTime_Type**	
Comment	The sequence number in UL and DL for SRB1 should be one more than the present SQN, as Ciphering starts in UL and DL soon after SMC and SMComp; For other SRB/DRB it should be the present SQN.	
None	Null_Type	No Activation time; to be used if Ciphering is not applied
SQN	PdcpSQN_Type	PDCP sequence number

SecurityActTime_Type

TTCN-3 Record Type			
Name	**SecurityActTime_Type**		
Comment			
RadioBearerId	RadioBearerId_Type		
UL	PDCP_ActTime_Type		
DL	PDCP_ActTime_Type		

SecurityActTimeList_Type

TTCN-3 Record of Type	
Name	**SecurityActTimeList_Type**
Comment	
record length (1..tsc_MaxRB) of SecurityActTime_Type	

AS_IntegrityInfo_Type

TTCN-3 Record Type			
Name	**AS_IntegrityInfo_Type**		
Comment	for initial configuration activation time is not needed for integrity protection as all messages in DL after security activation are integrity protected; this means this ASP is invoked before transmission of Security mode command; if there is a integrity violation in UL SS shall set the IndicationStatus in the common ASP part to flag the integrity error (IndicationStatus.Error.Integrity.Pdcp := true); integrity to be provided for each SRB as per core spec		
Algorithm	IntegrityProtAlgorithm_Type		IntegrityProtAlgorithm_Type being defined in RRC ASN.1
KRRCint	B128_Key_Type		
ActTimeList	SecurityActTimeList_Type	opt	omit for initial configuration (i.e. all SRBs to be integrity protected immediately); in HO scenarios activation time may be needed e.g. for SRB1

AS_CipheringInfo_Type

TTCN-3 Record Type			
Name	**AS_CipheringInfo_Type**		
Comment			
Algorithm	CipheringAlgorithm_Type		CipheringAlgorithm_Type being defined in RRC ASN.1
KRRCenc	B128_Key_Type		
KUPenc	B128_Key_Type		KUPenc is mandatory; and SS uses it when DRB are configured
ActTimeList	SecurityActTimeList_Type		

AS_SecStartRestart_Type

TTCN-3 Record Type			
Name	**AS_SecStartRestart_Type**		
Comment			
Integrity	AS_IntegrityInfo_Type	opt	optional to allow separated activation of integrity and ciphering; omit: keep as it is
Ciphering	AS_CipheringInfo_Type	opt	optional to allow separated activation of integrity and ciphering; omit: keep as it is

AS_Security_Type

TTCN-3 Union Type		
Name	**AS_Security_Type**	
Comment	Security mode command procedure (TS 36.331, clause 5.3.4): both SMC and SMComp are integrity protected (nevertheless SS shall be able to cope with unprotected SM reject); ciphering is started just after SMComp (acc. to TS 36.331, clause 5.3.4.3 and 5.3.1.1)	
StartRestart	AS_SecStartRestart_Type	information to start/restart AS security protection in the PDCP
Release	Null_Type	to release AS security protection in the PDCP

D.1.7 Semi_Persistent_Scheduling

Semi-persistent scheduling (SPS)
NOTE 1:
configuration of SPS cannot be done completely in advance but needs to be activated by PDCCH signalling
=> SPS is configured/activated in an own primitive which may be sent to SS during RBs are being configured
NOTE 2:
semi-persistent (configured) scheduling is per UE (as well as 'normal' scheduling; see e.g. TS 36.300, clause 11.1)

SpsAssignmentUL_Type

TTCN-3 Record Type			
Name	**SpsAssignmentUL_Type**		
Comment	information to assign semi-persistent schedules in UL		
DciInfo	DciUlInfo_Type	opt	to apply a grant
SchedulInterval	SpsConfigurationUL_Type	opt	as in TS 36.331, clause 6.3.2 SPS-ConfigUL
SetNDI_1	Null_Type	opt	if present then NDI is set as 1 indicating a retransmission; If absent then NDI is set as 0 indicating a new transmission

SpsAssignmentDL_Type

TTCN-3 Record Type			
Name	**SpsAssignmentDL_Type**		
Comment	information to assign semi-persistent schedules in DL		
DciInfo	DciDlInfo_Type	opt	to apply a assignment
SchedulInterval	SpsConfigurationDL_Type	opt	as in TS 36.331, clause 6.3.2 SPS-ConfigDL
SetNDI_1	Null_Type	opt	if present then NDI is set as 1 indicating a retransmission; If absent then NDI is set as 0 indicating a new transmission

SpsActivateInfo_Type

TTCN-3 Record Type			
Name	**SpsActivateInfo_Type**		
Comment	Semi-persistent scheduling (SPS): Even though SPS is pre-configured at the UE (e.g. RRCConnectionSetup->RadioResourceConfiguration->MAC_MainConfig) it needs to be activated by L1 signalling => SS shall 'activate' SPS by sending appropriate assignments/grants to the UE; this shall be done with an activation time. If SPS is already configured and new Activate command is received, at the activation time SS locally deactivates old SPS configuration, sends UE an PDCCH assignment for new SPS assignment and locally activates new SPS configuration. In DL, in addition to SS SPS assignment configuration with activation time 'T', TTCN writer shall also schedule a DL MAC PDU with same activation time 'T' and at every SPS ScheduleInterval (NOTE: in general it is an error when TTCN does not provide data for a SchedulInterval; SS shall send no data in this case). Special fields of PDCCH assignment are filled as per table 9.2-1 of 36.213		
SPS_C_RNTI	C_RNTI		SPS C-RNTI as signalled to UE
UplinkGrant	SpsAssignmentUL_Type	opt	
DownlinkAssignment	SpsAssignmentDL_Type	opt	

SpsPdcchRelease_Type

TTCN-3 Record Type			
Name	**SpsPdcchRelease_Type**		
Comment	On reception of this information SS shall send an SPS release indicated by PDCCH transmission with indicated DCI format (0 or 1A) at the activation time. Special fields of PDCCH assignment are filled as per table 9.2-1A of 36.213		
SPS_C_RNTI	C_RNTI		
DCI_Format	PdcchDciFormat_Type		only formats 0 (UL release) and 1A (DL release) are applicable. It is a TTCN error if any other formats are used.

SpsDeactivateInfo_Type

TTCN-3 Union Type		
Name	**SpsDeactivateInfo_Type**	
Comment		
LocalRelease	Null_Type	SPS configuration shall be released at the SS, that means as well that the SS shall not address SPS_C_RNTI anymore from the given TimingInfo onward; NOTE: there is no SPS release to be signalled on PDCCH (this is done with PdcchExplicitRelease - see below)
PdcchExplicitRelease	SpsPdcchRelease_Type	SS transmits PDCCH content indicating SPS release but holds the local SPS configuration until it is locally released

SpsConfig_Type

TTCN-3 Union Type		
Name	**SpsConfig_Type**	
Comment		
Activate	SpsActivateInfo_Type	CellId : identifier of the cell where the UE is active RoutingInfo : None TimingInfo : activation time for SPS assignment/grant transmission; NOTE: the first SPS DL data packet shall be sent with the same timing information ControlInfo : CnfFlag:=false; FollowOnFlag:=false
Deactivate	SpsDeactivateInfo_Type	CellId : identifier of the cell where the UE is active RoutingInfo : None TimingInfo : activation time for SPS release indicated by PDCCH transmission or SS local deactivation ControlInfo : CnfFlag:=false; FollowOnFlag:=false

D.1.8 Paging_Trigger

SubframeOffsetList_Type

TTCN-3 Record of Type	
Name	**SubframeOffsetList_Type**
Comment	
record length (1..infinity) of integer	

PagingTrigger_Type

TTCN-3 Record Type			
Name	**PagingTrigger_Type**		
Comment	CellId : identifier of the cell where the UE is active RoutingInfo : None TimingInfo : Calculated paging occasion ControlInfo : CnfFlag:=false; FollowOnFlag:=false primitive to trigger transmission of a paging on the PCCH at a calculated paging occasion (TS 36.304, clause 7); the paging occasion is calculated by TTCN and activation time is applied; as for BCCH Infor acc. to TS 36.331, clause 9.1.1.3 "RRC will perform padding, if required due to the granularity of the TF signalling, as defined in 8.5."; therefore this needs to be done by the system simulator		
Paging	PCCH_Message		paging to be send out at paging occasion and being announced on PDCCH using P-RNTI
SubframeOffsetList	SubframeOffsetList_Type	opt	list of subframe offsets relative to the absolute timing information given in the common part of the ASP; if present, multiple pagings are sent out at all occasions given by the list; if omitted only a single paging is sent at the occasion given timing information given in the common part of the ASP

D.1.9 L1_MAC_Indication_Control

Primitive for control of L1/MAC indication for special purposes

L1Mac_IndicationMode_Type

TTCN-3 Enumerated Type	
Name	**L1Mac_IndicationMode_Type**
Comment	
enable	
disable	

L1Mac_IndicationControl_Type

TTCN-3 Record Type			
Name	**L1Mac_IndicationControl_Type**		
Comment	NOTE: Initially all indications are disabled in SS (i.e. it shall not be necessary in 'normal' test cases to use this primitive but only if a specific indication is needed); omit means indication mode is not changed		
RachPreamble	L1Mac_IndicationMode_Type	opt	To enable/disable reporting of PRACH preamble received.
SchedReq	L1Mac_IndicationMode_Type	opt	To enable/disable reporting of reception of Scheduling Request on PUCCH.
BSR	L1Mac_IndicationMode_Type	opt	To enable/disable reporting of Buffer/Extended Buffer Status Report. NOTE: this is applicable only when MAC is configured in normal mode in UL; MAC configured in test mode, results in over writing the report.
UL_HARQ	L1Mac_IndicationMode_Type	opt	To enable/disable reporting of reception of HARQ ACK/NACK.
C_RNTI	L1Mac_IndicationMode_Type	opt	To enable/disable reporting of C-RNTI sent by the UE within MAC PDU
PHR	L1Mac_IndicationMode_Type	opt	To enable/disable reporting of Power Headroom Report. NOTE: this is applicable only when MAC is configured in normal mode in UL; MAC configured in test mode, results in over writing the report.
HarqError	L1Mac_IndicationMode_Type	opt	To enable/disable reporting of HARQ errors
PeriodicRI	L1Mac_IndicationMode_Type	opt	To enable/disable reporting of reception of periodic Rank Indicators
EPHR	L1Mac_IndicationMode_Type	opt	To enable/disable reporting of Extended Power Headroom Report. NOTE: this is applicable only when MAC is configured in normal mode for UL; MAC configured in test mode, results in overwriting the report.
PeriodicCQI	L1Mac_IndicationMode_Type	opt	To enable/disable reporting of reception of periodic CQI

D.1.10 Rlc_Indication_Control

Primitive for control of RLC indication for special purposes

Rlc_IndicationMode_Type

TTCN-3 Enumerated Type	
Name	**Rlc_IndicationMode_Type**
Comment	
enable	
disable	

Rlc_IndicationControl_Type

TTCN-3 Record Type			
Name	**Rlc_IndicationControl_Type**		
Comment			
Discard	Rlc_IndicationMode_Type	opt	To enable/disable reporting of discarded RLC PDUs

D.1.11 PDCP_Count

Primitives to enquire PDCP COUNT

PDCP_Count: Basic Type Definitions

TTCN-3 Basic Types		
PdcpCountValue_Type	B32_Type	

PdcpCountFormat_Type

TTCN-3 Enumerated Type	
Name	**PdcpCountFormat_Type**
Comment	
PdcpCount_Srb	27 bit HFN; 5 bit SQF
PdcpCount_DrbLongSQN	20 bit HFN; 12 bit SQF
PdcpCount_DrbShortSQN	25 bit HFN; 7 bit SQF

PdcpCount_Type

TTCN-3 Record Type			
Name	**PdcpCount_Type**		
Comment			
Format	PdcpCountFormat_Type		
Value	PdcpCountValue_Type		

PdcpCountInfo_Type

TTCN-3 Record Type			
Name	**PdcpCountInfo_Type**		
Comment			
RadioBearerId	RadioBearerId_Type		
UL	PdcpCount_Type	opt	omit: keep as it is
DL	PdcpCount_Type	opt	omit: keep as it is

PdcpCountInfoList_Type

TTCN-3 Record of Type	
Name	**PdcpCountInfoList_Type**
Comment	
record length (1..tsc_MaxRB) of PdcpCountInfo_Type	

PdcpCountGetReq_Type

TTCN-3 Union Type		
Name	**PdcpCountGetReq_Type**	
Comment		
AllRBs	Null_Type	return COUNT values for all RBs being configured
SingleRB	RadioBearerId_Type	

PDCP_CountReq_Type

TTCN-3 Union Type		
Name	**PDCP_CountReq_Type**	
Comment		
Get	PdcpCountGetReq_Type	Request PDCP count for one or all RBs being configured at the PDCP
Set	PdcpCountInfoList_Type	Set PDCP count for one or all RBs being configured at the PDCP; list for RBs which's COUNT shall be manipulated

PDCP_CountCnf_Type

TTCN-3 Union Type		
Name	**PDCP_CountCnf_Type**	
Comment		
Get	PdcpCountInfoList_Type	RBs in ascending order; SRBs first
Set	Null_Type	

D.1.12 PDCP_Handover

Primitives to control PDCP regarding handover

PDCP_HandoverInit_Type

TTCN-3 Record Type			
Name	**PDCP_HandoverInit_Type**		
Comment			
SourceCellId	EUTRA_CellId_Type		

PDCP_HandoverControlReq_Type

TTCN-3 Union Type		
Name	**PDCP_HandoverControlReq_Type**	
Comment		
HandoverInit	PDCP_HandoverInit_Type	to inform SS that a handover will follow: in the common ASP part the CellId shall be set to the id of the target cell
HandoverComplete	Null_Type	to inform SS that the handover has successfully been performed by the UE; this shall trigger the SS to sent a PDCP Status Report to the UE; in the common ASP part the CellId shall be set to the id of the target cell

D.1.13 L1_MAC_Test_Mode

Primitive for control of L1/MAC Test Modes

L1_TestMode_Type

TTCN-3 Record Type			
Name	**L1_TestMode_Type**		
Comment	L1 test mode; in general RACH is handled separately		
DL_SCH_CRC	DL_SCH_CRC_Type		Manipulation of CRC bit generation for DL-SCH
Phich	PhichTestMode_Type		HARQ feedback mode on the PHICH

DL_SCH_CRC_Type

TTCN-3 Union Type		
Name	**DL_SCH_CRC_Type**	
Comment	NOTE: CRC error mode for RA_RNTI is not addressed as it will be configured in RACHProcedureConfig	
C_RNTI	MAC_Test_DL_SCH_CRC_Mode_Type	to configure mode for CRC bit for all MAC PDU's for which C-RNTI is used in PDCCH transmission
SI_RNTI	MAC_Test_DL_SCH_CRC_Mode_Type	to configure mode for CRC bit for all MAC PDU's for which SI-RNTI is used in PDCCH transmission
SPS_RNTI	MAC_Test_DL_SCH_CRC_Mode_Type	to configure mode for CRC bit for all MAC PDU's for which SPS-RNTI is used in PDCCH transmission

D.1.14 PDCCH_Order

Primitive to trigger SS to send PDCCH order to initiate RA procedure (TS 36.321, clause 5.1.1)

PDCCH_Order: Basic Type Definitions

TTCN-3 Basic Types		
PrachPreambleIndex_Type	Ra_PreambleIndex_Type	
PrachMaskIndex_Type	integer (0..15)	TS 36.321, clause 7.3

RA_PDCCH_Order_Type

TTCN-3 Record Type			
Name	**RA_PDCCH_Order_Type**		
Comment	see also TS 36.212, clause 5.3.3.1.3		
PreambleIndex	PrachPreambleIndex_Type		naming acc. TS 36.212, clause 5.3.3.1.3
PrachMaskIndex	PrachMaskIndex_Type		naming acc. TS 36.212, clause 5.3.3.1.3

D.1.15 System_Indications

Primitives for System indications

System_Indications: Basic Type Definitions

TTCN-3 Basic Types		
PRTPower_Type	Dummy_Type	needs to define appropriately the power level report of PREAMBLE_RECEIVED_TARGET_POWER; NOTE: for the time being this is just a place holder for enhancements in the future.
LogicalChannelGroup_Type	integer (0..3)	
BSR_Value_Type	integer (0..63)	
PHR_Type	integer (0..63)	
RI_Type	integer (1..4)	Rank indicator reported acc. to TS 36.212 Table 5.2.2.6-6

HarqProcessInfo_Type

TTCN-3 Record Type			
Name	**HarqProcessInfo_Type**		
Comment			
Id	HarqProcessId_Type		
CURRENT_TX_NB	integer		acc. to TS 36.321 clause 5.4.2.2

HarqError_Type

TTCN-3 Union Type		
Name	**HarqError_Type**	
Comment		
UL	HarqProcessInfo_Type	indicates HARQ error detected at the SS side (error at UL transmission)
DL	HarqProcessInfo_Type	indicates HARQ NACK sent by the UE (error at DL transmission)

RachPreamble_Type

TTCN-3 Record Type			
Name	**RachPreamble_Type**		
Comment			
RAPID	PrachPreambleIndex_Type		indicates the RAPID of the preamble used (integer (0..63))
PRTPower	PRTPower_Type		represents the PREAMBLE_RECEIVED_TARGET_POWER

Short_BSR_Type

TTCN-3 Record Type			
Name	**Short_BSR_Type**		
Comment			
LCG	LogicalChannelGroup_Type		Logical channel Group
Value	BSR_Value_Type		BSR or Extended BSR value

Long_BSR_Type

TTCN-3 Record Type			
Name	**Long_BSR_Type**		
Comment			
Value_LCG1	BSR_Value_Type		BSR or Extended BSR value for LCG 1
Value_LCG2	BSR_Value_Type		BSR or Extended BSR value for LCG 2
Value_LCG3	BSR_Value_Type		BSR or Extended BSR value for LCG 3
Value_LCG4	BSR_Value_Type		BSR or Extended BSR value for LCG 4

BSR_Type

TTCN-3 Union Type		
Name	**BSR_Type**	
Comment		
Short	Short_BSR_Type	
Truncated	Short_BSR_Type	
Long	Long_BSR_Type	

HARQ_Type

TTCN-3 Enumerated Type	
Name	**HARQ_Type**
Comment	ack represents HARQ ACK; nack represents HARQ_NACK
ack	
nack	

RlcDiscardInd_Type

TTCN-3 Record Type			
Name	**RlcDiscardInd_Type**		
Comment	SS shall send this indication if it discards a received RLC AMD PDU as specified in TS 36.322 cl. 5.1.3.2.2.		
SequenceNumber	integer		sequence number of the PDU being discarded

D.1.16 System_Interface

SYSTEM_CTRL_REQ

TTCN-3 Record Type			
Name	**SYSTEM_CTRL_REQ**		
Comment			
Common	ReqAspCommonPart_Type		TimingInfo depends on respective primitive:
Request	SystemRequest_Type		- Cell TimingInfo: 'now' (in general) - CellAttenuationList TimingInfo: 'now' (in general, but activation time may be used also) - RadioBearerList TimingInfo: 'now' in general; activation time may be used in special case for release and/or reconfiguration of one or several RBs; the following rules shall be considered: - release/Reconfiguration of an RB shall not be scheduled ealier than 5ms after a previous data transmission on this RB - subsequent release and reconfiguration(s) shall be scheduled with an interval of at least 5ms - a subsequent data transmission on an RB shall not be scheduled ealier than 5ms after the last reconfiguration of the RB the configuration shall be performed exactly at the given time - EnquireTiming TimingInfo: 'now' - AS_Security TimingInfo: 'now'; NOTE: "activation time" may be specified in the primitive based on PDCP SQN - Sps TimingInfo: activation time for SPS assignment transmission - Paging TimingInfo: Calculated paging occassion - L1MacIndCtrl TimingInfo: 'now' (in general) - PdcpCount TimingInfo: 'now' (in general) activation time may be used in case of CA inter cell handover to set the PdcpCount - L1_TestMode TimingInfo: depends on the test mode; activation time is used e.g. for manipulation of the CRC - PdcchOrder TimingInfo: 'now' (in general)

SYSTEM_CTRL_CNF

TTCN-3 Record Type			
Name	**SYSTEM_CTRL_CNF**		
Comment			
Common	CnfAspCommonPart_Type		TimingInfo is ignored by TTCN (apart from EnquireTiming) => SS may set TimingInfo to "None"
Confirm	SystemConfirm_Type		

SYSTEM_IND

TTCN-3 Record Type			
Name	**SYSTEM_IND**		
Comment			
Common	IndAspCommonPart_Type		The SS shall provide TimingInfo (SFN + subframe number) depending on the respective indication:
Indication	SystemIndication_Type		- Error/HarqError TimingInfo: related to the error (if available) - RachPreamble TimingInfo: shall indicate start of the RACH preamble - SchedReq TimingInfo: subframe containing the SR - BSR TimingInfo: subframe in which the MAC PDU contains the BSR - UL_HARQ TimingInfo: subframe containing the UL HARQ - C_RNTI TimingInfo: subframe in which the MAC PDU contains the C_RNTI - PHR TimingInfo: subframe in which the MAC PDU contains the PHR

EUTRA_SYSTEM_PORT

TTCN-3 Port Type		
Name	**EUTRA_SYSTEM_PORT**	
Comment	EUTRA PTC: Port for system configuration	
out	SYSTEM_CTRL_REQ	
in	SYSTEM_CTRL_CNF	

EUTRA_SYSIND_PORT

TTCN-3 Port Type		
Name	**EUTRA_SYSIND_PORT**	
Comment	EUTRA PTC: Port for system indications	
in	SYSTEM_IND	

D.1.17 MBMS_Configuration

EUTRA_ASP_TypeDefs: Constant Definitions

TTCN-3 Basic Types			
tsc_MaxMRB	integer	32	maximum MRB used in test cases - Value arbitrarily set to 32 (5bits) Theorically the maximum value is maxPMCH-PerMBSFN * maxSessionPerPMCH i.e. 15*29

MBMS_Config_Type

TTCN-3 Record Type			
Name	**MBMS_Config_Type**		
Comment	all fields are optional to allow single modifications; activation time is applied in the common part of the ASP		
Mbsfn_SubframeConfigList	MBSFN_SubframeConfigList	opt	Configure subframes reserved for MBSFN
MbsfnAreaList	MbsfnAreaList_Type	opt	Configure all MBSFN areas

MbsfnAreaList_Type

TTCN-3 Record of Type	
Name	**MbsfnAreaList_Type**
Comment	
record length(1..maxMBSFN_Area) of MbsfnArea_Type	

MbsfnArea_Type

TTCN-3 Record Type			
Name	**MbsfnArea_Type**		
Comment			
Mbsfn_AreaInfo	MBSFN_AreaInfo_r9	opt	Configure MCCH scheduling acc. to TS 36. 331 cl 9.1.1.4 there is no PDCP and MCCH use the RLC-UM mode configuration/scheduling and contents of the MCCH Information is done in one go (i.e. there are no separate ports for MCCH data and configuration)
McchData	MCCH_Data_Type	opt	MCCH information to be broadcasted
MbsfnAreaConfiguration	MBSFNAreaConfiguration_r9	opt	Configuration parameters for CommonCSA/PMCH/MTCH
MRB_List	MRB_List_Type	opt	Configure/release MTCH MRBs

MCCH_Data_Type

TTCN-3 Record Type			
Name	**MCCH_Data_Type**		
Comment			
Mbsfn_AreaId	Mbsfn_AreaId_r9_Type	opt	Used only for modification of MCCH info. Omitted if Mbsfn_AreaInfo is present and mandatory present otherwise
MsgList	MCCH_MessageList_Type		

MCCH_MessageList_Type

TTCN-3 Record of Type	
Name	**MCCH_MessageList_Type**
Comment	Includes mbsfnAreaConfiguration-r9 and optionally mbmsCountingRequest-r10.
record length(1..2) of MCCH_Message	

MRB_List_Type

TTCN-3 Record of Type	
Name	**MRB_List_Type**
Comment	
record length(1.. tsc_MaxMRB) of MRB_Type	

MRB_Type

TTCN-3 Record Type			
Name	**MRB_Type**		
Comment			
PmchLogicalChannel	PmchLogicalChannel_Type		
Config	MTCH_Config_Type	opt	present for MRB_COMMON_REQ for MTCH data scheduling; not present for SystemRequest_Type MSI_Conf

MSI_Config_Type

TTCN-3 Union Type		
Name	**MSI_Config_Type**	
Comment		
None	Null_Type	no MSI MCE included
Auto	MSI_MCE_Type	SS automatically includes configured MSI in the first subframes allocated to the MCH within the MCH scheduling period

MSI_Type

TTCN-3 Recor
Name
Comment
LchID
StopMTCH

MSI_MCE_Type

TTCN-3 Recor
Name
Comment
record of MSI_

MTCH_Config_Type

TTCN-3 Union		
Name		
Comment		
AddOrReconfigure	MTCH_ConfigInfo_Type	Add/reconfigure RB - CellId : identifier of the cell being configured RoutingInfo: none TimingInfo : 'Now' in common cases ControlInfo: CnfFlag:=true; FollowOnFlag:=false (in general)
Release	Null_Type	release RB - CellId : identifier of the cell being configured RoutingInfo : none TimingInfo : 'Now' in common cases ControlInfo : CnfFlag:=true; FollowOnFlag:=false (in general)

MTCH_ConfigInfo_Type

TTCN-3 Record Type			
Name	**MTCH_ConfigInfo_Type**		
Comment	Acc. to TS 36. 331 cl 9.1.1.4 there is no PDCP and MTCH use the RLC-UM mode		
Rlc	RLC_Configuration_Type	opt	Mandatory for initial configuration; omit means "keep as it is" Note RLC DL only UM mode with SN 5 bits is only valid
Mac	MAC_MCH_TestModeConfig_Type	opt	

MAC_MCH_TestModeConfig_Type

TTCN-3 Union Type		
Name	**MAC_MCH_TestModeConfig_Type**	
Comment		
None	Null_Type	MAC operation in normal mode for MCH
Config	Null_Type	MAC is configured in no header manipulation in DL [MTCH is DL only channel] - FFS

PDCCH_MCCH_ChangeNotification_Type

TTCN-3 Record Type			
Name	**PDCCH_MCCH_ChangeNotification_Type**		
Comment			
NotificationIndicator_r9	NotificationIndicator_r9_Type		
SubframeOffsetList	SubframeOffsetList_Type	opt	list of subframe offsets relative to the absolute timing information given in the common part of the ASP; if present, multiple MCCH Change Notifications are sent out at all occasions given by the list; if omitted only a single MCCH Change Notifications is sent at the occasion given timing information given in the common part of the ASP

PmchConfig_Type

TTCN-3 Record Type			
Name	**PmchConfig_Type**		
Comment			
RelativeTxPower	ToRS_EPRE_Ratios_Type	opt	power ratio for PMCH's resource elements relative to the RS

D.2 EUTRA_ASP_DrbDefs

ASP interface for DRBs

D.2.1 PDU_TypeDefs

D.2.1.1 MAC_PDU

MAC_PDU: Basic Type Definitions

TTCN-3 Basic Types		
MAC_CTRL_C_RNTI_Type	C_RNTI	TS 36.321, clause 6.1.3.2
MAC_CTRL_ContentionResolutionId_Type	ContentionResolutionId_Type	TS 36.321, clause 6.1.3.4 fix 48-bit size; consists of a single field defined UE Contention Resolution Identity (uplink CCCH SDU transmitted by MAC)
MAC_CTRL_TimingAdvance_Type	B8_Type	TS 36.321, clause 6.1.3.5 indicates the amount of timing adjustment in 0.5 ms that the UE has to apply; the length of the field is [8] bits
MAC_SDU_Type	octetstring	

MAC_PDU_Length_Type

TTCN-3 Record Type			
Name	**MAC_PDU_Length_Type**		
Comment	NOTE: since F and L field are either both present or both omitted they are put into this record; to allow homogeneous (direct) encoding the PDU length is not defined as union; TTCN-3 does allow length restrictions to one lenght or a range of length but not to two specific lengthes; further restriction may be achieved by appropriate templates (parameter either 7 or 15 bit)		
Format	B1_Type		F: The Format field indicates the size of the Length field as indicated in table 6.2.1-3. There is one F field per MAC PDU subheader except for the last subheader and sub-headers corresponding to fixed-sized MAC control elements. The size of the F field is 1 bit. If the size of the MAC SDU or MAC control element is less than 128 bytes, the UE shall set the value of the F field to 0, otherwise the UE shall set it to 1
Value	B7_15_Type		L: The Length field indicates the length of the corresponding MAC SDU or MAC control element in bytes. There is one L field per MAC PDU subheader except for the last subheader and sub-headers corresponding to fixed-sized MAC control elements. The size of the L field is indicated by the F field

MAC_PDU_SubHeader_Type

TTCN-3 Record Type			
Name	**MAC_PDU_SubHeader_Type**		
Comment			
Reserved	B2_Type		Reserved bits
Extension	B1_Type		E: The Extension field is a flag indicating if more fields are present in the MAC header or not. The E field is set to "1" to indicate another set of at least R/R/E/LCID fields. The E field is set to "0" to indicate that either a MAC SDU, a MAC control element or padding starts at the next byte
LCID	B5_Type		LCID: The Logical Channel ID field identifies the logical channel instance of the corresponding MAC SDU or the type of the corresponding MAC control element or padding as described in tables 6.2.1-1 and 6.2.1-2 for the DL and UL-SCH respectively. There is one LCID field for each MAC SDU, MAC control element or padding included in the MAC PDU. The LCID field size is 5 bits; NOTE: In case of DRX command the sub-header corresponds to a control element of length zero (i.e. there is no control element)
Length	MAC_PDU_Length_Type	opt	

MAC_Header_Type

TTCN-3 Record of Type	
Name	**MAC_Header_Type**
Comment	
record of MAC_PDU_SubHeader_Type	

MAC_CTRL_ShortBSR_Type

TTCN-3 Record Type			
Name	**MAC_CTRL_ShortBSR_Type**		
Comment	TS 36.321, clause 6.1.3.1		
LCG	B2_Type		
Value	B6_Type		

MAC_CTRL_LongBSR_Type

TTCN-3 Record Type			
Name	**MAC_CTRL_LongBSR_Type**		
Comment	TS 36.321, clause 6.1.3.1		
Value_LCG1	B6_Type		
Value_LCG2	B6_Type		
Value_LCG3	B6_Type		
Value_LCG4	B6_Type		

MAC_CTRL_PowerHeadRoom_Type

TTCN-3 Record Type			
Name	**MAC_CTRL_PowerHeadRoom_Type**		
Comment	TS 36.321, clause 6.1.3.6		
Reserved	B2_Type		
Value	B6_Type		

MAC_CTRL_ElementList_Type

TTCN-3 Set Type			
Name	**MAC_CTRL_ElementList_Type**		
Comment	NOTE 1: for simplicication UL and DL are not distiguished even though the control elements are either UL or DL NOTE 2: type is defined as set: the ordering is not significant; nevertheless the ordering is well-defined by the sub-headers; for codec implementations it is in any case necessary to evaluate the sub-header information in order to encode/decode the payload		
ShortBSR	MAC_CTRL_ShortBSR_Type	opt	UL only
LongBSR	MAC_CTRL_LongBSR_Type	opt	UL only
C_RNTI	MAC_CTRL_C_RNTI_Type	opt	UL only
ContentionResolutionID	MAC_CTRL_ContentionResolutionId_Type	opt	DL only
TimingAdvance	MAC_CTRL_TimingAdvance_Type	opt	DL only
PowerHeadRoom	MAC_CTRL_PowerHeadRoom_Type	opt	UL only
ScellActDeact	MAC_CTRL_ScellActDeact_Type	opt	DL only
ExtPowerHeadRoom	MAC_CTRL_ExtPowerHeadRoom_Type	opt	UL only. Only one among PowerHeadroom and ExtPowerHeadroom may be present

MAC_SDUList_Type

TTCN-3 Record of Type	
Name	**MAC_SDUList_Type**
Comment	
record of MAC_SDU_Type	

MAC_PDU_Type

TTCN-3 Record Type			
Name	**MAC_PDU_Type**		
Comment			
Header	MAC_Header_Type		list of MAC PDU SubHeaders corresponding to MAC control elements and MAC SDUs
CtrlElementList	MAC_CTRL_ElementList_Type	opt	Mac control elements; acc. to TS 36.321, clause 6.1.2 "MAC control elements, are always placed before any MAC SDU."
SduList	MAC_SDUList_Type	opt	MAC SDUs, which can typically be RLC PDUs
Padding	octetstring	opt	Octet aligned Padding if more than or equal to 2 bytes

MAC_PDUList_Type

TTCN-3 Record of Type	
Name	**MAC_PDUList_Type**
Comment	
record of MAC_PDU_Type	

D.2.1.2 RLC_PDU

D.2.1.2.1 Common

RLC PDU definition: common AM/UM field definitions

Common: Basic Type Definitions

TTCN-3 Basic Types		
RLC_FramingInfo_Type	B2_Type	00 - First byte of the Data field corresponds to the first byte of a RLC SDU. Last byte of the Data field corresponds to the last byte of a RLC SDU. 01 - First byte of the Data field corresponds to the first byte of a RLC SDU. Last byte of the Data field does not correspond to the last byte of a RLC SDU. 10 - First byte of the Data field does not correspond to the first byte of a RLC SDU. Last byte of the Data field corresponds to the last byte of a RLC SDU. 11 - First byte of the Data field does not correspond to the first byte of a RLC SDU. Last byte of the Data field does not correspond to the last byte of a RLC SDU.

RLC_LengthIndicator_Type

TTCN-3 Record Type			
Name	**RLC_LengthIndicator_Type**		
Comment			
Extension	B1_Type		0 - Data field follows from the octet following the LI field following this E field 1 - A set of E field and LI field follows from the bit following the LI field following this E field
LengthIndicator	B11_Type		Length Indicator

RLC_LI_List_Type

TTCN-3 Record of Type	
Name	**RLC_LI_List_Type**
Comment	
record of RLC_LengthIndicator_Type	

RLC_PDU_Header_FlexPart_Type

TTCN-3 Record Type			
Name	**RLC_PDU_Header_FlexPart_Type**		
Comment	Flexible part of the header with a number of K LIs		
LengthIndicator	RLC_LI_List_Type		List of E, LI fields
Padding	B4_Type	opt	optional 4 bit padding present in case of odd number of LI's

D.2.1.2.2 TM_Data

RLC PDU definition: UM (TS 36.322, clause 6.2.1.2)

TM_Data: Basic Type Definitions

TTCN-3 Basic Types		
RLC_TMD_PDU_Type	octetstring	TS 36.322, clause 6.2.1.2

D.2.1.2.3 UM_Data

RLC PDU definition: UM (TS 36.322, clause 6.2.1.3)
NOTE:
To allow direct encoding the definition for RLC UM Data PDU is split into data PDU with 5/10 bit sequence number

UM_Data: Basic Type Definitions

TTCN-3 Basic Types		
RLC_DataField_Type	octetstring	restrictions imposed from LI size of 11 bits is not applicable when the LI's are not present

RLC_UMD_Header_FixPartShortSN_Type

TTCN-3 Record Type			
Name	**RLC_UMD_Header_FixPartShortSN_Type**		
Comment	TS 36.322, clause 6.2.1.3 Figure 6.2.1.3-1, 6.2.1.3-3 and 6.2.1.3-4); one octet		
FramingInfo	RLC_FramingInfo_Type		2 bits FI
Extension	B1_Type		1 bit E
SequenceNumber	B5_Type		5 bits SN

RLC_UMD_Header_FixPartLongSN_Type

TTCN-3 Record Type			
Name	**RLC_UMD_Header_FixPartLongSN_Type**		
Comment	TS 36.322, clause 6.2.1.3 Figure 6.2.1.3-2, 6.2.1.3-5 and 6.2.1.3-6); two octets		
Reserved	B3_Type		3 bits reserved
FramingInfo	RLC_FramingInfo_Type		2 bits FI
Extension	B1_Type		1 bit E
SequenceNumber	B10_Type		10 bits SN

RLC_UMD_HeaderShortSN_Type

TTCN-3 Record Type			
Name	**RLC_UMD_HeaderShortSN_Type**		
Comment			
FixPart	RLC_UMD_Header_FixPartShortSN_Type		
FlexPart	RLC_PDU_Header_FlexPart_Type	opt	

RLC_UMD_HeaderLongSN_Type

TTCN-3 Record Type			
Name	**RLC_UMD_HeaderLongSN_Type**		
Comment			
FixPart	RLC_UMD_Header_FixPartLongSN_Type		
FlexPart	RLC_PDU_Header_FlexPart_Type	opt	

RLC_DataFieldList_Type

TTCN-3 Record of Type	
Name	**RLC_DataFieldList_Type**
Comment	One to one correspondence with sub headers (LengthIndicatorList_Type)
record of RLC_DataField_Type	

RLC_UMD_PDU_ShortSN_Type

TTCN-3 Record Type			
Name	**RLC_UMD_PDU_ShortSN_Type**		
Comment			
Header	RLC_UMD_HeaderShortSN_Type		
Data	RLC_DataFieldList_Type		

RLC_UMD_PDU_LongSN_Type

TTCN-3 Record Type			
Name	**RLC_UMD_PDU_LongSN_Type**		
Comment			
Header	RLC_UMD_HeaderLongSN_Type		
Data	RLC_DataFieldList_Type		

RLC_UMD_PDU_Type

TTCN-3 Union Type		
Name	**RLC_UMD_PDU_Type**	
Comment		
ShortSN	RLC_UMD_PDU_ShortSN_Type	
LongSN	RLC_UMD_PDU_LongSN_Type	

D.2.1.2.4 AM_Data

RLC PDU definition: AM (TS 36.322, clause 6.2.1.4 and 6.2.1.5)

RLC_AMD_Header_FixPart_Type

TTCN-3 Record Type			
Name	**RLC_AMD_Header_FixPart_Type**		
Comment	TS 36.322, clause 6.2.1.4 Figure 6.2.1.4-1, 6.2.1.4-2 and 6.2.1.4-3); 2 or 4 octets		
D_C	B1_Type		0 - Control PDU 1 - Data PDU
ReSeg	B1_Type		0 - AMD PDU 1 - AMD PDU segment
Poll	B1_Type		0 - Status report not requested 1 - Status report is requested
FramingInfo	RLC_FramingInfo_Type		2 bit FI
Extension	B1_Type		1 bit E
SN	B10_Type		Sequence numbers

RLC_AMD_Header_SegmentPart_Type

TTCN-3 Record Type			
Name	**RLC_AMD_Header_SegmentPart_Type**		
Comment	AMD PDU segment related info in PDU header acc. TS 36.322, clause 6.2.1.5		
LastSegmentFlag	B1_Type		0 - Last byte of the AMD PDU segment does not correspond to the last byte of an AMD PDU 1 - Last byte of the AMD PDU segment corresponds to the last byte of an AMD PDU
SegOffset	B15_Type		The SO field indicates the position of the AMD PDU segment in bytes within the original AMD PDU. Specifically, the SO field indicates the position within the Data field of the original AMD PDU to which the first byte of the Data field of the AMD PDU segment corresponds to.

RLC_AMD_Header_Type

TTCN-3 Record Type			
Name	**RLC_AMD_Header_Type**		
Comment			
FixPart	RLC_AMD_Header_FixPart_Type		
SegmentPart	RLC_AMD_Header_SegmentPart_Type	opt	present in case of AMD Seg PDU only
FlexPart	RLC_PDU_Header_FlexPart_Type	opt	

RLC_AMD_PDU_Type

TTCN-3 Record Type			
Name	**RLC_AMD_PDU_Type**		
Comment			
Header	RLC_AMD_Header_Type		
Data	RLC_DataFieldList_Type		

D.2.1.2.5 AM_Status

AM Status PDU (TS 36.322, clause 6.2.1.6)

AM_Status: Basic Type Definitions

TTCN-3 Basic Types		
RLC_Status_Padding_Type	bitstring length (1..7)	NOTE: in TTCN-3 length restriction cannot be done inline in record definition => explicit type definition necessary

RLC_Status_ACK_Type

TTCN-3 Record Type			
Name	**RLC_Status_ACK_Type**		
Comment			
ACK_SN	B10_Type		Acknowledgement SN (TS 36.322, clause 6.2.2.14)
Extn1	B1_Type		0 - a set of NACK_SN, E1 and E2 does not follow. 1 - a set of NACK_SN, E1 and E2 follows.

RLC_Status_SegOffset_Type

TTCN-3 Record Type			
Name	**RLC_Status_SegOffset_Type**		
Comment			
Start	B15_Type		SOstart field indicates the position of the first byte of the portion of the AMD PDU in bytes within the Data field of the AMD PDU
End	B15_Type		SOend field indicates the position of the last byte of the portion of the AMD PDU in bytes within the Data field of the AMD PDU. The special SOend value '111111111111111'B is used to indicate that the missing portion of the AMD PDU includes all bytes to the last byte of the AMD PDU

RLC_Status_NACK_Type

TTCN-3 Record Type			
Name	**RLC_Status_NACK_Type**		
Comment			
NACK_SN	B10_Type		
Extn1	B1_Type		0 - A set of NACK_SN, E1 and E2 does not follow. 1 - A set of NACK_SN, E1 and E2 follows.
Extn2	B1_Type		0 - A set of SOstart and SOend does not follow for this NACK_SN. 1 - A set of SOstart and SOend follows for this NACK_SN.
SO	RLC_Status_SegOffset_Type	opt	

RLC_Status_NACK_List_Type

TTCN-3 Record of Type	
Name	**RLC_Status_NACK_List_Type**
Comment	
record of RLC_Status_NACK_Type	

RLC_AM_StatusPDU_Type

TTCN-3 Record Type			
Name	**RLC_AM_StatusPDU_Type**		
Comment			
D_C	B1_Type		0 - Control PDU 1 - Data PDU
Type	B3_Type		000 - STATUS PDU 001..111 - Reserved (=> PDU to be discarded by the receiving entity for this release of the protocol)
Ack	RLC_Status_ACK_Type		ACK_SN and E1 bit
NackList	RLC_Status_NACK_List_Type	opt	presence depends on Extn1 bit of Ack filed (RLC_Status_ACK_Type)
Padding	RLC_Status_Padding_Type	opt	1..7 bit padding if needed for octet alignment

RLC_PDU: Basic Type Definitions

TTCN-3 Basic Types			
	RLC_SDU_Type	octetstring	

RLC_PDU_Type

TTCN-3 Union Type		
Name	**RLC_PDU_Type**	
Comment		
TMD	RLC_TMD_PDU_Type	
UMD	RLC_UMD_PDU_Type	
AMD	RLC_AMD_PDU_Type	
Status	RLC_AM_StatusPDU_Type	

RLC_PDUList_Type

TTCN-3 Record of Type	
Name	**RLC_PDUList_Type**
Comment	
record of RLC_PDU_Type	

RLC_SDUList_Type

TTCN-3 Record of Type	
Name	**RLC_SDUList_Type**
Comment	
record of RLC_SDU_Type	

D.2.1.3 PDCP

PDCP user plane SDU and PDU definitions
NOTE:
To allow direct encoding the definition for PDCP Data PDU is split into data PDU with long/short sequence number

PDCP: Basic Type Definitions

TTCN-3 Basic Types		
PDCP_SDU_Type	octetstring	

PDCP_SDUList_Type

TTCN-3 Record of Type	
Name	**PDCP_SDUList_Type**
Comment	
record of PDCP_SDU_Type	

PDCP_DataPdu_LongSN_Type

TTCN-3 Record Type			
Name	**PDCP_DataPdu_LongSN_Type**		
Comment	User plane PDCP Data PDU with long sequence number (TS 36.323, clause 6.2.3)		
D_C	B1_Type		0 - Control PDU 1 - Data PDU
Reserved	B3_Type		
SequenceNumber	B12_Type		12 bit sequence number
SDU	PDCP_SDU_Type		content (octetstring)

PDCP_DataPdu_ShortSN_Type

TTCN-3 Record Type			
Name	**PDCP_DataPdu_ShortSN_Type**		
Comment	User plane PDCP Data PDU with short sequence number (TS 36.323, clause 6.2.4)		
D_C	B1_Type		0 - Control PDU 1 - Data PDU
SequenceNumber	B7_Type		7 bit sequence number
SDU	PDCP_SDU_Type		content (octetstring)

PDCP_DataPdu_ExtSN_Type

TTCN-3 Record Type			
Name	**PDCP_DataPdu_ExtSN_Type**		
Comment	User plane PDCP Data PDU with extended sequence number (TS 36.323, clause 6.2.9)		
D_C	B1_Type		0 - Control PDU 1 - Data PDU
SequenceNumber	B15_Type		15 bit sequence number
SDU	PDCP_SDU_Type		content (octetstring)

PDCP_Ctrl_ROHC_FB_PDU_Type

TTCN-3 Record Type			
Name	**PDCP_Ctrl_ROHC_FB_PDU_Type**		
Comment	PDCP Control PDU for interspersed ROHC feedback packet (TS 36.323, clause 6.2.5)		
D_C	B1_Type		0 - Control PDU 1 - Data PDU
Type	B3_Type		000 - PDCP status report 001 - Header Compression Feedback Information 010..111 - reserved
Reserved	B4_Type		
ROHC_FB	octetstring		Contains one ROHC packet with only feedback, i.e. a ROHC packet that is not associated with a PDCP

PDCP_Ctrl_StatusReport_Type

TTCN-3 Record Type			
Name	**PDCP_Ctrl_StatusReport_Type**		
Comment	PDCP Control PDU for PDCP status report (TS 36.323, clause 6.2.6)		
D_C	B1_Type		0 - Control PDU 1 - Data PDU
Type	B3_Type		000 - PDCP status report 001 - Header Compression Feedback Information 010..111 - reserved
FMS	B12_Type		PDCP SN of the first missing PDCP SDU.
Bitmap	octetstring	opt	The MSB of the first octet of the type "Bitmap" indicates whether or not the PDCP SDU with the SN (FMS + 1) modulo 4096 has been received and, optionally decompressed correctly. 0 - PDCP SDU with PDCP SN = (FMS + bit position) modulo 4096 is missing in the receiver. The bit position of Nth bit in the Bitmap is N, i.e. the bit position of the first bit in the Bitmap is 1. 1 - PDCP SDU with PDCP SN = (FMS + bit position) modulo 4096 does not need to be retransmitted. The bit position of Nth bit in the Bitmap is N, i.e. the bit position of the first bit in the Bitmap is 1.

PDCP_Ctrl_StatusReportExt_Type

TTCN-3 Record Type			
Name	**PDCP_Ctrl_StatusReportExt_Type**		
Comment	PDCP Control PDU for PDCP status report using a 15 bit SN (TS 36.323, clause 6.2.6)		
D_C	B1_Type		0 - Control PDU 1 - Data PDU
Type	B3_Type		000 - PDCP status report 001 - Header Compression Feedback Information 010..111 - reserved
Reserved	B5_Type		5 reserved bits
FMS_Ext	B15_Type		PDCP SN of the first missing PDCP SDU.
Bitmap	octetstring	opt	The MSB of the first octet of the type "Bitmap" indicates whether or not the PDCP SDU with the SN (FMS + 1) modulo (Maximum_PDCP_SN + 1) has been received and, optionally decompressed correctly. 0 - PDCP SDU with PDCP SN = (FMS + bit position) modulo (Maximum_PDCP_SN + 1) is missing in the receiver. The bit position of Nth bit in the Bitmap is N, i.e. the bit position of the first bit in the Bitmap is 1. 1 - PDCP SDU with PDCP SN = (FMS + bit position) modulo (Maximum_PDCP_SN + 1) does not need to be retransmitted. The bit position of Nth bit in the Bitmap is N, i.e. the bit position of the first bit in the Bitmap is 1.

PDCP_PDU_Type

TTCN-3 Union Type		
Name	**PDCP_PDU_Type**	
Comment		
DataLongSN	PDCP_DataPdu_LongSN_Type	user plane PDCP data PDU with 12 Bit Seq Number
DataShortSN	PDCP_DataPdu_ShortSN_Type	user plane PDCP data PDU with 7 Bit Seq Number
DataExtSN	PDCP_DataPdu_ExtSN_Type	user plane PDCP data PDU with 15 Bit Seq Number
RohcFeedback	PDCP_Ctrl_ROHC_FB_PDU_Type	PDCP Control PDU for interspersed ROHC feedback packet
StatusReport	PDCP_Ctrl_StatusReport_Type	PDCP Control PDU for PDCP status report
StatusReportExt	PDCP_Ctrl_StatusReportExt_Type	PDCP Control PDU for PDCP status report using a 15 bit SN

PDCP_PDUList_Type

TTCN-3 Record of Type	
Name	**PDCP_PDUList_Type**
Comment	
record of PDCP_PDU_Type	

D.2.2 DRB_Primitive_Definitions

Primitive definitions to send/receive data PDUs over DRB's

D.2.2.1 DRB_Common

U_PlaneDataList_Type

TTCN-3 Union Type		
Name	**U_PlaneDataList_Type**	
Comment	MAC: acc. to rel-8 protocols there is not more than one MAC PDU per TTI; any MAC PDU is completely included in one subframe RLC: one or more RLC PDUs per TTI (e.g. RLC Data + Status PDU on a logical channel; more than one RLC Data PDU in one MAC PDU is valid too) any RLC PDU is completely included in one subframe PDCP: one or more PDUs per TTI; one PDCP PDU may be included in more than one subframe	
MacPdu	MAC_PDUList_Type	SS configuration: RLC TM mode, MAC no header removal (PDCP is not configured)
RlcPdu	RLC_PDUList_Type	SS configuration: RLC TM mode, MAC header removal (PDCP is not configured)
PdcpPdu	PDCP_PDUList_Type	SS configuration: RLC AM/UM mode, PDCP no header removal
PdcpSdu	PDCP_SDUList_Type	SS configuration: RLC AM/UM mode, PDCP header removal
RlcSdu	RLC_SDUList_Type	SS configuration: RLC UM mode with no PDCP, for example MRB

HarqProcessAssignment_Type

TTCN-3 Union Type		
Name	**HarqProcessAssignment_Type**	
Comment	in DL the HARQ process id may be specified by the test case or automatically assigned by SS	
Id	HarqProcessId_Type	HARQ process as specified by the test case NOTE1: the scope of this type is only for data being sent in one TTI; if data needs more than one TTI the HarqProcessId is undefined for the 2nd TTI onward what shall be handled as an error at the SS; SS may send a SYSTEM_IND indicating an error in this case; NOTE2: The initial value of the NDI shall be the same for all HARQ processes and cells
Automatic	Null_Type	HARQ process id automatically assigned by SS

D.2.2.2 Downlink

DRB_DataPerSubframe_DL_Type

TTCN-3 Record Type			
Name	**DRB_DataPerSubframe_DL_Type**		
Comment	common definition for one or several PDUs/SDUs to be sent in the subframe given by the subframe offset; NOTE 1: For MAC and RLC PDUs a single PDU is always sent in one subframe; SS shall raise an error indication (using SYSTEM_IND) when that is not possible NOTE 2: For PDCP the data may be spread over more than one subframe (segmented by the RLC); the TTCN implemetation is responsible to calculate appropriate offsets accordingly; the exact timing depends on (and is exactly specified by) configuration of the DL scheduling; SS shall raise an error when there is any conflict		
SubframeOffset	integer		subframe offset relative to the absolute timing information given in the common part of the ASP; NOTE 1: Notes: Acc. to TS 36.523-3, clause 7.3.3 in case of TDD or half-duplex configuration only subframes available for DL are taken into consideration NOTE 2: if a PDCP PDU or SDU takes more than one subframe, SubframeOffset specifies the first TTI
HarqProcess	HarqProcessAssignment_Type		HARQ process to be used: specific value (0..7) or automatically assigned by SS; in automatic mode SS chooses HARQ process out of the set configured by CcchDcchDtchConfigDL_Type.HarqProcessConfig NOTE: for PDCP SDUs or PDUs automatic mode shall be used; otherwise SS shall raise an error
PduSduList	U_PlaneDataList_Type		list of PDUs/SDUs to be sent in one TTI

DRB_DataPerSubframeList_DL_Type

TTCN-3 Record of Type	
Name	**DRB_DataPerSubframeList_DL_Type**
Comment	list of user plane data to be sent in sub-frames given by the SubframeOffset in the single elements of the list; Timing: the start time for the whole sequence is given by the timing info of the ASP (common information); the timing for the respective data pdus is given by the SubframeOffset relative to the common timing info; design consideration: repetitions of this sequence are not foreseen (in which case the subframe offset could not be related to the timing info of the ASP)
record of DRB_DataPerSubframe_DL_Type	

U_Plane_Request_Type

TTCN-3 Record Type			
Name	**U_Plane_Request_Type**		
Comment	NOTE: formal type definition to allow later enhancements; U_Plane_Request_Type defines a sequence of subframes in which data shall be sent		
SubframeDataList	DRB_DataPerSubframeList_DL_Type		

D.2.2.3 Uplink

DRB_DataPerSubframe_UL_Type

TTCN-3 Record Type			
Name	**DRB_DataPerSubframe_UL_Type**		
Comment	common definition for one or several PDUs/SDUs being received in one subframe or to receive one PDCP PDU or SDU being spread over more than one TTI; NOTE: There is a fix relation between HARQ process id and subframe in UL => it is not necessary to include HARQ process id for UL data		
PduSduList	U_PlaneDataList_Type		list of PDUs/SDUs being received in one TTI; elements of the list appear in the same order as the PDUs/SDUs in the MAC PDU; for PDCP when a PDU or SDU takes more than one TTI the list only contains this PDU or SDU
NoOfTTIs	integer		in case of PDCP: number of TTIs the SDU or PDU has taken NOTE 1: for the time being the NoOfTTIs is not checked by TTCN-3 and may be set to 1 by SS; NOTE 2: the timing info in common part of the ASP refers to the last TTI NOTE 3: when NoOfTTIs > 1 => PduSduList shall only contain one PDCP PDU or SDU in case of MAC or RLC PDUs: NoOfTTIs shall always be 1 (acc. to TS 36.321 MAC is not doing segmentation of RLC PDUs and acc. to TS 36.322, clause 6.2.2.2 the maximum RLC data is calculated to fit into a MAC PDU and RLC does segmentation accordingly)

U_Plane_Indication_Type

TTCN-3 Record Type			
Name	**U_Plane_Indication_Type**		
Comment	NOTE: formal type definition to allow later enhancements; U_Plane_Indication_Type defines data being received in a single subframe i.e. PDUs of subsequent TTIs are indicated in separated ASPs		
SubframeData	DRB_DataPerSubframe_UL_Type		

D.2.3 MBMS_MRB_Primitive_Definitions

EUTRA_MRB_PORT

TTCN-3 Port Type		
Name	**EUTRA_MRB_PORT**	
Comment		
out	MRB_COMMON_REQ	

MRB_COMMON_REQ

TTCN-3 Record Type			
Name	**MRB_COMMON_REQ**		
Comment	common ASP to send PDUs to MRBs		
Common	ReqAspCommonPart_Type		CellId : identifier of the cell RoutingInfo: set to Mrb TimingInfo : starting point when to start sending sequence of data PDUs e.g. SFN = X, subframe number = x; U_Plane.SubframeDataList[i].SubframeOffset := offset_i; => U_Plane.SubframeDataList[i].PduSduList shall be sent out at SFN = X + ((x + offset_i) / 10); subframe number = (x + offset_i) % 10 ControlInfo : CnfFlag:=false; FollowOnFlag:=false
U_Plane	U_Plane_Request_Type		

D.2.4 System_Interface

DRB_COMMON_REQ

TTCN-3 Record Type			
Name	**DRB_COMMON_REQ**		
Comment	common ASP to send PDUs to DRBs		
Common	ReqAspCommonPart_Type		CellId : identifier of the cell RoutingInfo : DRB id TimingInfo : starting point when to start sending sequence of data PDUs e.g. SFN = X, subframe number = x; U_Plane.SubframeDataList[i].SubframeOffset := offset_i; => U_Plane.SubframeDataList[i].PduSduList shall be sent out at SFN = X + ((x + offset_i) / 10); subframe number = (x + offset_i) % 10 ControlInfo : CnfFlag:=false; FollowOnFlag:=false
U_Plane	U_Plane_Request_Type		
SuppressPdcchForC_RNTI	Null_Type	opt	By default all DRB_COMMON_REQ scheduled DL PDU's are associated with an appropriate explicit configured or SS selected DL assignment allocation on PDCCH. For SuppressPdcch:=true in the sub frame in which DL PDU's are transmitted, there is no associated DL assignment allocation for configured C-RNTI. This will be used for SPS assignment based transmission or in any error scenarios; NOTE: this flag has no impact on PDCCH messages required for SPS activation

DRB_COMMON_IND

TTCN-3 Record Type			
Name	**DRB_COMMON_IND**		
Comment	common ASP to receive PDUs from DRBs		
Common	IndAspCommonPart_Type		CellId : identifier of the cell RoutingInfo : DRB id TimingInfo : time when message has been received NOTE 1: For MAC and RCL PDUs per definition U_Plane_Indication_Type corresponds to exactly one subframe => TimingInfo refers to this subframe NOTE 2: For PDCP a single PDU or SDU may take more than one TTI => TimingInfo refers to the end of the PDU/SDU and the length is given by NoOfTTIs in U_Plane_Indication_Type (the end of the PDU/SDU is the last RLC PDU being received; in case of retransmissions this is not necessarily the RLC PDU with the last SN)
U_Plane	U_Plane_Indication_Type		

EUTRA_DRB_PORT

TTCN-3 Port Type		
Name	**EUTRA_DRB_PORT**	
Comment		
out	DRB_COMMON_REQ	
in	DRB_COMMON_IND	

D.3 EUTRA_ASP_SrbDefs

D.3.1 SRB_DATA_ASPs

ASP Definitions to send/receive peer-to-peer messages on SRBs

C_Plane_Request_Type

TTCN-3 Record Type			
Name	**C_Plane_Request_Type**		
Comment	RRC and/or NAS PDU to be send to the UE; Note: it may be necessary to allow more than one NAS PDU (-> "record of") => FFS		
Rrc	RRC_MSG_Request_Type	opt	omit: NAS message shall be present; NAS message shall be sent in DLInformationTransfer present: if NAS message is present also, (piggybacked) NAS PDU shall be security protected (if necessary) and inserted in RRC PDU's DedicatedInfoNAS
Nas	NAS_MSG_RequestList_Type	opt	omit: RRC message shall be present; RRC message does not contain (piggybacked) NAS PDU present: if RRC message is omitted => NAS message shall be sent embedded in DLInformationTransfer if RRC message is present => NAS message is piggybacked in RRC message in case of RRC message is sent on CCCH, NAS message shall be omitted NOTE: acc. DEC 08 ASN.1 RRCConnectionReconfiguration may contain DedicatedInfoNAS several times

C_Plane_Indication_Type

TTCN-3 Record Type			
Name	**C_Plane_Indication_Type**		
Comment	RRC and/or NAS PDU to be received from the UE; Note: it may be necessary to allow more than one NAS PDU (-> "record of") => FFS		
Rrc	RRC_MSG_Indication_Type	opt	omit: NAS message shall be present; NAS message is received in ULInformationTransfer present: if NAS message is present also, DedicatedInfoNAS contains unstructured and ciphered NAS message and the NAS message is the deciphered message in structured format
Nas	NAS_MSG_IndicationList_Type	opt	omit: RRC message shall be present; RRC message does not contain (piggybacked) NAS PDU present: if RRC message is omitted => NAS message has been received in ULInformationTransfer if RRC message is present => NAS message has been piggybacked in RRC message NOTE: even though currently (DEC 08 ASN.1) there is no RRC PDU in UL containing more than one DedicatedInfoNAS we provide a list to allow extendability

SRB_COMMON_REQ

TTCN-3 Record Type			
Name	**SRB_COMMON_REQ**		
Comment	common ASP to send PDUs to SRB0, SRB1 or SRB2		
Common	ReqAspCommonPart_Type		CellId identifier of the cell RoutingInfo SRB0, SRB1, SRB2 TimingInfo Now in normal cases; For latency tests TimingInfo can be set to the SFN/subframe in which the RRC messages shall be sent out (in this case and if the RRC PDU is too long to be sent in one TTI the TimingInfo corresponds to the first TTI) ControlInfo CnfFlag:=false; FollowOnFlag true: Indicates that the message(s) to be sent on the same TTI will follow NOTE 1: When FollowOnFlag is true, TimingInfo shall always be "Now". Otherwise SS shall produce an error NOTE 2: the follow on flag applies only for messages of the same SRB false: Indicates that no more message(s) will follow
Signalling	C_Plane_Request_Type		

SRB_COMMON_IND

TTCN-3 Record Type			
Name	**SRB_COMMON_IND**		
Comment	common ASP to receive PDUs from SRB0, SRB1 or SRB2		
Common	IndAspCommonPart_Type		CellId identifier of the cell RoutingInfo SRB0, SRB1, SRB2 TimingInfo time when message has been received (as received from the SS by the NAS emulator)
Signalling	C_Plane_Indication_Type		

D.3.2 Port_Definitions

EUTRA_SRB_PORT

TTCN-3 Port Type		
Name	**EUTRA_SRB_PORT**	
Comment	EUTRA PTC: Port for Sending/Receiving data on SRBs	
out	SRB_COMMON_REQ	
in	SRB_COMMON_IND	

NASEMU_SRB_PORT

TTCN-3 Port Type		
Name	**NASEMU_SRB_PORT**	
Comment	NASEMU PTC: Port for Sending/Receiving data on SRBs (interface to EUTRA PTC)	
Out	SRB_COMMON_IND	
In	SRB_COMMON_REQ	

D.4 IP_ASP_TypeDefs

General Notes:
NOTE 1:
In general the handling of IP data shall be independent from the RAT being used on lower layers.
NOTE 2:
It shall be possible for SS implementation to reuse existing IP stack implementations in the system adaptor;
therefore the well-known concept of socket programming shall be supported
(regardless of whether those are used in the system adaptor implementation or not)
NOTE 3:
Since in general at the network side there are several different IP addresses the SS needs to simulate more than one IP address;
that can be based on a concept of multiple virtual network adaptors
NOTE 4:
There is no easy way to control the routing of IP data for an IP connection from above the IP stack
i.e. there are no parameters at the socket interface to determine e.g. cell id and DRB id
=> another independent logical entity (DRB-MUX) is needed below the IP stack which is responsible to control the routing of IP packets from/to DRBs in different cells of different RATs

Reference:
An introduction to socket programming can be found in
UNIX Network Programming Volume 1, Third Edition: The Sockets Networking API
by W. Richard Stevens, Bill Fenner, Andrew M. Rudoff

D.4.1 IP_Common

IP_Common: Basic Type Definitions

TTCN-3 Basic Types		
PortNumber_Type	UInt16_Type	

IPv4_AddrInfo_Type

TTCN-3 Record Type			
Name	**IPv4_AddrInfo_Type**		
Comment	IPv4 specific info of the socket addr (AF_INET)		
Addr	charstring		IP Address as string (IP v4 dot notation) to be converted to 32-bit unsigned integer

IPv6_AddrInfo_Type

TTCN-3 Record Type			
Name	**IPv6_AddrInfo_Type**		
Comment	IPv6 specific info of the socket addr (AF_INET6); NOTE: sin6_flowinfo can be ignored and set to 0		
Addr	charstring		to be converted to sin6_addr
ScopeId	UInt32_Type	opt	sin6_scope_id in general an IPv6 address is like "fe80::1%eth0" with eth0 being the network adaptor mapped to a scope id (Unix) assumption: for UE conformance testing it is not necessary to distiguish different scopes and the scope id in general can be determined by the system adaptor => omit

IP_AddrInfo_Type

TTCN-3 Union Type		
Name	**IP_AddrInfo_Type**	
Comment		
V4	IPv4_AddrInfo_Type	
V6	IPv6_AddrInfo_Type	

IP_Socket_Type

TTCN-3 Record Type			
Name	**IP_Socket_Type**		
Comment	Socket		
IpAddr	IP_AddrInfo_Type	opt	IP address
Port	PortNumber_Type	opt	port number

InternetProtocol_Type

TTCN-3 Enumerated Type	
Name	**InternetProtocol_Type**
Comment	
udp	
tcp	
icmp	
icmpv6	

IP_Connection_Type

TTCN-3 Record Type			
Name	**IP_Connection_Type**		
Comment	A connection between peer-to-peer entities is unambiguously defined by the protocol (udp/tcp/icmp/icmpv4), the local socket and the remote socket		
Protocol	InternetProtocol_Type		
Local	IP_Socket_Type	opt	
Remote	IP_Socket_Type	opt	

D.4.2 IP_Config

Configuration of the routing table managed be the system adaptor's DRB-MUX:
foreach IP connection it is specified which
- RAT
- Cell
- DRB

to be used.
The IP connection does not need to be fully specified depending on the role SS plays (e.g. in case of a server role the port number of the remote side is not known in advance).
The configurations of DRBs within the same cell shall be mutual exclusive.

With the configuration of the IP routing the DRB is configured either in IP or in raw mode:
either there are entries for the DRB in the routing table (IP mode) or not (raw mode)
=> It is not necessary to reconfigure this for the respective RAT.

Behaviour of the DRB-MUX in UL:
- SS gets data packet from the lower layers (e.g. PDCP SDU)
- SS checks whether there is any IP connection configured for this DRB (identified by {RAT, CellId, DrbId})
  if YES => packet is routed to the IP stack (IP mode)
  if NO => packet is handed over to the DRB port (raw mode)

NOTE 1:

If there is any entry for a DRB in the routing table this DRB is considered as being in IP mode and all UL IP packets are sent to the IP stack regardless of whether their addresses match the DRB's routing entries or not (in general 'unknown' packets are discarded by the IP stack)
=> a DRB can be either in IP or in raw mode
NOTE 2:
=> The SS does not need to evaluate any IP headers to decide whether data shall be routed to the DRB port or to the IP stack (i.e. there is no conflict with unstructured loopback data)

Behaviour of the DRB-MUX in DL:
- SS gets IP packets from the IP stack for an IP connection
- SS compares the IP connection (protocol, local/remote IP Addr) against the IP routing table and
  checks whether the corresponding protocol stack is configured at the lower layers =>
  1. no match:
    no entry in the routing table fits to the address in the IP packet
    or the corresponding RB is not configured
    => SS shall raise an error (DRBMUX_COMMON_IND_CNF.Error)
  2. one match:
    There is exactly one possibility to route the IP packet
    => SS shall send the packet to this RB
  3. several matches:
    There are more than one DRBs, cells or RATs to which the packet may be routed
    => SS shall raise an error if there is more than one DRB in one cell matching;
      if the DRBs belong to different cells or RATS SS shall send the data to all of them
      (whether this may occur in test cases is FFS)

General notes:
NOTE 1:
SS may use the information of the routing table to determine which network adaptors it needs to simulate (implementation dependent);
in general there will be more than one IP address at the network side.
NOTE 2:
In general the routing table is a simplified DL TFT implementation
NOTE 3:
When the routing table is empty all DRBs are in raw mode; this shall be the initial condition at the DRB-MUX;
=> for L2 testing in general (and apart from the preamble) there is no need to use/configure the IP_PTC; the configuration of the RAT specific U-plane stacks is not affected

IP_RoutingInfo_Type

TTCN-3 Record Type			
Name	**IP_RoutingInfo_Type**		
Comment			
IpInfo	IP_Connection_Type		IP connection tuple: protocol, local socket, remote socket depending on the role the SS plays the following information may be provided (informative; even less information can be sufficient): 1. TCP/UDP server - local IP addr -- provided - local port -- provided - remote IP addr -- omit - remote port -- omit 2. TCP/UDP client - local IP addr -- provided (to inform SS about the local IP addr for this service) - local port -- omit; for UDP a well-defined port may be defined (protocol dependent, e.g. DHCP) - remote IP addr -- provided - remote port -- provided 3. ICMP (in general ICMP may be mapped only to a single DRB) - local IP addr -- provided (to inform SS about the local IP addr for this service) - local port -- n/a (shall be set to omit) - remote IP addr -- omit - remote port -- n/a (shall be set to omit) NOTE: In case of broadcasts in UL the broadcast address shall match any local IP address; in DL for broadcast services typically no remote IP address is specified in the routing table
DRB	IP_DrbInfo_Type		

IP_RoutingTable_Type

TTCN-3 Record of Type	
Name	**IP_RoutingTable_Type**
Comment	NOTE: configurations of DRBs within the same cell shall be mutual exclusive
record of IP_RoutingInfo_Type	

D.4.3 IPsec_Config

IP_ASP_TypeDefs: Constant Definitions

TTCN-3 Basic Types			
tsc_IPsec_SPI_Max	integer	4294967295	

IPsec_Config: Basic Type Definitions

TTCN-3 Basic Types		
IPsec_SPI_Type	integer (0..tsc_IPsec_SPI_Max)	security parameter index for IPsec; According to RFC 2406, SPI values from 0 to 255 are reserved

IPsec_IntegrityAlgorithm_Type

TTCN-3 Enumerated Type	
Name	**IPsec_IntegrityAlgorithm_Type**
Comment	
hmac_md5_96	
hmac_sha_1_96	

IPsec_CipheringAlgorithm_Type

TTCN-3 Enumerated Type	
Name	**IPsec_CipheringAlgorithm_Type**
Comment	
des_ede3_cbc	
aes_cbc	
nociph	no ciphering

IPsec_SecurityKeys_Type

TTCN-3 Record Type			
Name	**IPsec_SecurityKeys_Type**		
Comment	to install the security keys		
MD5_96Key	bitstring length (128)		
SHA_1_96Key	bitstring length (160)		
DES_EDE3_CBCKey	bitstring length (192)		
AES_CBCKey	bitstring length (128)		

IPsec_SecurityAssociation_Type

TTCN-3 Record Type			
Name	**IPsec_SecurityAssociation_Type**		
Comment	single security association (SA); for configuration of an SA at the SS all fields are mandatory; to release an SA the optional information is omitted		
SPI	IPsec_SPI_Type		
SrcAddress	charstring		
DestAddress	charstring		
SrcPort	UInt16_Type		
DestPort	UInt16_Type		
IntegrityAlgorithm	IPsec_IntegrityAlgorithm_Type	opt	mandatory to set-up an SA
CipheringAlgorithm	IPsec_CipheringAlgorithm_Type	opt	mandatory to set-up an SA

IPsec_SecurityAssociationList_Type

TTCN-3 Record of Type	
Name	**IPsec_SecurityAssociationList_Type**
Comment	
record of IPsec_SecurityAssociation_Type	

IPsec_Configure_Type

TTCN-3 Record Type			
Name	**IPsec_Configure_Type**		
Comment	add new security associations; existing SAs are not affected		
SA_List	IPsec_SecurityAssociationList_Type		
SecurityKeys	IPsec_SecurityKeys_Type		

IPsec_Release_Type

TTCN-3 Record Type			
Name	**IPsec_Release_Type**		
Comment	release security associations; NOTE: in context with multiple PDNs it cannot be ensured that all SPIs are unique; e.g. the UE may use the same SPI values in different PDNs in which case uniqueness cannot be achieved furthermore it depends on the system implementation how entries in the IPsec SAD and SPD are administrated => to release SAs the SS gets the same information as for configuration but without the security algorithms		
SA_List	IPsec_SecurityAssociationList_Type		

D.4.4 IP_SocketHandling

Handling of IP data and IP connections
NOTE 1:
In general IP connections are distinguished by the tuple {protocol, local socket, remote socket};
this information is used at the interface between TTCN and the system adaptor.
It is up the system adaptor implementation to associate the IP connection with the internal socket (file descriptor; implementation dependent)
NOTE 2:
In general the association of the IP connections to (internal) sockets and the routing table for the DRB mapping (as configured with IP_RoutingTable_Type) are independent from each other

D.4.4.1 Socket_Common

IP_SockOpt_Type

TTCN-3 Union Type		
Name	**IP_SockOpt_Type**	
Comment	socket options acc. to the setsockopt system call (i.e. for level=SOL_SOCKET in case of Berkeley socket API); NOTE: only options being relevant for a specific applications (upon a socket) are configured by TTCN other options (e.g. SO_REUSEADDR) are out of TTCN and therefore a matter of system adaptor implementation	
SO_BROADCAST	boolean	set to true when IP broadcast messages shall be allowed for a port; this is required e.g. in case of DHCP
IP_MTU_SIZE	integer	MTU size to be used for IP data; NOTEs: - Even though the MTU size is defined as socket option it shall be the same for all sockets of a given interface (i.e. at least within one PDN the MTU size shall be the same) - in general a PIXIT is used as constant value for all sockets

IP_SockOptList_Type

TTCN-3 Record of Type	
Name	**IP_SockOptList_Type**
Comment	
record of IP_SockOpt_Type	

IP_SocketError_Type

TTCN-3 Union Type		
Name	**IP_SocketError_Type**	
Comment	used to indicate errors related to sockets; the IP_Connection shall contain as much address information as available at the system adaptor	
InvalidAddress	Null_Type	TTCN error: e.g. invalid or incomplete address information
System	integer	system error caused by system call; the integer value may be used for validation but shall not be evaluated by TTCN

D.4.4.2 Socket_Datagram

Socket_Datagram: Basic Type Definitions

TTCN-3 Basic Types		
Datagram_Content_Type	octetstring	data as sent/received with sendto()/recvfrom() on UDP or ICMP socket; NOTE: For ICMP the data may depend on the socket options (FFS); in general it does not include the IP header and the checksum of the ICMP packet needs to be calculated/checked in TTCN

Datagram_DL_Type

TTCN-3 Record Type			
Name	**Datagram_DL_Type**		
Comment	datagram to be sent at a UDP or ICMP socket		
Buffer	Datagram_Content_Type		content of the IP packet

Datagram_UL_Type

TTCN-3 Record Type			
Name	**Datagram_UL_Type**		
Comment	datagram as received on a UDP or ICMP socket		
Buffer	Datagram_Content_Type		content of the IP packet
DrbInfo	IP_DrbInfo_Type	opt	"interface id" where the data comes from in case of broadcast or multicast packets: for the LTE test model this is the DRB on which the IP packet has been received; the information is necessary when the SS cannot resolve an IP address being assigned to that DRB. => when the SS provides a broadcast or multicast address as local address in the ConnectionId of the ASP, the SS shall provide the DRB information in this field When the ConnectionId of the ASP is fully specified and unique (unicast address at least for local address) the DrbId is ignored by TTCN

D.4.4.3 TCP_Socket

TCP primitives used on the IP port

TCP_Socket: Basic Type Definitions

TTCN-3 Basic Types		
TCP_Data_Type	octetstring	data as sent/received with send()/recv() on a TCP socket

InternetApplication_Type

TTCN-3 Enumerated Type	
Name	**InternetApplication_Type**
Comment	as TCP is stream oriented SS may need information about which criteria to be applied to get start/end of an application message
ims	
http	

TCP_ConnectRequest_Type

TTCN-3 Record Type			
Name	**TCP_ConnectRequest_Type**		
Comment	TCP client: -> 'connect' system call		
SockOptList	IP_SockOptList_Type		when there are no options to configure the list is empty
Application	InternetApplication_Type		to specify start/end criteria for application messages

TCP_Listen_Type

TTCN-3 Record Type			
Name	**TCP_Listen_Type**		
Comment	TCP server: -> 'listen' system call		
SockOptList	IP_SockOptList_Type		when there are no options to configure the list is empty
Application	InternetApplication_Type		to specify start/end criteria for application messages

TCP_CtrlRequest_Type

TTCN-3 Union Type		
Name	**TCP_CtrlRequest_Type**	
Comment		
ConnectReq	TCP_ConnectRequest_Type	request a 'connect' to a remote server system calls (informative) socket -- get file descriptor (setsockopt) -- normally not needed bind -- assign local IP addr (to cope with multiple IP addresses) and dedicated port number (if local port is given) connect -- connect to the client IP_Connection: protocol -- tcp local IP addr -- mandatory to distinguish different network adaptors local port -- omit (ephemeral port will be assigned by the system) or specific port to be used for this connection (e.g. to bind a given port number to the IMS client) remote IP addr -- mandatory remote port -- mandatory
Listen	TCP_Listen_Type	establish a server at the local (SS) side system calls (informative) socket -- get file descriptor (setsockopt) -- if needed bind -- assign local IP addr and port listen -- await incoming connection IP_Connection: protocol -- tcp local IP addr -- mandatory to distinguish different network adaptors local port -- mandatory remote IP add -- omit remote port -- omit
Close	Null_Type	close a connection system calls (informative): close IP_Connection: protocol -- tcp local IP addr -- mandatory local port -- mandatory remote IP addr -- mandator for TCP connections, omit for TCP server y remote port -- mandator for TCP connections, omit for TCP server y

TCP_DataRequest_Type

TTCN-3 Union Type		
Name	**TCP_DataRequest_Type**	
Comment		
Send	TCP_Data_Type	send data system calls (informative): send or write IP_Connection: protocol -- tcp local IP addr -- mandatory local port -- mandatory remote IP addr -- mandatory remote port -- mandatory

TCP_CtrlIndication_Type

TTCN-3 Union Type		
Name	**TCP_CtrlIndication_Type**	
Comment		
ConnectCnf	Null_Type	confirm a 'connect' to a remote server system calls (informative): getsockname -- get local port (ephemeral port assigned by the system) IP_Connection: protocol -- tcp local IP addr -- mandatory (as in corresponding TCP_ConnectRequest) local port -- mandatory (if there is more than one connection to the same server the local port is necessary to distinguish the connections) remote IP addr -- mandatory (as in corresponding TCP_ConnectRequest) remote port -- mandatory (as in corresponding TCP_ConnectRequest)
Accept	Null_Type	sent by the SS when it 'accepts' an incoming connection system calls (informative): accept IP_Connection: protocol -- tcp local IP addr -- mandatory (as in corresponding TCP_ListenRequest) local port -- mandatory (as in corresponding TCP_ListenRequest) remote IP addr -- mandatory (as gotten from 'accept') remote port -- mandatory (as gotten from 'accept')
Close	Null_Type	indicate 'close' by the remote side system calls (informative): indicated by recv or read IP_Connection: protocol -- tcp local IP addr -- mandatory local port -- mandatory remote IP addr -- mandatory remote port -- mandatory
CloseCnf	Null_Type	Confirmation for 'close' request; necessary since for TCP there are IP packets to release the connection system calls (informative): close IP_Connection: protocol -- tcp local IP addr -- mandatory local port -- mandatory remote IP addr -- mandatory for TCP connections, omit for TCP server remote port -- mandatory for TCP connections, omit for TCP server

TCP_DataIndication_Type

TTCN-3 Union Type		
Name	**TCP_DataIndication_Type**	
Comment		
Recv	TCP_Data_Type	receive data system calls (informative): recv or read IP_Connection: protocol -- tcp local IP addr -- mandatory local port -- mandatory remote IP addr -- mandatory remote port -- mandatory

D.4.4.4 UDP_Socket

UDP primitives used on the IP port
NOTE:
In principle a UDP socket may communicate with different remote entities;
therefore the system adaptor may associate the socket handle with the local socket only
(local IP address and local port)

UDP_SocketReq_Type

TTCN-3 Record Type			
Name	**UDP_SocketReq_Type**		
Comment	to establish a UDP server or to bind local port number		
SockOptList	IP_SockOptList_Type		e.g. to allow broadcast messages; when there are no options to configure the list is empty

UDP_CtrlRequest_Type

TTCN-3 Union Type		
Name	**UDP_CtrlRequest_Type**	
Comment		
SocketReq	UDP_SocketReq_Type	request the system adaptor to bind a socket to a local address; this is needed in general when the system adaptor acts as 1. UDP server 2. UDP client when it uses a well-known port rather than an ephemeral port (this is e.g. for DHCP) 3. UDP client when a local address needs to be bond (e.g. when there are several local addresses) system calls (informative): socket -- get file descriptor (setsockopt) -- needed e.g. to allow broad cast message bind -- assign local IP address (to cope with multiple IP addresses) and local port (in case of well-known local port) IP_Connection: protocol -- udp local IP addr -- mandatory (to distinguish multiple IP addresses) local port -- optional (mandatory in case of a UDP server) remote IP addr -- omit remote port -- omit
Close	Null_Type	release local socket system calls (informative): close IP_Connection: protocol -- udp local IP addr -- mandatory (to identify local socket) local port -- mandatory (to identify local socket) remote IP addr -- omit remote port -- omit

UDP_DataRequest_Type

TTCN-3 Union Type		
Name	**UDP_DataRequest_Type**	
Comment		
SendTo	Datagram_DL_Type	send data to (any) remote socket; NOTE: To simplify implementation of the system adaptor the local socket shall be bond in any case (using 'SocketReq') to specify the local IP address before sending data; (in general the sendto system call can be used without explicitly binding the socket before; in this case the port gets implicitly bond to an ephemeral port and the default IP address is used) system calls (informative): sendto IP_Connection: protocol -- udp local IP addr -- mandatory (to identify local socket) local port -- mandatory (to identify local socket) remote IP addr -- mandatory (to address remote socket) remote port -- mandatory (to address remote socket)

UDP_CtrlIndication_Type

TTCN-3 Union Type		
Name	**UDP_CtrlIndication_Type**	
Comment		
SocketCnf	Null_Type	confirm 'SocketReq' and tell TTCN about assignment of ephemeral port; system calls (informative): getsockname -- get local port (ephemeral port assigned by the system; not needed if local port is well-known) IP_Connection: protocol -- udp local IP addr -- mandatory local port -- mandatory (well-known or ephemeral port assigned by the system) remote IP addr -- omit remote port -- omit

UDP_DataIndication_Type

TTCN-3 Union Type		
Name	**UDP_DataIndication_Type**	
Comment		
RecvFrom	Datagram_UL_Type	receive data; system calls (informative): recvfrom -- get data and src addr IP_Connection: protocol -- udp local IP addr -- mandatory (see note) local port -- mandatory remote IP addr -- mandatory (as gotten from recvfrom) remote port -- mandatory (as gotten from recvfrom) NOTE: The UE may send a UDP packet as broadcast (IP Addr 255.255.255.255 - e.g. in case of DHCP) or multicast (e.g. ICMPv6) SS shall consider a broadcast address as matching every IP for UL and DL; the SS shall not replace the broadcast/multicast address by the local unicast address, but shall provide DRB information in RecvFrom; example: - SS gets DHCPDISCOVER with DEST_Addr=255.255.255.255 DEST_Port=67, SRC_Addr=0.0.0.0 SRC_Port=68 - TTCN gets DHCPDISCOVER with local Addr=(255.255.255.255 Port=67), remote Addr=(0.0.0.0 Port=68), DrbId=(LTE, cell1, DRB1) - TTCN sends DHCPOFFER with local Addr=(local IP Addr Port=67), remote Addr=(255.255.255.255 Port=68)

D.4.4.5 ICMP_Socket

ICMP primitives used on the IP port
NOTE:
the local side is identified by the protocol and in general by the local IP address

ICMP_SocketReq_Type

TTCN-3 Record Type			
Name	**ICMP_SocketReq_Type**		
Comment	to establish a raw socket to send/receive ICMP packets		
SockOptList	IP_SockOptList_Type		e.g. to set the IP_HDRINCL socket option (to include the IP header in the data buffer) -> FFS when there are no options to configure the list is empty

ICMP_CtrlRequest_Type

TTCN-3 Union Type		
Name	**ICMP_CtrlRequest_Type**	
Comment		
SocketReq	ICMP_SocketReq_Type	request the system adaptor to open a raw socket (IPv4 or IPv6) system calls (informative): socket -- get file descriptor (IPPROTO_ICMP or IPPROTO_IPV6); (setsockopt) -- optional; to set socket options bind -- assign local IP address (to cope with multiple IP addresses) IP_Connection: protocol -- icmp or icmpv6 local IP addr -- mandatory (to distinguish multiple IP addresses) local port -- omit (not applicable for ICMP) remote IP addr -- omit remote port -- omit (not applicable for ICMP)
Close	Null_Type	release local socket system calls (informative): close IP_Connection: protocol -- icmp or icmpv6 local IP addr -- mandatory (to identify local socket) local port -- omit remote IP addr -- omit remote port -- omit

ICMP_DataRequest_Type

TTCN-3 Union Type		
Name	**ICMP_DataRequest_Type**	
Comment		
SendTo	Datagram_DL_Type	send datagram system calls (informative): sendto IP_Connection: protocol -- icmp or icmpv6 local IP addr -- mandatory (to identify local socket) local port -- omit remote IP addr -- mandatory remote port -- omit

ICMP_CtrlIndication_Type

TTCN-3 Union Type		
Name	**ICMP_CtrlIndication_Type**	
Comment		
SocketCnf	Null_Type	confirm 'SocketReq' system calls (informative): (SocketCnf is sent when all system calls for SocketReq have been successful) IP_Connection: protocol -- icmp or icmpv6 local IP addr -- mandatory local port -- omit remote IP addr -- omit remote port -- omit

ICMP_DataIndication_Type

TTCN-3 Union Type		
Name	**ICMP_DataIndication_Type**	
Comment		
RecvFrom	Datagram_UL_Type	receive datagram system calls (informative): recvfrom -- get data and src addr IP_Connection: protocol -- icmp or icmpv6 local IP addr -- mandatory (see note) local port -- omit remote IP addr -- mandatory (as gotten from recvfrom) remote port -- omit NOTE: As for UDP there may be multicast/broadcast packets. In this case - as for UDP - the SS shall provide the DRB information in RecvFrom.

D.4.4.6 Socket_Primitives

IP_CtrlRequest_Type

TTCN-3 Union Type		
Name	**IP_CtrlRequest_Type**	
Comment		
TCP	TCP_CtrlRequest_Type	
UDP	UDP_CtrlRequest_Type	
ICMP	ICMP_CtrlRequest_Type	

IP_DataRequest_Type

TTCN-3 Union Type		
Name	**IP_DataRequest_Type**	
Comment		
TCP	TCP_DataRequest_Type	
UDP	UDP_DataRequest_Type	
ICMP	ICMP_DataRequest_Type	

IP_CtrlIndication_Type

TTCN-3 Union Type		
Name	**IP_CtrlIndication_Type**	
Comment		
TCP	TCP_CtrlIndication_Type	
UDP	UDP_CtrlIndication_Type	
ICMP	ICMP_CtrlIndication_Type	
Error	IP_SocketError_Type	

IP_DataIndication_Type

TTCN-3 Union Type		
Name	**IP_DataIndication_Type**	
Comment		
TCP	TCP_DataIndication_Type	
UDP	UDP_DataIndication_Type	
ICMP	ICMP_DataIndication_Type	

D.4.5 System_Interface

DRBMUX_CONFIG_REQ

TTCN-3 Union Type		
Name	**DRBMUX_CONFIG_REQ**	
Comment	NOTE 1: There is just one primitive to configure the whole routing table. It is not foreseen to add, remove or manipulate single entries but the table is managed in TTCN and completely configured on any change; (otherwise it might get complicated to identify single entries) NOTE 2: the SS's routing table shall be empty at the beginning and can be cleared by an empty record (DRBMUX_CONFIG_REQ.RoutingInfo = {}) NOTE 3: In general a reconfiguration of the routing table during a test case would be necessary only if an ephemeral port is needed to distinguish different routing (e.g. when there are several TCP connections of the same service routed to different DRBs)	
RoutingInfo	IP_RoutingTable_Type	

DRBMUX_COMMON_IND_CNF

TTCN-3 Union Type		
Name	**DRBMUX_COMMON_IND_CNF**	
Comment		
Confirm	Null_Type	confirm DRBMUX_CONFIG_REQ
Error	Null_Type	indication of errors at the DRB-MUX: An Error shall be raised by the DRB-MUX e.g. in the following cases: - in DL when there are IP packets which cannot be routed to any DRB i.e. the IP packet does not match to any entry in the routing table or the corresponding RB is not configured - in DL when there are several DRBs possible for routing in the same cell

IPSEC_CONFIG_REQ

TTCN-3 Union Type		
Name	**IPSEC_CONFIG_REQ**	
Comment		
Configure	IPsec_Configure_Type	
Release	IPsec_Release_Type	

IPSEC_CONFIG_CNF

TTCN-3 Union Type		
Name	**IPSEC_CONFIG_CNF**	
Comment		
Confirm	Null_Type	confirm IPSEC_CONFIG_REQ
Error	Null_Type	to indicate invalid configuration of IPsec

IP_SOCKET_CTRL_REQ

TTCN-3 Record Type			
Name	**IP_SOCKET_CTRL_REQ**		
Comment			
ConnectionId	IP_Connection_Type		
Req	IP_CtrlRequest_Type		

IP_SOCKET_DATA_REQ

TTCN-3 Record Type			
Name	**IP_SOCKET_DATA_REQ**		
Comment			
ConnectionId	IP_Connection_Type		
Req	IP_DataRequest_Type		

IP_SOCKET_CTRL_IND

TTCN-3 Record Type			
Name	**IP_SOCKET_CTRL_IND**		
Comment			
ConnectionId	IP_Connection_Type		
Ind	IP_CtrlIndication_Type		

IP_SOCKET_DATA_IND

TTCN-3 Record Type			
Name	**IP_SOCKET_DATA_IND**		
Comment			
ConnectionId	IP_Connection_Type		
Ind	IP_DataIndication_Type		

IP_SOCKET_REQ

TTCN-3 Union Type		
Name	**IP_SOCKET_REQ**	
Comment		
CTRL	IP_SOCKET_CTRL_REQ	
DATA	IP_SOCKET_DATA_REQ	

IP_SOCKET_IND

TTCN-3 Union Type		
Name	**IP_SOCKET_IND**	
Comment		
CTRL	IP_SOCKET_CTRL_IND	
DATA	IP_SOCKET_DATA_IND	

IP_CONTROL_PORT

TTCN-3 Port Type		
Name	**IP_CONTROL_PORT**	
Comment		
out	DRBMUX_CONFIG_REQ	
in	DRBMUX_COMMON_IND_CNF	

IPSEC_CONTROL_PORT

TTCN-3 Port Type		
Name	**IPSEC_CONTROL_PORT**	
Comment		
out	IPSEC_CONFIG_REQ	
in	IPSEC_CONFIG_CNF	

IP_SOCKET_PORT

TTCN-3 Port Type		
Name	**IP_SOCKET_PORT**	
Comment		
out	IP_SOCKET_REQ	
in	IP_SOCKET_IND	

D.5 NasEmu_AspTypes

System interface between NAS emulation and system adaptor

D.5.1 System_Interface

RRC_PDU_REQ

TTCN-3 Record Type			
Name	**RRC_PDU_REQ**		
Comment			
Common	ReqAspCommonPart_Type		CellId : identifier of the cell RoutingInfo : SRB0, SRB1, SRB2 TimingInfo : Now in normal cases; For latency tests TimingInfo can be set to the SFN/subframe in which the RRC messages shall be sent out NOTE 1: if the RRC PDU is too long to be sent in one TTI the TimingInfo corresponds to the first TTI NOTE 2: the TimingInfo is not changed by the NAS Emu (i.e. the timing info as coming from the test case (SRB_COMMON_REQ) is handed through by the NAS Emu) ControlInfo CnfFlag:=false; FollowOnFlag true: Indicates that the message(s) to be sent on the same TTI will follow NOTE 1: If the TimingInfo is not the same for messages to be sent on the same TTI, the SS shall produce an error NOTE 2: the follow on flag applies only for messages of the same SRB false: Indicates that no more message(s) will follow
RrcPdu	RRC_MSG_Request_Type		

RRC_PDU_IND

TTCN-3 Record Type			
Name	**RRC_PDU_IND**		
Comment	common ASP to receive PDUs from SRB0, SRB1 or SRB2		
Common	IndAspCommonPart_Type		CellId : identifier of the cell RoutingInfo : SRB0, SRB1, SRB2 TimingInfo : time when message has been received (frame and sub-frame number); this is handed through to the test case by the NAS emulation NOTE: normally an RRC PDU is expected in one TTI; nevertheless if it is spread over more than one TTIs TimingInfo shall refer to the end of the PDU i.e. to the last RLC PDU being received; Status : OK or RRC integrity error
RrcPdu	RRC_MSG_Indication_Type		

NASEMU_SYSTEM_PORT

TTCN-3 Port Type		
Name	**NASEMU_SYSTEM_PORT**	
Comment	NASEMU PTC: Port for Sending/Receiving data to/from the SYSTEM Interface	
out	RRC_PDU_REQ	
in	RRC_PDU_IND	

D.6 EUTRA_CommonDefs

D.6.1 Common_Types

Common_Types: Basic Type Definitions

TTCN-3 Basic Types			
HarqProcessId_Type	integer (0..14)	The values 0..7 represent the ID of HARQ process ID; val	
RedundancyVersion_Type	integer (0..3)	used in EUTRA_ASP_DrbDefs and EUTRA_ASP_Typede	
ContentionResolutionId_Type	bitstring length(48)	used in EUTRA_ASP_DrbDefs and EUTRA_ASP_Typedefs	

HarqProcessList_Type

TTCN-3 Record of Type	
Name	**HarqProcessList_Type**
Comment	list of HARQ processes: each element shall be unique
record length(0..14) of HarqProcessId_Type	

RRC_MSG_Request_Type

TTCN-3 Union Type		
Name	**RRC_MSG_Request_Type**	
Comment	DL RRC PDU on CCCH or DCCH	
Ccch	DL_CCCH_Message	
Dcch	DL_DCCH_Message	

RRC_MSG_Indication_Type

TTCN-3 Union Type		
Name	**RRC_MSG_Indication_Type**	
Comment	UL RRC PDU on CCCH or DCCH	
Ccch	UL_CCCH_Message	
Dcch	UL_DCCH_Message	

D.6.2 Common_Constants

EUTRA_CommonDefs: Constant Definitions

TTCN-3 Basic Types			
tsc_EUTRA_MaxNumberOfCells	integer	20	Maximum number of cells; in TS 36.508 in, clause 4.4.2 and 6.3.2.2 there are tables for cells being used in non-NAS and NAS test cases; in both cases less than 20 cells are listed

D.6.3 RRC_Nested_Types

RRC_Nested_Types: Basic Type Definitions

TTCN-3 Basic Types		
SiWindowLength_Type	SystemInformationBlockType1.si_WindowLength	
SiPeriodicity_Type	SchedulingInfoList[0].si_Periodicity	
M_TMSI_Type	S_TMSI.m_TMSI	
MME_GroupId_Type	RegisteredMME.mmegi	
PrioritizedBitRate_Type	LogicalChannelConfig.ul_SpecificParameters.prioritisedBitRate	
Dl_Bandwidth_Type	CarrierBandwidthEUTRA.dl_Bandwidth	
Ul_Bandwidth_Type	CarrierBandwidthEUTRA.ul_Bandwidth	
Ra_PreambleIndex_Type	RACH_ConfigDedicated.ra_PreambleIndex	
CipheringAlgorithm_Type	SecurityAlgorithmConfig.cipheringAlgorithm	
IntegrityProtAlgorithm_Type	SecurityAlgorithmConfig.integrityProtAlgorithm	
P_b_Type	PDSCH_ConfigCommon.p_b	
SearchWindowSize_Type	SystemInformationBlockType8.searchWindowSize	
SCellPathlossReferenceLinking_Type	UplinkPowerControlDedicatedSCell_r10.pathlossReferenceLinking_r10	
MAC_MainConfig_ScellDeactivationTimer_Type	MAC_MainConfig.mac_MainConfig_v1020.sCellDeactivationTimer_r10	
CrossSchedulingCarrierInfo_Type	CrossCarrierSchedulingConfig_r10.schedulingCellInfo_r10.other_r10	
NotificationIndicator_r9_Type	MBSFN_AreaInfo_r9.notificationIndicator_r9	
Mbsfn_AreaId_r9_Type	MBSFN_AreaInfo_r9.mbsfn_AreaId_r9	
LogicalChannelIdentity_r9_Type	MBMS_SessionInfo_r9.logicalChannelIdentity_r9	

D.6.4 ASP_CommonPart

Definition of ASP common parts for REQ-, CNF- and IND-ASPs

D.6.4.1 ASP_CommonPart_Definitions

D.6.4.1.1 Routing_Info

EUTRA_CommonDefs: Constant Definitions

TTCN-3 Basic Types			
tsc_MaxRB	integer	maxDRB + 3	DRBs + 3 SRBs
tsc_SRB0	integer	0	
tsc_SRB1	integer	1	
tsc_SRB2	integer	2	
tsc_DRB1	DRB_Identity	1	
tsc_DRB2	DRB_Identity	2	
tsc_DRB3	DRB_Identity	3	
tsc_DRB4	DRB_Identity	4	
tsc_DRB5	DRB_Identity	5	
tsc_DRB6	DRB_Identity	6	
tsc_DRB7	DRB_Identity	7	
tsc_DRB8	DRB_Identity	8	

Routing_Info: Basic Type Definitions

TTCN-3 Basic Types		
SRB_Identity_Type	integer (tsc_SRB0, tsc_SRB1, tsc_SRB2)	SRB0 to be covered as well
CarrierAggregationInfo_Type	Null_Type	additional routing information for carrier aggregation; FFS

DRB_IdentityList_Type

TTCN-3 Record of Type	
Name	**DRB_IdentityList_Type**
Comment	
record of DRB_Identity	

RadioBearerId_Type

TTCN-3 Union Type		
Name	**RadioBearerId_Type**	
Comment		
Srb	SRB_Identity_Type	
Drb	DRB_Identity	
Mrb	MRB_Identity_Type	

RoutingInfo_Type

TTCN-3 Union Type		
Name	**RoutingInfo_Type**	
Comment		
None	Null_Type	
RadioBearerId	RadioBearerId_Type	

D.6.4.1.2 Timing_Info

Timing_Info: Basic Type Definitions

TTCN-3 Basic Types		
SystemFrameNumber_Type	integer (0..1023)	
SubFrameNumber_Type	integer (0..9)	

SubFrameInfo_Type

TTCN-3 Union Type		
Name	**SubFrameInfo_Type**	
Comment		
Number	SubFrameNumber_Type	
Any	Null_Type	no specific sub-frame (valid for REQ ASPs only)

SystemFrameNumberInfo_Type

TTCN-3 Union Type		
Name	**SystemFrameNumberInfo_Type**	
Comment		
Number	SystemFrameNumber_Type	
Any	Null_Type	no specific frame number (valid for REQ ASPs only)

SubFrameTiming_Type

TTCN-3 Record Type			
Name	**SubFrameTiming_Type**		
Comment			
SFN	SystemFrameNumberInfo_Type		
Subframe	SubFrameInfo_Type		

TimingInfo_Type

TTCN-3 Union Type		
Name	**TimingInfo_Type**	
Comment		
SubFrame	SubFrameTiming_Type	
Now	Null_Type	to be used in REQ ASPs when there is no 'activation time'
None	Null_Type	only to be used in SYSTEM_CTRL_CNF but not for EnquireTiming

D.6.4.2 REQ_ASP_CommonPart

ReqAspControlInfo_Type

TTCN-3 Record Type			
Name	**ReqAspControlInfo_Type**		
Comment			
CnfFlag	boolean		true => SS shall send CNF: when the REQ is with no timing information (no activation time), SS shall send the confirmation when the configuration is done, i.e. when the test case may continue. Example: when there is a configuration follow by a send event it shall not be necessary to have a wait timer in between but the CNF triggers the send event. If there are other triggers e.g. like the UE sending a message, CnfFlag shall be set to false by the test case to avoid racing conditions with the CNF and the signalling message. When there is an activation time SS shall send the CNF after the configuration has been scheduled; that means SS shall not wait until the activation time has been expired.
FollowOnFlag	boolean		false => no further (related) information true: further related information will be sent to SS (semantics depending on respective ASP)

ReqAspCommonPart_Type

TTCN-3 Record Type			
Name	**ReqAspCommonPart_Type**		
Comment			
CellId	EUTRA_CellId_Type		
RoutingInfo	RoutingInfo_Type		
TimingInfo	TimingInfo_Type		
ControlInfo	ReqAspControlInfo_Type		
CA_Info	CarrierAggregationInfo_Type	opt	place holder for additional routing information for carrier aggregation

D.6.4.3 CNF_ASP_CommonPart

ConfirmationResult_Type

TTCN-3 Union Type		
Name	**ConfirmationResult_Type**	
Comment		
Success	Null_Type	
Error	integer	may contain SS specific error code; this will not be evaluated by TTCN

CnfAspCommonPart_Type

TTCN-3 Record Type			
Name	**CnfAspCommonPart_Type**		
Comment			
CellId	EUTRA_CellId_Type		
RoutingInfo	RoutingInfo_Type		
TimingInfo	TimingInfo_Type		
Result	ConfirmationResult_Type		

D.6.4.4 IND_ASP_CommonPart

IntegrityErrorIndication_Type

TTCN-3 Record Type			
Name	**IntegrityErrorIndication_Type**		
Comment			
Nas	boolean		NAS Integrity: set to true when received MAC does not match calculated MAC
Pdcp	boolean		PDCP Integrity: set to true when received MAC does not match calculated MAC

ErrorIndication_Type

TTCN-3 Record Type			
Name	**ErrorIndication_Type**		
Comment			
Integrity	IntegrityErrorIndication_Type		Integrity error: received MAC does not match calculated MAC
System	integer		any other error: may be SS specific error code; this will not be evaluated by TTCN; e.g. an error shall be raised when the UE requests retransmission of an RLC PDU

IndicationStatus_Type

TTCN-3 Union Type		
Name	**IndicationStatus_Type**	
Comment		
Ok	Null_Type	
Error	ErrorIndication_Type	

IndAspCommonPart_Type

TTCN-3 Record Type			
Name	**IndAspCommonPart_Type**		
Comment			
CellId	EUTRA_CellId_Type		
RoutingInfo	RoutingInfo_Type		
TimingInfo	TimingInfo_Type		
Status	IndicationStatus_Type		
CA_Info	CarrierAggregationInfo_Type	opt	place holder for additional routing information for carrier aggregation

D.6.5 CA_CommonDefs

Common definitions for carrier aggregation needed for configuration of the SS (EUTRA_ASP_TypeDefs) as well as for MAC test cases (EUTRA_ASP_DrbDefs)

CA_CommonDefs: Basic Type Definitions

TTCN-3 Basic Types		
MAC_CTRL_ScellActDeact_Type	ScellBitMap_Type	36.321 clause 6.1.3.8

ScellBitMap_Type

TTCN-3 Record Type			
Name	**ScellBitMap_Type**		
Comment			
Reserved	B1_Type		LSBit Reserved. Shall be set to 0
Value	B7_Type		7 MSB bits the C Fields C7 to C1. 1 => the corresponding Scell is Active 0 => Inactive

PH_Record_Type

TTCN-3 Record Type			
Name	**PH_Record_Type**		
Comment	36.321 clause 6.1.3.6a		
P_Bit	B1_Type		P bit: 1 indicates the UE applies power backoff due to power management
V_Bit	B1_Type		V bit: Indicates if the PH value is based on a real transmission or a reference format. For Type 1 PH, V=0 indicates real transmission on PUSCH and V=1 indicates that a PUSCH reference format is used
Valve	B6_Type		The power headroom level. Ph Type 2 (if configured) for Pcell and Type 1 for Pcell and Scell
Reserved	B2_Type	opt	2 reservid bits. Present if V=1
PCMaxc	B6_Type	opt	Present if V=1

PH_RecordList_Type

TTCN-3 Record of Type	
Name	**PH_RecordList_Type**
Comment	If simultaneousPUCCH-PUSCH is not configured at least oneType 1 PH record for Pcell is present. Additional one record per Scell for which respective 'C' bit is set as 1. If simultaneousPUCCH-PUSCH is configured then one PH Type 2 record for P cell followed by PH Type 1 record for P cell is present. Additional one record per Scell for which respective 'C' bit is set as 1
record length(1..9) of PH_Record_Type	

MAC_CTRL_ExtPowerHeadRoom_Type

TTCN-3 Record Type			
Name	**MAC_CTRL_ExtPowerHeadRoom_Type**		
Comment			
EPH_Octet1	ScellBitMap_Type		
PH_RecordList	PH_RecordList_Type		At least one record for Pcell is present. Additional one record per Scell for which respective 'C' bit is set as 1

D.6.6 MBMS_CommonDefs

Common definitions for MBMS needed for configuration of the SS

MBMS_CommonDefs: Basic Type Definitions

TTCN-3 Basic Types		
Pmch_InfoIndex_Type	integer (0..maxPMCH_PerMBSFN)	

MRB_Identity_Type

TTCN-3 Record Type			
Name	**MRB_Identity_Type**		
Comment	MTCH is uniquely identified by: - the logicalChannelIdentity in the mbms-SessionInfoList-r9 - the MBSFN area identity, - the MCH index in the pmch-InfoList-r9		
Mbsfn_AreaId	Mbsfn_AreaId_r9_Type		
PmchLogicalChannel	PmchLogicalChannel_Type		

PmchLogicalChannel_Type

TTCN-3 Record Type			
Name	**PmchLogicalChannel_Type**		
Comment			
Pmch_InfoIndex	Pmch_InfoIndex_Type		
LogicalChannelIdentity	LogicalChannelIdentity_r9_Type		

D.7 CDMA2000_ASP_TypeDefs

D.7.1 CDMA2000_Common

Common definitions for CDMA2000 and CDMA2000 ASPs

D.7.1.1 CDMA2000_SystemContants

CDMA2000_ASP_TypeDefs: Constant Definitions

TTCN-3 Basic Types			
tsc_CDMA2000_MaxNumberOfCells	integer	8	Maximum number of CDMA2000 cells; in TS 36.508 in, clause 6.3.1.5 and 6.3.1.6 define 4 cells each for HRPD and 1XRTT; hence total is 8

D.7.1.2 CDMA2000_Routing

CDMA2000_Routing: Basic Type Definitions

TTCN-3 Basic Types		
RLP_FlowId_Type	integer (0..30)	As per S.0024, clause 4.8.2.10 both MaxNumRLPFlowsFwd and MaxNumRLPFlowsRvs need to be in the range of 0x06(6) to 0x1F(31) As per X.S007 clause 10, the PDN ID and Flow ID identify a flow

RLP_FlowIdList_Type

TTCN-3 Record of Type	
Name	**RLP_FlowIdList_Type**
Comment	
record of RLP_FlowId_Type	

CDMA2000_RoutingInfo_Type

TTCN-3 Union Type		
Name	**CDMA2000_RoutingInfo_Type**	
Comment		
None	Null_Type	
RLP_FlowId	RLP_FlowId_Type	

D.7.1.3 CDMA2000_TimingInfo

CDMA2000_TimingInfo: Basic Type Definitions

TTCN-3 Basic Types		
HRPD_FrameNumber_Type	integer	CDMA system time specified in units of 16 slots i.e. 26.66 ms.
RTT1X_FrameNumber_Type	integer	CDMA System Time, in integer multiples of 20 ms

HRPD_SubFrameInfo_Type

TTCN-3 Union Type		
Name	**HRPD_SubFrameInfo_Type**	
Comment		
Number	SubFrameNumber_Type	
Any	Null_Type	no specific sub-frame (valid for REQ ASPs only)

HRPD_Frame_Type

TTCN-3 Union Type		
Name	**HRPD_Frame_Type**	
Comment		
Number	HRPD_FrameNumber_Type	
Any	Null_Type	no specific TimeStamp (valid for REQ ASPs only)

RTT1X_Frame_Type

TTCN-3 Union Type			
Name	**RTT1X_Frame_Type**		
Comment			
Number	RTT1X_FrameNumber_Type		
Any	Null_Type	no specific TimeStamp (valid for REQ ASPs only)	

HRPD_SubFrameTiming_Type

TTCN-3 Record Type			
Name	**HRPD_SubFrameTiming_Type**		
Comment			
Frame	HRPD_Frame_Type		
Subframe	HRPD_SubFrameInfo_Type		

CDMA2000_SubFrameTiming_Type

TTCN-3 Union Type		
Name	**CDMA2000_SubFrameTiming_Type**	
Comment		
HRPD	HRPD_SubFrameTiming_Type	HRPD Timing
RTT1X	RTT1X_Frame_Type	RTT1X Timing specified in terms of Frames only

CDMA2000_TimingInfo_Type

TTCN-3 Union Type		
Name	**CDMA2000_TimingInfo_Type**	
Comment		
SubFrame	CDMA2000_SubFrameTiming_Type	
Now	Null_Type	to be used in REQ ASPs when there is no 'activation time'
None	Null_Type	only to be used in SYSTEM_CTRL_CNF but not for EnquireTiming

D.7.1.4 CDMA2000_ReqAspCommonPart

CDMA2000_ReqAspControlInfo_Type

TTCN-3 Record Type			
Name	**CDMA2000_ReqAspControlInfo_Type**		
Comment			
CnfFlag	boolean		true => SS shall send CNF: when the REQ is with no timing information (no activation time), SS shall send the confirmation when the configuration is done, i.e. when the test case may continue. Example: when there is a configuration follow by a send event it shall not be necessary to have a wait timer in between but the CNF triggers the send event or system Command. If there are other triggers e.g. like the UE sending a message, CnfFlag shall be set to false by the test case to avoid racing conditions with the CNF and the signalling message. When there is an activation time SS shall send the CNF after the configuration has been scheduled; that means SS shall not wait until the activation time has been expired.
FollowOnFlag	boolean		false => no further (related) information true: further related information will be sent to SS ; Currently this value is not foreseen to be used.

CDMA2000_ReqAspCommonPart_Type

TTCN-3 Record Type			
Name	**CDMA2000_ReqAspCommonPart_Type**		
Comment			
CellId	CDMA2000_CellId_Type		
RoutingInfo	CDMA2000_RoutingInfo_Type		
TimingInfo	CDMA2000_TimingInfo_Type		
ControlInfo	CDMA2000_ReqAspControlInfo_Type		

D.7.1.5 CDMA2000_IndAspCommonPart

CDMA2000_ErrorIndication_Type

TTCN-3 Record Type			
Name	**CDMA2000_ErrorIndication_Type**		
Comment			
System	integer		any other error: may be SS specific error code; this will not be evaluated by TTCN; e.g. an error shall be raised when the UE requests retransmission of an RLC PDU

CDMA2000_IndicationStatus_Type

TTCN-3 Union Type		
Name	**CDMA2000_IndicationStatus_Type**	
Comment		
Ok	Null_Type	
Error	CDMA2000_ErrorIndication_Type	

CDMA2000_IndAspCommonPart_Type

TTCN-3 Record Type			
Name	**CDMA2000_IndAspCommonPart_Type**		
Comment			
CellId	CDMA2000_CellId_Type		
RoutingInfo	CDMA2000_RoutingInfo_Type		
TimingInfo	CDMA2000_TimingInfo_Type		
Status	CDMA2000_IndicationStatus_Type		

D.7.1.6 CDMA2000_CnfAspCommonPart

CDMA2000_ConfirmationResult_Type

TTCN-3 Union Type		
Name	**CDMA2000_ConfirmationResult_Type**	
Comment		
Success	Null_Type	
Error	integer	may contain SS specific error code; this will not be evaluated by TTCN

CDMA2000_CnfAspCommonPart_Type

TTCN-3 Record Type			
Name	**CDMA2000_CnfAspCommonPart_Type**		
Comment			
CellId	CDMA2000_CellId_Type		
RoutingInfo	CDMA2000_RoutingInfo_Type		
TimingInfo	CDMA2000_TimingInfo_Type		
Result	CDMA2000_ConfirmationResult_Type		Similar definition as EUTRA

D.7.2 CDMA2000_PowerLevel

CDMA2000_ASP_TypeDefs: Constant Definitions

TTCN-3 Basic Types			
tsc_CDMA2000_Attenuation_Off	CDMA2000_Attenuation_Type	{Off:=true}	

CDMA2000_PowerLevel: Basic Type Definitions

TTCN-3 Basic Types		
CDMA2000_InitialAttenuation_Type	CDMA2000_Attenuation_Type (tsc_CDMA2000_Attenuation_Off)	Attenuation restricted to 'Off'

CDMA2000_Attenuation_Type

TTCN-3 Union Type		
Name	**CDMA2000_Attenuation_Type**	
Comment	attenuation of the reference power	
Value	Attenuation_Type	cell power reference power reduced by the given attenuation (value is in dB)
Off	Null_Type	for non suitable off cell we specify an explicit "Off" value here

CDMA2000_CellAttenuation_Type

TTCN-3 Record Type			
Name	**CDMA2000_CellAttenuation_Type**		
Comment			
CellId	CDMA2000_CellId_Type		
Attenuation	CDMA2000_Attenuation_Type		

CDMA2000_CellAttenuationList_Type

TTCN-3 Record of Type	
Name	**CDMA2000_CellAttenuationList_Type**
Comment	
record length(1..tsc_CDMA2000_MaxNumberOfCells) of CDMA2000_CellAttenuation_Type	

CDMA2000_AbsoluteCellPower_Type

TTCN-3 Record Type			
Name	**CDMA2000_AbsoluteCellPower_Type**		
Comment			
Powerloc	Powerloc_Type		TTCN writer Shall set same vale in all cells; SS shall have only one AWGN channel for all configured cells per frequency SS shall create a AWGN channel in first cell per frequency and ignore this in later cell creations on the same frequency; i.e. this channel is created along once for Cell 15 or 16 and one each per 17 and 19 similarly for RTT1X once for 19 or 20 and one each per 21 and 22
Powerlor	Powerlor_Type		Total Transmit power in cell before attenuation
PilotOffset	PilotOffset_Type		Default -7

CDMA2000_InitialCellPower_Type

TTCN-3 Record Type			
Name	**CDMA2000_InitialCellPower_Type**		
Comment			
MaxReferencePower	CDMA2000_AbsoluteCellPower_Type		maximum value of cell reference power corresponding to Max Ior/Ioc in power level table; a cell is initialised with this reference power; its value is the upper bound of the cell power during the test case
Attenuation	CDMA2000_InitialAttenuation_Type		initial attenuation Cell is off

D.7.3 CDMA2000_Data

Data primitives sent/received at CDMA2000_RLP_FLOW_PORT

CDMA2000_Data: Basic Type Definitions

TTCN-3 Basic Types		
RLP_SDU_Type	octetstring	

RLP_SDUList_Type

TTCN-3 Record of Type	
Name	**RLP_SDUList_Type**
Comment	
record of RLP_SDU_Type	

CDMA2000_U_PlaneData_Type

TTCN-3 Union Type		
Name	**CDMA2000_U_PlaneData_Type**	
Comment	Union structure is provided for future possible enhancements	
RLP_Sdu	RLP_SDUList_Type	RLP SDU's

RLPFlow_DataPerSubframe_DL_Type

TTCN-3 Record Type			
Name	**RLPFlow_DataPerSubframe_DL_Type**		
Comment	common definition for one or several SDUs to be sent in the subframe given by the subframe offset; SS shall raise an error indication (using SYSTEM_IND) when that is not possible NOTE 1: For RLP the data may be spread over more than one subframe ; the TTCN implementation is responsible to calculate appropriate offsets accordingly		
SubframeOffset	integer		subframe offset relative to the absolute timing information given in the common part of the ASP; NOTE : if a RLP SDU takes more than one subframe, SubframeOffset specifies the first TTI
SduList	CDMA2000_U_PlaneData_Type		list of PDUs/SDUs to be sent in one subframe

RLPFlow_DataPerSubframeList_DL_Type

TTCN-3 Record of Type	
Name	**RLPFlow_DataPerSubframeList_DL_Type**
Comment	list of user plane data to be sent in sub-frames given by the SubframeOffset in the single elements of the list; Timing: the start time for the whole sequence is given by the timing info of the ASP (common information); the timing for the respective data pdus is given by the SubframeOffset relative to the common timing info; design consideration: repetitions of this sequence are not foreseen (in which case the subframe offset could not be related to the timing info of the ASP)
record of RLPFlow_DataPerSubframe_DL_Type	

CDMA2000_U_Plane_Request_Type

TTCN-3 Record Type			
Name	**CDMA2000_U_Plane_Request_Type**		
Comment	NOTE: formal type definition to allow later enhancements; CDMA2000_U_Plane_Request_Type defines a sequence of subframes in which data shall be sent		
SubframeDataList	RLPFlow_DataPerSubframeList_DL_Type		

D.7.4 CDMA2000_CellConfiguration

HRPD_CellParameters_Type

TTCN-3 Record Type			
Name	**HRPD_CellParameters_Type**		
Comment	Parameters specific to HRPD		
SystemType	SystemType_Type		Specifies the system type of Channel As per Table 13.1-1 of C.S0024-C v2.0 0, 1, 2 are defined values and 3 to 255 are reserved
SubNetMask	B8_Type		7.11.6.2.2 of C.S0024-C v2.0 Sector Subnet identifier set this field to the number of consecutive 1s in the subnet mask of the subnet to which this sector belongs
ColorCode	ColorCode_Type		7.11.6.2.1 of C.S0024-C v2.0 set to the colour code corresponding to this sector part of QuickConfig Over head message
CountryCode	MCC_Type		7.11.6.2.2 of C.S0024-C v2.0 three-digit BCD (binary coded decimal) encoded representation of the Mobile Country Code associated with this sector
OpenLoopAdjust	OpenLoopAdjust_Type		9.4.6.2.6 of C.S0024-C v2.0; The negative of the nominal power to be used by access terminals in the open loop power estimate, expressed as an unsigned value in units of 1 dB. The value used by the access terminal is -1 times the value of this field
ReverseRateLimit	ReverseRateLimit_Type		Table 9.9.6.3-2 of C.S0024-C v2.0; set to the highest data rate that the access terminal is allowed to use on the Reverse Traffic Channel
MACIndex	ReverseLinkMACIndex_Type		C.S0024-C v2.0 clause 12.4.1.3.2.2 Forward channel MAC is derived from this based on table 12.4.1.3.2.2-1
PacketApp	PacketApplication_Type		Multi Flow Packet Application to be used Enhanced Multi-Flow Packet Application subtype(0x0009) defined in C.S0087-A v2.0 or as per C.S0087-A v2.0, clause 2.3 the UE Shall not propose AEMPA during stream protocol negotiation (0xFFFE) in C.R1001
ControlChannelRate	ControlChannelRate_Type		MAC index to be used for the Control Channel
PDN_Id	PDN_Id_Type		PDN_ID of the bearer
PDN_Address	PDN_Address_Type		the PDN Address to be provided to the UE in VSNCP ConfigAck
UATI	UATI_Type		UATI to be Assigned to the UE

RTT1X_CellParameters_Type

TTCN-3 Record Type			
Name	**RTT1X_CellParameters_Type**		
Comment	Parameters specific to 1XRTT		
Reg_Zone	B12_Type		C.S0005-F v1.0 clause 3.7.2.3.2.1 and 2.6.5.1.5 Registration Zone of the base station Reg_Zone, SID and NID shall be unique for each base station
Base_Class	B4_Type		C.S0005-F v1.0 clause 3.7.2.3.2.1 Base station class. The base station shall set this field as follows: For Band Class 1 and 4, the base station shall set this field to '0001'; otherwise, the base station shall set this field to '0000'
MCC	B10_Type		3.7.2.3.2.13 and 2.3.1.1 of C.S0005-F v1.0 encoding is int2bit (100*D1+10*D2+D3 -111,10) with digit 0 being mapped to 10 binary representation of the Mobile Country Code associated with this sector
IMSI_11_12	B7_Type		3.7.2.3.2.13 and 2.3.1.2 of C.S0005-F v1.0 encoding is int2bit (10*D2+D3 -11,7) with digit 0 being mapped to 10 binary representation of the Mobile Network Code associated with this sector
TMSI	TMSI_Type		the TMSI to be assigned to the MS
ProtRev	ProtRev_Type		Protocol Revision
Min_ProtRev	ProtRev_Type		the minimum protocol revision supported by Base station
Sig_EncryptionMode	EncryptionMode_Type		Encryption mode for Common and dedicated signalling
USerInfo_EncryptionMode	EncryptionMode_Type		User information Encryption mode

ModeSpecificCellParams_Type

TTCN-3 Union Type		
Name	**ModeSpecificCellParams_Type**	
Comment		
RTT1X	RTT1X_CellParameters_Type	
HRPD	HRPD_CellParameters_Type	

CDMA2000_CellParameters_Type

TTCN-3 Record Type			
Name	**CDMA2000_CellParameters_Type**		
Comment			
Type	CDMA2K_Type		Gives if cell is EHRPD or RTT1X
CarrierFreq	CarrierFreqCDMA2000_Type		Contains bandclass (5 bit) and arfcn i.e. 11 bit channel number
PhysCellId	PhysCellIdCDMA2000_Type		PN offset of pilot 0..511
CellGlobalId	CellGlobalIdCDMA2000_Type		Contains the 128 bit cell ID for HRPD and 47 bit cell ID for 1XRTT
SearchWindow	SearchWindowSizeRecord_Type		contains the SearchWindow for Active, Neighbour & Remaining cells

CDMA2000_CellConfigInfo_Type

TTCN-3 Record Type			
Name	**CDMA2000_CellConfigInfo_Type**		
Comment			
CellParameters	CDMA2000_CellParameters_Type		Parameters common to HRPD and RTT1X
InitialCellPower	CDMA2000_InitialCellPower_Type		Power level parameters
ModeSpecificCellParams	ModeSpecificCellParams_Type		Parameters specific to RTT1X or HRPD

CDMA2000_CellConfigRequest_Type

TTCN-3 Union Type		
Name	**CDMA2000_CellConfigRequest_Type**	
Comment		
AddOrReconfigure	CDMA2000_CellConfigInfo_Type	for cell configuration: CellId : identifier of the cell to be configured RoutingInfo : None TimingInfo : Now (for initial configuration and for reconfiguration in general) ControlInfo : CnfFlag:=true; FollowOnFlag:=false (in general)
Release	Null_Type	to remove a cell completely - CellId : identifier of the cell to be released; eutra_Cell_NonSpecific, in case all cells shall be released RoutingInfo : None TimingInfo : Now ControlInfo : CnfFlag:=true; FollowOnFlag:=false (in general)

D.7.5 CDMA2000_HRPD

D.7.5.1 CDMA2000_PDN_Defs

CDMA2000_PDN_Defs: Basic Type Definitions

TTCN-3 Basic Types		
CDMA2000_AttachType	O3_Type	Defined values: 1: Initial Attach to a PDN, 3: Handover attach to a PDN. Rest undefined and not used
IPv4_Address_Type	O4_Type	represents the IPv4 address as per 24.301 clause 9.9.4.9
IPv6_Address_Type	O8_Type	represents the IPv6 interface identifier as per 24.301 clause 9.9.4.9
PDN_Id_Type	B4_Type	indicates the PDN Id associated with the bearer PDN Identifier of the PDN for which the user data is sent. it is the low order 4 bits of, containing the PDN-ID identifies the PDN (i.e. one per default bearer) Reference X.S0057-E v1.0 clause 10.1.5; gives only low order 4 bits, and high order 4 bits are added as all zero's
Flow_Id_Type	B4_Type	the lower 4 bits of the Flow Identifier, as defined in Table 15 of X.S0057-E v1.0 identify each reservation that is requested to be added or deleted the complete 8 bit flow Identifier is formed by PDN-ID and Flow-Id

IPv4v6_Address_Type

TTCN-3 Record Type			
Name	**IPv4v6_Address_Type**		
Comment			
IPv4	IPv4_Address_Type		IP v4 address to be allocated
IPv6	IPv6_Address_Type		IP v6 interface identifier to be allocated

PDN_Address_Type

TTCN-3 Union Type		
Name	**PDN_Address_Type**	
Comment	based on 24.301 cl. 9.9.4.9	
IPv4	IPv4_Address_Type	only IP v4 address to be allocated
IPv6	IPv6_Address_Type	only IP v6 interface identifier to be allocated
IPv4v6	IPv4v6_Address_Type	both IP v4 address and IP v6 interface identifier to be allocated

Flow_IdList_Type

TTCN-3 Record of Type	
Name	**Flow_IdList_Type**
Comment	
record of Flow_Id_Type	

D.7.5.2 CDMA2000_SubProtocols

LCP_DetachInit_Type

TTCN-3 Enumerated Type	
Name	**LCP_DetachInit_Type**
Comment	
networkInitiated	X.S0057-E v1.0 clause 11.2
UEInitiated	X.S0057-E v1.0 clause 11.1.2

DHCP_Ind_Type

TTCN-3 Record Type			
Name	**DHCP_Ind_Type**		
Comment			
RapidCommit	boolean		indicates if Rapid Comit option of DHCP is used

UATI104_Type

TTCN-3 Union Type		
Name	**UATI104_Type**	
Comment		
Value	O13_Type	
None	Null_Type	

UATI_Type

TTCN-3 Record Type			
Name	**UATI_Type**		
Comment			
UATI24	O3_Type		Represents UATI(0:23), as per clause 6.3.7.2.2 of C.S0024-C v2.0
UATI104	UATI104_Type		Represents UATI(127:24), as per clause 6.3.7.2.2 of C.S0024-C v2.0 if has to be assigned

D.7.5.3 HRPD_Indications

RegAndDefBearerEstInd_Type

TTCN-3 Record Type			
Name	**RegAndDefBearerEstInd_Type**		
Comment			
UATI_AssignmentCmpl	Null_Type		UATIAssignment is received UATIComplete is received
InitialChAssignCmpl	Null_Type		Initial Traffic/Extended Channel/AlternateLink(Pre-registration) Assignment procedure started UE has sent ConnectionRequest/AlternateLinkOpen message Traffic/Extended Channel /AlternateLink(Pre-registration) assignment is completedUE has sent TrafficChannelComplete(Route update protocol)/ AlternateLinkOpenComplete. In the registration and Default bearer establishment procedure, UE initiated Channel/Alternate Link can be released and configured, only first assignment is reported.
SCP_ConfigCmpl	Null_Type		SCP (Session Configuration Protocol)ConfigurationRequest message is received SCP (Session Configuration Protocol)ConfigurationResponse message is transmitted
Stream_ConfigCmpl	Null_Type		Stream Protocol Configuration ConfigurationRequest message is received Stream Protocol Configuration ConfigurationResponse message is transmitted
EMPA_MMPA_ConfigCmpl	Null_Type		Enhanced Multi flow/Multi flow Packet application ConfigurationRequest message is received Enhanced Multi flow/Multi flow Packet application ConfigurationComplete message is received EMPA ConfigurationResponse message or MMPA ConfigurationResponse is received corresponding to steps 30A TO 30C of table 4.5.2B.3-2
SessionNegotiationCmpl	Null_Type	opt	SS initiated Session Negotiation has started; Session Negotiation has completed
DeviceAuthCmpl	Null_Type	opt	Device level authentication has started; Device level authentication has completed
LocationUpdateCmpl	Null_Type	opt	Location Update started; Location Update completed
EAP_AKA_Cmpl	Null_Type		Improved Extensible Authentication protocol for Authentication and Key agreement started RFC 5448 * Message flow in X.S0057-E v1.0 clause 5.2.5.1 Authentication and Key agreement Completed optionally After entering PPP LCP Open State, PPP Version Capability Indication and/or Max PPP Inactivity Timer negotiation are completed
VSNCP_ConfigCmpl	Null_Type		PDN connection establishment started and UE has sent PPP Vendor Specific Network Control Protocol Configuration Request PDN Connection and default bearer establishment is completed with possible IPV4 address (optional) and or IPv6 interface ID (Mandatory) provided Attach type shall be Handover Attach
DHCP_ConfigCmpl	DHCP_Ind_Type	opt	UE and SS decided for IPv4 address allocation by DHCP IPv4 address allocation completed by UE and SS Completion of IP Address through DHCP
ICMPv6_ConfigCmpl	Null_Type	opt	UE optionally sent IPv6 stateless autoconfiguration Router solicitation message and SS has responded with IPv6 Router Advertisement message

HRPD_ZoneRegistrationInd_Type

TTCN-3 Record Type			
Name	**HRPD_ZoneRegistrationInd_Type**		
Comment			
UATI_AssignmentCmpl	Null_Type		UATIAssignment is received UATIComplete is received
EAP_AKA_Cmpl	Null_Type		Improved Extensible Authentication protocol for Authentication and Key agreement started RFC 5448 Message flow in X.S0057-E v1.0 clause 5.2.5.1 Authentication and Key agreement Completed optionally After entering PPP LCP Open State, PPP Version Capability Indication and/or Max PPP Inactivity Timer negotiation are completed
VSNCP_ConfigCmpl	Null_Type		PDN connection establishment started and UE has sent PPP Vendor Specific Network Control Protocol Configuration Request PDN Connection and default bearer establishment is completed with possible IPV4 address (optional) and or IPv6 interface ID (Mandatory) provided Attach type shall be Handover Attach
DHCP_ConfigCmpl	DHCP_Ind_Type	opt	UE and SS decided for IPv4 address allocation by DHCP IPv4 address allocation completed by UE and SS Completion of IP Address through DHCP
ICMPv6_ConfigCmpl	Null_Type	opt	UE optionally sent ICMPv6 Router solicitation message and SS has responded with IPv6 Router Advertisement message

DedicatedBearerRelInd_Type

TTCN-3 Record Type			
Name	**DedicatedBearerRelInd_Type**		
Comment			
VSNP_TerminateCmpl	Null_Type		Dedicated bearers are deactivated/ released
SCP_ReleaseCmpl	Null_Type	opt	Session Configuration Protocol to release the reservations exclusively associated with the deleted bearer Reservation deletion completed

DefaultBearerRelDetachInd_Type

TTCN-3 Record Type			
Name	**DefaultBearerRelDetachInd_Type**		
Comment			
VSNCP_TerminateCmpl	Null_Type	opt	To Released configured default bearer and hence associated Dedicated bearer X.S0057-E v1.0 clause 11.3 and 11.1.1 To indicate the default bearer is released
LCP_TerminateCmpl	Null_Type		To detach the UE X.S0057-E v1.0 clause 11.2 Detach completed

MobilityFromEUTRACmpl_Type

TTCN-3 Record Type			
Name	**MobilityFromEUTRACmpl_Type**		
Comment			
ConnectionReqRcvd	Null_Type		Received Tunneled HRPD Connection Request Message
RouteUpdateInd	Null_Type		Received Tunneled HRPD Route Update Message
TrafficChCmplRcvd	Null_Type		Received HRPD Traffic Channel Complete in HRPD RAT, after transmission of tunneled Traffic Channel Assignment, HRPD Silence Parameters and HRPD Open Loop Parameters

AdditionalDefBearerEstInd_Type

TTCN-3 Record Type			
Name	**AdditionalDefBearerEstInd_Type**		
Comment			
VSNCP_ConfigCmpl	Null_Type		PDN connection establishment started and UE has sent PPP Vendor Specific Network Control Protocol Configuration Request PDN Connection and default bearer establishment is completed with possible IPV4 address (optional) and or IPv6 interface ID (Mandatory) provided Attach type shall be Handover Attach(pre-registration) or Initial Attach (if normal registration in HRPD cell)
DHCP_ConfigCmpl	DHCP_Ind_Type	opt	UE and SS decided for IPv4 address allocation by DHCP IPv4 address allocation completed by UE and SS Completion of IP Address through DHCP
ICMPv6_ConfigCmpl	Null_Type	opt	UE optionally sent ICMPv6 Router solicitation message and SS has responded with IPv6 Router Advertisement message

HRPD_SystemIndication_Type

TTCN-3 Union Type		
Name	**HRPD_SystemIndication_Type**	
Comment		
Error	Null_Type	Used by SS to indicate any error; the Actual Error types reported in ASP common part in CDMA2000_IndicationStatus_Type
InitialAccessProbeRcvd	Null_Type	Initial Access probe is received;
RegAndDefBearerEstInd	RegAndDefBearerEstInd_Type	UE has successfully performed registration and default bearer establishment
DedicatedBearerEstInd	Null_Type	Vendor specific network protocXol (RFC 3772) procedures to re-establish Dedicated bearer as defined in S.0057 clause 5.5.3.1 (BCM is MS/NW) or clause 5.5.4.1.1 (BCM = MS-Only) Bearer Configuration Mode Dedicated bearers are (re) established
DedicatedBearerRelInd	DedicatedBearerRelInd_Type	To indicate the Dedicated bearer is released
DefaultBearerRelDetachInd	DefaultBearerRelDetachInd_Type	To Release configured default bearer and hence associated Dedicated bearer X.S0057-E v1.0 clause 11.3 and 11.1.1 Dedicated bearers are deactivated/released To detach the UE X.S0057-E v1.0 clause 11.2 Detach completed
MovedToDormantMode	Null_Type	The channels are released and UE is moved to PPP dormant mode/Air interface Idle.
MobilityFromEUTRACmpl	MobilityFromEUTRACmpl_Type	To confirm that Handover from EUTRAN is completed by receiving Traffic Channel Complete and the MessageSequence is same as in Traffic Channel Assignment
AdditionalDefBearerEstInd	AdditionalDefBearerEstInd_Type	UE has successfully performed additional default bearer establishment (additional PDN)
HRPD_ZoneRegistrationInd	HRPD_ZoneRegistrationInd_Type	Initially pre-registered UE detects change in HRPD Zone ID in SIB and hence updates registration

D.7.5.4 HRPD_Commands

HRPD_UE_InitStateType

TTCN-3 Enumerated Type	
Name	**HRPD_UE_InitStateType**
Comment	HRPD UE states as defined in C.S0057-E v1.0 clause 3.1
idle_Null	In the Inactive/Null State, 1. there is no physical traffic channel between the UE and the eAN, and no connection exists between the eAN and the ePCF 2. no PPP link between the UE and the HSGW . 3. The UE may have a Universal Access Terminal Identifier (UATI) that has been assigned by an eHRPD eAN
dormant	In the Dormant State, 1. no physical traffic channel exists between the UE and the eAN and no connection exists between the eAN and the ePCF. 2. PPP link between the UE and the HSGW 3. eHRPD DORMANT state equates to the "idle" state referred to in TS 23.402
active_Connected	In the Active/Connected State, 1. a physical traffic channel exists between the UE and the eAN over which data may be sent. A connection exists between the eAN and the ePCF, and between the ePCF and the HSGW, 2. there is a PPP link between the UE and the HSGW
preregister	The UE is performing pre-register though a different Access network

RegAndDefBearerEst_Type

TTCN-3 Record Type			
Name	**RegAndDefBearerEst_Type**		
Comment			
InitState	HRPD_UE_InitStateType		
RLP_FlowId	RLP_FlowId_Type		Associated RLP Flow ID
AttachType	CDMA2000_AttachType		The Attach Type to be expected in VSNCP procedure

DefaultBearerRelDetach_Type

TTCN-3 Record Type			
Name	**DefaultBearerRelDetach_Type**		
Comment			
InitState	HRPD_UE_InitStateType		
PDN_Id	PDN_Id_Type		PDN_ID of the bearer
RLP_FlowId	RLP_FlowId_Type		Associated RLP Folw ID
UE_NW_Initiated	LCP_DetachInit_Type		If initiated by UE or Network

DedicatedBearerEstRel_Type

TTCN-3 Record Type			
Name	**DedicatedBearerEstRel_Type**		
Comment			
InitState	HRPD_UE_InitStateType		PPP and Air Interface state of UE when the procedure is being executed
AssociatedDefaultBearer	PDN_Id_Type		the PDN ID of the associated default bearer; Gives the APN with which additional Dedicated Bearer needs to be established
Flow_Ids	Flow_IdList_Type		Flow_ID's of the multiple dedicated bearers to be Activated/Deactivated
RLP_FlowIds	RLP_FlowIdList_Type		Associated RLP Folw ID; There is one to one association between elements in Flow_IdList_Type and RLP_FlowIdList_Type; it's a TTCN programming error otherwise

AdditionalDefBearerEst_Type

TTCN-3 Record Type			
Name	**AdditionalDefBearerEst_Type**		
Comment	used for multiple PDN connections		
InitState	HRPD_UE_InitStateType		
RLP_FlowId	RLP_FlowId_Type		Associated RLP Flow ID

HRPD_SystemCommand_Type

TTCN-3 Union Type		
Name	**HRPD_SystemCommand_Type**	
Comment		
ReportInitialAccesProbe	Null_Type	SS is expected to report any possible Access probes received on HRPD Cell; will be used in situations where UE is not expected to camp on a HRPD Cell
RegAndDefBearerEst	RegAndDefBearerEst_Type	To complete registration and establish Default bearer; Initial UE State is Idle_Null State Indications up to VSNCP protocol and possible IP signalling over DHCPv4 and/or ICMPv6 is performed At the end of procedure, UE is still in Active/Connected state (not pre-registration); SS is expected to send InitialAccessProbeRcvd(only if initial state is not Active and not pre-registration) and RegAndDefBearerEstInd as an indication for successful completion of procedure
DedicatedBearerEst	DedicatedBearerEstRel_Type	Dedicated bearers are established/Activated by VSNP/EMPA protocol; PDN ID and RLP flow ID pairs are provided for each Dedicated bearer At the end of procedure, UE is still in Active/Connected state SS is expected to send InitialAccessProbeRcvd(only if initial state is not Active) and DedicatedBearerEstInd as an indication for successful completion of procedure
MoveToDormantState	Null_Type	UE is Active_Connected state and is moved to Dormant state SS is expected to send MovedToDormantMode
MoveToActiveState	RLP_FlowIdList_Type	UE is initially Dormant state; UE is made to Move to Active_Connected State List of RLP flow Id's (associated with default + dedicated bearer), need to be established are provided SS is expected to send InitialAccessProbeRcvd
DedicatedBearerRel	DedicatedBearerEstRel_Type	Dedicated bearers are released/De-Activated by VSNP terminate and SCP release protocol; At the end of procedure, UE is still in Active/Connected state (not pre-registration) SS is expected to send InitialAccessProbeRcvd(only if initial state is not Active and not pre-registration) and DedicatedBearerRelInd as an indication for successful completion of procedure
DefaultBearerRelDetach	DefaultBearerRelDetach_Type	Default bearer is released by VSNCP terminate and SCP release protocol UE is made to detach by LCP protocol and Possible Channels are released At the end of procedure, UE is in Idle_Null state Notes: When Detach is network initiated the sequence is 1. Default bearer (and hence all associated Dedicated bearers) released by VSNCP terminate 2. UE is detached by LCP terminate procedure When Detach is UE initiated, UE may only perform LCP terminate procedure SS is expected to send InitialAccessProbeRcvd(only if initial state is not Active) and DefaultBearerRelDetachInd as an indication for successful completion of procedure
MobilityFromEUTRA	Null_Type	Prepare CDMA SS for receiving tunnelled HRPD Connection Request and Route Update tunnelled in ULHandoverPreparationTransfer Respond with GCSNA encapsulated HRPD Silence Parameters and HRPD Open Loop Parameters, HRPD Traffic Channel Assignment to be sent tunnelled in MobilityFromEUTRACommand Receive Traffic Channel Complete in the HRPD Cell; After Receiving Traffic Channel Assignment , HRPD Silence Parameters and HRPD Open Loop Parameters embedded in EUTRA message MobilityFromEUTRACommand, UE has

		Tuned to HRPD Radio and transmitted Traffic Channel Complete in the HRPD Cell SS is expected to send MobilityFromEUTRACmpl as an indication for successful completion of procedure
AdditionalDefBearerEst	AdditionalDefBearerEst_Type	To establish an additional PDN connection Initial UE State is Idle_Null State or procedure performed through pre-registration Indications up to VSNCP protocol and possible IP signalling over DHCPv4 and/or ICMPv6 is performed At the end of procedure, UE is still in Active/Connected state(not pre-registration); SS is expected to send InitialAccessProbeRcvd (only if initial state is not Active and not pre-registration) and AdditionalDefBearerEstInd as an indication for successful completion of procedure
HRPDZoneRegister	RegAndDefBearerEst_Type	To update registration by a UE already registered and established Default bearer; Initial UE State is Idle_Null State Indications up to VSNCP protocol and possible IP signalling over DHCPv4 and/or ICMPv6 is performed At the end of procedure, UE is still in Active/Connected state (not pre-registration); SS is expected to send InitialAccessProbeRcvd(only if initial state is not Active and not pre-registration) and RegAndDefBearerEstInd as an indication for successful completion of procedure

D.7.6 CDMA2000_RTT1X

D.7.6.1 RTT1X_Indications

RTT1X call flows in RTT1x cell
Expected Sequence for Attach (Power Up Attach)
1. Initial AccessProbeRcvd
2. CS_RegistrationStart(Powerup)
3. CS_RegistrationCmpl
Expected Sequence for Detach (Power Down Attach)
1. Initial AccessProbeRcvd
2. CS_RegistrationStart (PowerDown)
3. CS_RegistrationCmpl
Expected Sequence for CSFB Call Establishment
1. Initial AccessProbeRcvd
2. CS_CallEstStart (Origination/ PageResponse)
3. ChAssignCmpl (Extended Channel Assignment is sent)
4. CS_CallEstCompleted (Acknowledgement Order Sent, Service Connect sent, Service Connect Completion received, Alert Sent/Received and ConnectOrder is received)
Expected Sequence for SRVCC call handover
1. HandoffCmpl

RTT1X_CS_CallType

TTCN-3 Enumerated Type	
Name	**RTT1X_CS_CallType**
Comment	
mo	Call is UE originated
mt	Call is UE Terminated
mo_Emergency	UE originated Emergency Call

RTT1XAttachType

TTCN-3 Enumerated Type	
Name	**RTT1XAttachType**
Comment	Ref C.S005 Table 2.7.1.3.2.1-1
powerUpAttach	UE is doing Power up attach REG_Type = '0001'B; it was not previously attached
powerDownAttach	UE is doing power down attach REG_Type = '0011'B; it was previously attached
zoneBasedAttach	UE is doing Zone based attach REG_Type = '0010'B
orderedAttach	UE is doing Ordered attach REG_Type = '0101'B
OtherAttach	Any other Attach REG_Type does not equal above values

CS_RegCmplInd_Type

TTCN-3 Record Type			
Name	**CS_RegCmplInd_Type**		
Comment			
CS_RegistrationCmpl	RTT1XAttachType		CS power up/down registration is completed UE Sent Registration message and received an L2 Acknowledgement Optionally SS can perform Authentication and has sent Registration Accepted order

CS_Reg_CallCmplInd_Type

TTCN-3 Record Type			
Name	**CS_Reg_CallCmplInd_Type**		
Comment			
CS_RegistrationCmpl	RTT1XAttachType	opt	CS power up/down registration is completed; This is omit if implicit registration is done UE Sent Registration message and received an L2 Acknowledgement Optionally SS can perform Authentication and has sent Registration Accepted order UE can also do a implicit registration; i.e. reception of Origination/reconnect/CallRecovery/Page message by Base station is treated as implicit registration
CS_CallEstStarted	RTT1X_CS_CallType		Received Origination message for MO and Page Response for MT
ChAssignCmpl	Null_Type		(Extended) Channel Assignment procedure started UE has sent ConnectionRequestTraffic Extended Channel assignment is completedUE has sent TrafficChannelComplete
CS_CallEstCompleted	Null_Type		SS received Service Connect Completion(Mo) or ConnectOrder(MT) (i.e. User Accepted call)

CS_CallCmplInd_Type

TTCN-3 Record Type			
Name	**CS_CallCmplInd_Type**		
Comment			
CS_CallEstStarted	RTT1X_CS_CallType		Received Origination message for MO and Page Response for MT
ChAssignCmpl	Null_Type		(Extended) Channel Assignment procedure started completed
CS_CallEstCompleted	Null_Type		SS received Service Connect Completion(MO) or ConnectOrder(MT) (i.e. User Accepted call)
IsEmergencyCall	boolean		True indicates the established call is emergency call, false indicates a normal voice has been established

ECSFB_CallCmplInd_Type

TTCN-3 Record Type			
Name	**ECSFB_CallCmplInd_Type**		
Comment			
CS_CallEstStarted	RTT1X_CS_CallType		Received Tunneled GCSNA encapsulated Origination message for MO and Page Response for MT call
HandoffCmpl	Null_Type		indicates SS has received HandoffComplete message and the call is established
CS_CallEstCompleted	Null_Type		SS received Service Connect Completion (MO) or ConnectOrder (MT) (i.e. User Accepted call)
IsEmergencyCall	boolean		True indicates the established call is emergency call, false indicates a normal voice has been established

ECAM_CS_CallCmplInd_Type

TTCN-3 Record Type			
Name	**ECAM_CS_CallCmplInd_Type**		
Comment			
CS_TunneledCallEstStarted	RTT1X_CS_CallType		Received Tunneled GCSNA encapsulated Origination message for MO and Page Response for MT call
CS_CallEstStarted	RTT1X_CS_CallType		Received Origination message for MO and Page Response for MT
ChAssignCmpl	Null_Type		Extended Channel Assignment procedure started completed
CS_CallEstCompleted	Null_Type		SS received Service Connect (i.e User Accepted call)
IsEmergencyCall	boolean		True indicates the established call is emergency call, false indicates a normal voice has been established

ECSFB_CallRejInd_Type

TTCN-3 Record Type			
Name	**ECSFB_CallRejInd_Type**		
Comment			
CS_CallEstRejected	RTT1X_CS_CallType		SS Received tunneled 1xRTT Origination (M0)/Page Response (MT) message Respond with 1xRTT Release Order message
IsEmergencyCall	boolean		True indicates the established call is emergency call, false indicates a normal voice has been established

RTT1X_SystemIndication_Type

TTCN-3 Union Type		
Name	**RTT1X_SystemIndication_Type**	
Comment		
Error	Null_Type	Used by SS to indicate any error; the Actual Error types reported in ASP common part in CDMA2000_IndicationStatus_Type
InitialAccessProbeRcvd	Null_Type	Initial Access probe is received
CS_RegistrationCmpl	CS_RegCmplInd_Type	CS power up/down registration is completed As registration message, and possible Authentication Registration accepted order are all sent received on f/r-csch UE at end is in Idle state
CS_Reg_CallCmplInd	CS_Reg_CallCmplInd_Type	CS Registration /implicit registration and Call Indication MO or MT UE is in connected state with f/r dtch configured
CS_CallCmplInd	CS_CallCmplInd_Type	CS Call Indication MO or MT UE is in connected state with f/r dtch configured
HandoffCmpl	Null_Type	needed for SRVCC handover of an IMS voice call on LTE to 1XRTT indicates SS has received HandoffComplete message and the call is established
MovedToIdleState	Null_Type	The channels are released and UE is moved to Idle state. CS Call is released by exchange of Release order in both directions C.S0005-F v1.0 figure B3 and B4
ECSFB_CallCmplInd	ECSFB_CallCmplInd_Type	eCSFB Call Indication MO or MT UE is in connected state with f/r dtch configured
ECSFB_ECAM_CallCmplInd	ECAM_CS_CallCmplInd_Type	eCSFB ECAM based Call Indication MO or MT UE is in connected state with f/r dtch configured
ECSFB_CallRejInd	ECSFB_CallRejInd_Type	eCSFB Call Rejected MO or MT UE is not camping in 1xRTT

D.7.6.2 RTT1X_Commands

CS_Registration_Type

TTCN-3 Record Type			
Name	**CS_Registration_Type**		
Comment			
AttachType	RTT1XAttachType		
IsPreRegistration	boolean		Indicates if it is done as pre registration Value is ignored if Attach Type is Power down (Assumption detach happens only in 1XRTT cell)
RAND	B32_Type	opt	RAND [From eNB] to be included in CSFBParametersResponseCDMA2000, HandoverFromEUTRAPreparationRequest Value not present for power down registration

RTT1X_SystemCommand_Type

TTCN-3 Union Type		
Name	**RTT1X_SystemCommand_Type**	
Comment		
ReportInitialAccesProbe	Null_Type	SS is expected to report any possible Access probes received on 1XRTT Cell; will be used in situations where UE is not expected to camp on a 1XRTT Cell
CS_Registration	CS_Registration_Type	Power up attach/ power down attach in 1xRTT cell or Pre registration (Power up attach) tunnelled through a different RAT in case of pre-registration attach, the CDMA SS starts by sending mobilityParameters to be tunnelled in CSFBParametersRequestCDMA2000 SS is expected to send InitialAccessProbeRcvd (only if initial state is not pre-registration) and CS_RegistrationCmpl as an indication for successful completion of procedure
CSFB_Call	RTT1X_CS_CallType	CSFB by a (pre-)registered UE If the call Type is mt, CDMA SS sends 1x RTT GCSNA encapsulated General Page to be tunnelled in DLInformation Transfer SS is expected to send InitialAccessProbeRcvd and CS_CallCmplInd as an indication for successful completion of procedure
CS_Reg_CSFB_Call	RTT1X_CS_CallType	UE not previously pre-registered hence performs registration (Power up attach) and CSFB call Registration can be implicit registration SS is expected to send InitialAccessProbeRcvd and CS_Reg_CallCmplInd as an indication for successful completion of procedure
MobilityFromEUTRA_1XRTT	NullType	Prepare SS for Mobility from Eutra CDMA SS sends mobilityParameters to be tunnelled in HandoverFromEUTRAPreparationRequest Receive tunnelled 1xRTT GCSNA Encapsulated Origination message and MEID in ULHandoverPreparationTransfer Respond with GCSNA encapsulated 1xRTT Handoff Direction message to be sent tunnelled in MobilityFromEUTRACommand Receive HandoffCmpl in the 1xRTT Cell; SS is expected to send HandoffCmpl as an indication for successful completion of procedure
CS_OrderedRegistration	CS_Registration_Type	ordered registration on (already registered) 1xRTT cell or Pre registration Power up attach) through a different RAT. SS triggers the procedure by sending Registration Request order (GCSNA encapsulated in case of pre-registration) and sends mobilityParameters to be tunnelled in CSFBParametersRequestCDMA2000 SS is expected to send InitialAccessProbeRcvd (only if initial state is not pre-registration) and CS_RegistrationCmpl as an indication for successful completion of procedure
E_CSFB_Call	RTT1X_CS_CallType	Prepare SS for Enhanced CSFB call If the call Type is mt, CDMA SS sends 1x RTT GCSNA encapsulated General Page to be tunneled in DLInformation Transfer CDMA SS sends mobilityParameters to be tunneled in HandoverFromEUTRAPreparationRequest Receive tunneled 1xRTT GCSNA Encapsulated Origination (M0)/Page Response (MT) message and MEID in ULHandoverPreparationTransfer Respond with GCSNA encapsulated 1xRTT Handoff Direction message to be sent tunneled in MobilityFromEUTRACommand Receive HandoffCmpl in the 1xRTT Cell; SS responds with Alert With Information (MT)/Sevice connect (MO) in the 1xRTT cell. SS receives Connect order (MT)/Service Connect Completion (MO)

		SS is expected to send ECSFB_CallCmplInd as an indication for succesful completion of procedure
E_CSFB_Call_ECAM	RTT1X_CS_CallType	Prepare SS for Enhanced CSFB call with Extended channel assignment If the call Type is mt, CDMA SS sends 1x RTT GCSNA encapsulated General Page to be tunneled in DLInformation Transfer CDMA SS sends mobilityParameters to be tunneled in HandoverFromEUTRAPreparationRequest Receive tunneled 1xRTT GCSNA Encapsulated Origination (M0)/Page Response (MT) message and MEID in ULHandoverPreparationTransfer Respond with GCSNA Encapsulated ECAM message to be sent tunneled in MobilityFromEUTRACommand Receive Origination in the 1xRTT Cell; After extended channel assignment, SS receives Connect order (MT)/Service Connect Completion (MO) SS is expected to send ECSFB_ECAM_CallCmplInd as an indication for succesful completion of procedure
E_CSFB_Call_Reject	RTT1X_CS_CallType	Prepare SS for Enhanced CSFB call, which needs to be rejected If the call Type is mt, CDMA SS sends 1x RTT GCSNA encapsulated General Page to be tunneled in DLInformation Transfer CDMA SS sends mobilityParameters to be tunneled in HandoverFromEUTRAPreparationRequest Receive tunneled 1xRTT GCSNA Encapsulated Origination (M0)/Page Response (MT) message and MEID in ULHandoverPreparationTransfer Respond with GCSNA encapsulated 1xRTT Release Order message to be sent tunneled in DLInformation Transfer SS is expected to send ECSFB_CallRejInd as an indication for succesful completion of procedure

D.7.7 System_Interface

CDMA2000_SystemRequest_Type

TTCN-3 Union Type		
Name	**CDMA2000_SystemRequest_Type**	
Comment		
Cell	CDMA2000_CellConfigRequest_Type	configure/release a cell
CellAttenuationList	CDMA2000_CellAttenuationList_Type	

CDMA2000_SystemConfirm_Type

TTCN-3 Union Type		
Name	**CDMA2000_SystemConfirm_Type**	
Comment	confirmations for system configuration; in general to be sent after the configuration has been done	
Cell	Null_Type	(no further parameters from SS)
CellAttenuationList	Null_Type	(no further parameters from SS) NOTE 1: the confirmation shall be sent when all cells have changed power levels NOTE 2: for the CellId in the common ASP part the same rules are applied as for the CDMA2000 SYSTEM REQ

CDMA2000_SYSTEM_CTRL_REQ

TTCN-3 Record Type			
Name	**CDMA2000_SYSTEM_CTRL_REQ**		
Comment			
Common	CDMA2000_ReqAspCommonPart_Type		TimingInfo depends on respective primitive:
Request	CDMA2000_SystemRequest_Type		- Cell TimingInfo: 'now' (in general) - CellAttenuationList TimingInfo: 'now' (in general, but activation time may be used also)

CDMA2000_SYSTEM_CTRL_CNF

TTCN-3 Record Type			
Name	**CDMA2000_SYSTEM_CTRL_CNF**		
Comment			
Common	CDMA2000_CnfAspCommonPart_Type		TimingInfo is ignored by TTCN => SS may set TimingInfo to "None"
Confirm	CDMA2000_SystemConfirm_Type		

CDMA2000_SystemCommand_Type

TTCN-3 Union Type		
Name	**CDMA2000_SystemCommand_Type**	
Comment		
HRPD	HRPD_SystemCommand_Type	HRPD Specific System commands
RTT1X	RTT1X_SystemCommand_Type	1XRTT specific System commands

CDMA2000_SYSTEM_CMD

TTCN-3 Record Type			
Name	**CDMA2000_SYSTEM_CMD**		
Comment			
Common	CDMA2000_ReqAspCommonPart_Type		Routing info will be none generally; TimingInfo is generally now but activation time may be used also for all System commands Cnf and Follow on flags are both false
Command	CDMA2000_SystemCommand_Type		HRPD or 1XRTT System commands

CDMA2000_SystemIndication_Type

TTCN-3 Union Type		
Name	**CDMA2000_SystemIndication_Type**	
Comment		
HRPD	HRPD_SystemIndication_Type	
RTT1X	RTT1X_SystemIndication_Type	

CDMA2000_SYSTEM_IND

TTCN-3 Record Type			
Name	**CDMA2000_SYSTEM_IND**		
Comment			
Common	CDMA2000_IndAspCommonPart_Type		The SS shall provide TimingInfo depending on the respective indication:
Indication	CDMA2000_SystemIndication_Type		- Error TimingInfo: related to the error (if available) - HRPD/RTT1X Procedure completion The timing info corresponding to logical completion of the complete procedure includes completion of all sub protocols

CDMA2000_RLP_FLOW_COMMON_IND

TTCN-3 Record Type			
Name	**CDMA2000_RLP_FLOW_COMMON_IND**		
Comment	ASP to receive PDUs from RLP Packet Flows		
Common	CDMA2000_IndAspCommonPart_Type		CellId : identifier of the cell RoutingInfo : RLP Flow id TimingInfo : time when RLP SDU's has been completely received
Data	CDMA2000_U_PlaneData_Type		

CDMA2000_RLP_FLOW_COMMON_REQ

TTCN-3 Record Type			
Name	**CDMA2000_RLP_FLOW_COMMON_REQ**		
Comment	ASP to send PDUs to RLP Packet flows		
Common	CDMA2000_ReqAspCommonPart_Type		CellId : identifier of the cell RoutingInfo : RLP Flow id TimingInfo : starting point when to start sending sequence of data PDUs e.g. TimeStampLong_Type = X, subframe number = x; U_Plane.SubframeDataList(i).SubframeOffset := offset_i; => U_Plane.SubframeDataList(i).PduSduList shall be sent out at TimeStampLong_Type = X + ((x + offset_i) / 4); subframe number = (x + offset_i) mod 4 ControlInfo : CnfFlag:=false; FollowOnFlag:=false
U_Plane	CDMA2000_U_Plane_Request_Type		

CDMA2000_SYSTEM_PORT

TTCN-3 Port Type		
Name	**CDMA2000_SYSTEM_PORT**	
Comment	CDMA2000 PTC: Port for system configuration	
out	CDMA2000_SYSTEM_CTRL_REQ	
in	CDMA2000_SYSTEM_CTRL_CNF	

CDMA2000_SYSCMD_IND_PORT

TTCN-3 Port Type		
Name	**CDMA2000_SYSCMD_IND_PORT**	
Comment	CDMA2000 PTC: Port for system indications/Commands	
out	CDMA2000_SYSTEM_CMD	
in	CDMA2000_SYSTEM_IND	

CDMA2000_RLP_FLOW_PORT

TTCN-3 Port Type		
Name	**CDMA2000_RLP_FLOW_PORT**	
Comment	CDMA2000 PTC: Port for RLP SDU's to be sent on RLP packet data streams	
out	CDMA2000_RLP_FLOW_COMMON_REQ	
in	CDMA2000_RLP_FLOW_COMMON_IND	

D.8 CDMA2000_CommonDefs

type definitions used by CDMA2000 and EUTRA

CDMA2000_CommonDefs: Basic Type Definitions

TTCN-3 Basic Types		
BandclassCDMA2000_Type	integer (0..31)	Band class defined as in 36.331 ASN.1 definition for BandclassCDMA2000
ARFCN_ValueCDMA2000_Type	integer (0..2047)	ARFCN for CDMA2000 cell as in 36.331 ASN.1 definition for ARFCN_ValueCDMA2000
PhysCellIdCDMA2000_Type	integer (0..511)	PN offset for CDMA2000 cell as in 36.331 ASN.1 definition for PhysCellIdCDMA2000
ProtRev_Type	integer (0..255)	protocol revision
OpenLoopAdjust_Type	integer (0..255)	9.4.6.2.6 of C.S0024-C v2.0
BCD_Digit_Type	integer (0..9)	To represent BCD digit of MCC
TMSI_Code_Type	O4_Type	
EncryptionMode_Type	integer (0..7)	C.S0005-F v1.0 table 3.7.4.5-1 & 3.7.5.7-3 0 ... Encryption disabled 1 ... Encryption with ORYX algorithm for User Info and Enhanced Cellular Msg Encryption Algorithm for Signalling 2 ... Encryption with Rijndael algorithm 3-7 ... reserved
TMSI_ZoneLen_Type	integer (1..8)	TMSI Zone Length; On encoding this is encoded to B4_Type
SectorID_HRPD_Type	B128_Type	Sector ID for HRPD as in 36.331 ASN.1 definition for CellGlobalIdCDMA2000.cellGlobalIdHRPD
PilotOffset_Type	integer (-31..0)	Represents the offset i.e. Pilot Channel power to total cell power(dB); By default shall be set to -7 127 selected Max value by 7 bits
PowerIor_Type	integer (-127..0)	Represents the cell total Tx power Ior (dBm/1.23 MHz)
PowerIoc_Type	integer (-127..0)	Represents the cell total AWGN power Ioc (dBm/1.23 MHz) which is independent of cell
SystemType_Type	integer (0..255)	0 to 2 are allowed and 3 to 255 are reserved 13.1 of C.S0024-C v2.0
ColorCode_Type	integer (0..255)	7.11.6.2.1 of C.S0024-C v2.0
ReverseLinkMACIndex_Type	integer (0..383)	C.S0024-C v2.0 clause 12.4.1.3.2.2

MCC_Type

TTCN-3 Record of Type	
Name	**MCC_Type**
Comment	Represents Mobile Country Code
record length (3) of BCD_Digit_Type	

TMSI_Zone_Type

TTCN-3 Record of Type	
Name	**TMSI_Zone_Type**
Comment	TMSI Zone 1 to 8 octets
record length (1..8) of B8_Type	

TMSI_Type

TTCN-3 Record Type			
Name	**TMSI_Type**		
Comment	Globally unique TMSI as defined in C.S0005-F v1.0 clause 3.7.2.3.2.19		
TMSI_ZoneLen	TMSI_ZoneLen_Type		Length of TMSI_Zone 1..8
TMSI_Zone	TMSI_Zone_Type		TMSI_ZoneLen octets of TMSI_Zone
TMSI_Code	TMSI_Code_Type		TMSI code

SectorID_RTT1X_Type

TTCN-3 Record Type			
Name	**SectorID_RTT1X_Type**		
Comment	Sector ID for 1XRTT acc. to C.S0005-F v1.0 clause 3.7.2.3.2.1 and as in 36.331 ASN.1 clause 6.3.4, definition of CellGlobalIdCDMA2000.cellGlobalId1XRTT		
BaseId	B16_Type		Base station identification. The base station shall set this field to its identification number
NID	B16_Type		Network identification This field serves as a sub-identifier of a system as defined by the owner of the SID. The base station shall set this field to the network identification number for this network
SID	B15_Type		System identification. set to the system identification number for this system

CarrierFreqCDMA2000_Type

TTCN-3 Record Type			
Name	**CarrierFreqCDMA2000_Type**		
Comment	Carrier Frequency for CDMA2000 cell as in 36.331 ASN.1 definition for CarrierFreqCDMA2000; contains Band class 5 bit and Channel number 11 bit part of Sector Channel over head message contained in 24 bit Channel IE		
BandClass	BandclassCDMA2000_Type		
ARFCN	ARFCN_ValueCDMA2000_Type		

CDMA2K_Type

TTCN-3 Enumerated Type	
Name	**CDMA2K_Type**
Comment	CDMA 2000 Type for CDMA2000 cell as in 36.331 ASN.1 definition for CDMA2000-Type
type1XRTT	
typeHRPD	

CellGlobalIdCDMA2000_Type

TTCN-3 Union Type		
Name	**CellGlobalIdCDMA2000_Type**	
Comment	CDMA 2000 Type Sector ID of the Cell as in 36.331 ASN.1 definition CellGlobalIdCDMA2000	
RTT1X	SectorID_RTT1X_Type	
HRPD	SectorID_HRPD_Type	

ReverseRateLimit_Type

TTCN-3 Enumerated Type	
Name	**ReverseRateLimit_Type**
Comment	Table 9.9.6.3-2 of C.S0024-C v2.0; set to the highest data rate that the access terminal is allowed to use on the Reverse Traffic Channel; 10 Reserved values
kbps0	
kbps9_6	
kbps19_2	
kbps38_4	
kbps76_8	
kbps153_6	
resrv1	
resrv2	
resrv3	
resrv4	
resrv5	
resrv6	
resrv7	
resrv8	
resrv9	
resrv10	

PacketApplication_Type

TTCN-3 Enumerated Type	
Name	**PacketApplication_Type**
Comment	Type of Packet Application to be used in Stream protocol
enhMultiFlowPacketApp	

ControlChannelRate_Type

TTCN-3 Enumerated Type	
Name	**ControlChannelRate_Type**
Comment	Determines the MAC configuration for Control Channel
macIndex2	
macIndex3	

CDMA2000_CellId_Type

TTCN-3 Enumerated Type	
Name	**CDMA2000_CellId_Type**
Comment	
cdma2000_Cell_NonSpecific	
cdma2000_Cell15	HRDP Cell
cdma2000_Cell16	HRDP Cell
cdma2000_Cell17	HRDP Cell
cdma2000_Cell18	HRDP Cell
cdma2000_Cell19	RTT1X Cell
cdma2000_Cell20	RTT1X Cell
cdma2000_Cell21	RTT1X Cell
cdma2000_Cell22	RTT1X Cell

SearchWindowSizeRecord_Type

TTCN-3 Record Type			
Name	**SearchWindowSizeRecord_Type**		
Comment			
SearchWindow_Active	SearchWindowSize_Type		Search Window for Active Cells
SearchWindow_Neighbor	SearchWindowSize_Type		Search Window for Neighbour Cells
SearchWindow_Remaining	SearchWindowSize_Type		Search Window for Rest Cells

D.9 HRPD_MsgTypeDefs

HRPD_MsgTypeDefs: Basic Type Definitions

TTCN-3 Basic Types		
MessageId_Type	B8_Type	
TransactionId_Type	B8_Type	
B34_Type	bitstring length(34)	
RAChannelGain	B2_Type	
MACIndexMSB	B1_Type	
DSC	B3_Type	
DeltaT2P	B6_Type	

CONNECTION_REQUEST

TTCN-3 Record Type			
Name	**CONNECTION_REQUEST**		
Comment	clause 7.4.6.2.2		
MessageId	MessageId_Type		The access terminal shall set this field to 0x01
TransactionId	TransactionId_Type		The access terminal shall increment this value for each new ConnectionRequest message sent
RequestReason	B4_Type		0x0 Access Terminal Initiated 0x1 Access Network Initiated
Reserved	B4_Type		The access terminal shall set this field to zero. The access network shall ignore this field.

Pilot

TTCN-3 Record Type			
Name	**Pilot**		
Comment			
PilotPN	B9_Type		The access network shall set this field to the PN Offset associated with the sector that will transmit a Power Control Channel to the access terminal, to whom the access terminal is allowed to point its DRC, and whose Control Channel and Forward Traffic Channel the access terminal may monitor.
SoftHandoff	B1_Type		If the Forward Traffic Channel associated with this pilot will carry the same closed-loop power-control bits as that of the previous pilot in this message, the access network shall set this field to '1'; otherwise, the access network shall set this field to '0'. The access network shall set the first instance of this field to '0'. If the SofterHandoff field associated with a PilotPN is equal to '1', then the PilotPN is defined to belong to the same cell as the previous PilotPN in this message
MACIndexLSBs	B6_Type		Least Significant Bits of the Medium Access Control Index. The access network shall set this field to the six least significant bits of the MACIndex assigned to the access terminal by this sector
DRCCover	B3_Type		The access network shall set this field to the index of the DRC cover associated with the sector specified in this record.
RABLength	B2_Type		If the traffic channel being assigned by this message is to use Subtype 0 or Subtype 1 Reverse Traffic Channel MAC protocol, the access network shall set the RABLength to specify the Reverse Activity Bit length according to Table 9.7.6.2-2. Otherwise, the access network shall set this field to '00'. '00':8,'01':16,'10:32,'11':64
RABOffset	B3_Type		If the traffic channel being assigned 1 by this message is to use Subtype 0 or Subtype 1 Reverse Traffic Channel MAC protocol, the access network shall set this field to indicate the offset associated with the Reverse Activity Bit. Otherwise, the access network shall set this field to '000'. The value (in slots) of RABOffset is the number the field is set to multiplied by RABLength/8

PilotList

TTCN-3 Record of Type	
Name	**PilotList**
Comment	
record length (1..15) of Pilot	

RAChannelGainList

TTCN-3 Record of Type	
Name	**RAChannelGainList**
Comment	
record length (1..15) of RAChannelGain	

MACIndexMSBList

TTCN-3 Record of Type	
Name	**MACIndexMSBList**
Comment	
record length (1..15) of MACIndexMSB	

DSCList

TTCN-3 Record of Type	
Name	**DSCList**
Comment	
record length (1..15) of DSC	

DeltaT2PList

TTCN-3 Record of Type	
Name	**DeltaT2PList**
Comment	
record length (1..15) of DeltaT2P	

PilotRec

TTCN-3 Record Type			
Name	**PilotRec**		
Comment			
PilotPNPhase	B15_Type		The PN offset in resolution of 1 chip of a pilot in the Active Set or Candidate Set of the access terminal that is not the reference pilot
ChannelIncluded	B1_Type		The access terminal shall set this field to '1' if the channel for this pilot offset is not the same as the current channel. Otherwise, the access terminal shall set this field to '0'.
Channel	B24_Type	opt	The access terminal shall include this field if the ChannelIncluded field is set to '1'. The access terminal shall set this to the channel record corresponding to this pilot (see 14.1). Otherwise, the access terminal shall omit this field for this pilot offset
PilotStrength	B6_Type		The access terminal shall set this field to - 2 * 10 * log10PS , where PS is the strength of the pilot in the above field, measured as specified in 8.7.6.1.2.3. If this value is less than 0, the access terminal shall set this field to '000000'. If this value is greater than'111111', the access terminal shall set this field to '111111'
Keep	B1_Type		If the pilot drop timer corresponding to the pilot in the above field has expired, the access terminal shall set this field to '0'; otherwisethe access terminal shall set this field to '1'

PilotRecList

TTCN-3 Record of Type	
Name	**PilotRecList**
Comment	
record length (1..15) of PilotRec	

ReservedVariable

TTCN-3 Record of Type	
Name	**ReservedVariable**
Comment	
record length (0..7) of bitstring	

ROUTE_UPDATE

TTCN-3 Record Type			
Name	**ROUTE_UPDATE**		
Comment	clause 8.7.6.2.1		
MessageId	MessageId_Type		The access network shall set this field to '00'O
MessageSequence	B8_Type		The access terminal shall set this field to the sequence number of this message. The sequence number of this message is 1 more than the sequence number of the last RouteUpdate message (modulo 284)sent by this access terminal. If this is the first RouteUpdate message sent by the access terminal, it shall set this field to 0x00
ReferencePilotPN	B9_Type		The access terminal shall set this field to the access terminal's time reference (the reference pilot), relative to the zero offset pilot PN sequence in units of 64 PN chips
ReferencePilotStrength	B6_Type		The access terminal shall set this field to - 2 * 10 * log10PS , where PS is the strength of the reference pilot, measured as specified in 8.7.6.1.2.3. If this value is less than 0, the access terminal shall set this field to '000000'. If this value is greater than '111111', the access terminal shall set this field to '111111'
ReferenceKeep	B1_Type		If the pilot drop timer corresponding to the reference pilot has expired, the access terminal shall set this field to '0'; otherwise the access terminal shall set this field to '1'
NumPilots	B4_Type		The access terminal shall set this field to the number of pilots that follow this field in the message
PilotsRecList	PilotRecList		Pilot record
Reserved	ReservedVariable		The number of bits in this field is equal to the number needed to make the message length an integer number of octets. This field shall be set to all zeros

Header_Format

TTCN-3 Record Type			
Name	**Header_Format**		
Comment	When TunnelModeEnabled is not set to '0', the access terminal and the access network shall place the following header in front of each packet receivedfrom the Packet Consolidation Protocol		
SAPState	B1_Type		The sender shall set this field to '1' if the Inter-RAT Signalling Adaptation Protocol is currently in the Open State, otherwise the sender shall setthis field to '0'
SessionConfigurationToken	B16_Type		If SAP is in the Open State, the access terminal shall omit this field. Otherwise, the access terminal shall set this field to the value of theSessionConfigurationToken which is public data of the Session Configuration Protocol. The access network shall omit this field
ConnectionLayerFormat	B1_Type		The access terminal or the access network shall set this field to '1' if the connection layer packet is Format B; otherwise, it shall set this field to '0'
ATI_Record	B34_Type		Access Terminal Identifier Record. The access terminal or the access network shall set this field to the record specifying the access terminal'sID specified by TransmitATI.ATI and TransmitATI.ATIType. This record is defined in 14.2 in [1]
Reserved	B4_Type		The access terminal or the access network shall this field to all zeros

D.10 EUTRA_ASP_CDMA2000TunnellingDefs

ASP definitions for tunnelling of CDMA2000 messages e.g. during CDMA2000 pre-registration

EUTRA_ASP_CDMA2000TunnellingDefs: Basic Type Definitions

TTCN-3 Basic Types		
TunneledInfoCDMA2000	octetstring	
MEID_Type	ULHandoverPreparationTransfer_r8_IEs .meid	
CDMA2000_MSG_REQ	CDMA2000_UL_Container_Type	
CDMA2000_MSG_IND	CDMA2000_DL_Container_Type	

UL_TunneledInfoCDMA2000

TTCN-3 Record Type			
Name	**UL_TunneledInfoCDMA2000**		
Comment			
Msg	TunneledInfoCDMA2000		OCTET STRING
Meid	MEID_Type	opt	ASN.1 type: BIT STRING (SIZE (56)) used to tunnel meid received from UE in ULHandoverPreparationTransfer for 1xRTT, not present other wise

CDMA2000_UL_Container_Type

TTCN-3 Record Type			
Name	**CDMA2000_UL_Container_Type**		
Comment			
CDMA2000Type	CDMA2000_Type		ASN.1 type: type1XRTT, typeHRPD
UL_Msg	UL_TunneledInfoCDMA2000		

DL_TunneledInfoCDMA2000

TTCN-3 Record Type			
Name	**DL_TunneledInfoCDMA2000**		
Comment			
Msg	TunneledInfoCDMA2000		OCTET STRING

CDMA2000_DL_Container_Type

TTCN-3 Record Type			
Name	**CDMA2000_DL_Container_Type**		
Comment			
CDMA2000Type	CDMA2000_Type		ASN.1 type: type1XRTT, typeHRPD
DL_Msg	DL_TunneledInfoCDMA2000		OCTET STRING

CDMA2000_TUNNELLING_PORT

TTCN-3 Port Type		
Name	**CDMA2000_TUNNELLING_PORT**	
Comment	EUTRA PTC: Port to deal with tunnelling of CDMA2000 messages	
out	CDMA2000_MSG_REQ	
in	CDMA2000_MSG_IND	

D.11 EUTRA_ASP_VirtualNoiseDefs

ASP definitions for virtual noise generation in EUTRA cells.
The noise is configurated for an already existing EUTRA cell.
For UEs with 2 antenna connectors the AWGN (Additive white Gaussian noise) signals applied to each receiver antenna connector shall be uncorrelated.

EUTRA_ASP_VirtualNoiseDefs: Basic Type Definitions

TTCN-3 Basic Types		
EUTRA_VngConfigConfirm_Type	Null_Type	

EUTRA_VngConfigInfo_Type

TTCN-3 Record Type			
Name	**EUTRA_VngConfigInfo_Type**		
Comment			
Bandwidth	Dl_Bandwidth_Type		Bandwidth to be used for the noise (in general the same bandwidth as for the associated EUTRA cell)
NocLevel	integer		Noc level; calculation is FFS

EUTRA_VngConfigRequest_Type

TTCN-3 Union Type		
Name	**EUTRA_VngConfigRequest_Type**	
Comment	configure/activate noise for a given cell; NOTE: it is assumed the associated EUTRA cell has been created beforehand	
Configure	EUTRA_VngConfigInfo_Type	configuration of the virtual noise generator; regardless of the power level the noise generator is off before it gets activated for this cell; whether the configuration can be changed during a test is FFS but if so the noise generator shall be deactivated for this cell
Activate	Null_Type	noise is activated (switched on) for the given cell acc. to the previous configuration; while being active the configuration shall not be modified
Deactivate	Null_Type	deactivate noise for given cell

EUTRA_VNG_CTRL_REQ

TTCN-3 Record Type			
Name	**EUTRA_VNG_CTRL_REQ**		
Comment			
Common	ReqAspCommonPart_Type		CellId : as for the associated EUTRA cell RoutingInfo : None TimingInfo : Now ControlInfo : CnfFlag:=true; FollowOnFlag:=false
Request	EUTRA_VngConfigRequest_Type		

EUTRA_VNG_CTRL_CNF

TTCN-3 Record Type			
Name	**EUTRA_VNG_CTRL_CNF**		
Comment			
Common	CnfAspCommonPart_Type		TimingInfo is ignored by TTCN (apart from EnquireTiming) => SS may set TimingInfo to "None"
Confirm	EUTRA_VngConfigConfirm_Type		

EUTRA_VNG_PORT

TTCN-3 Port Type		
Name	**EUTRA_VNG_PORT**	
Comment	EUTRA PTC: Port for virtual noise generator	
out	EUTRA_VNG_CTRL_REQ	
in	EUTRA_VNG_CTRL_CNF	

D.12 UTRAN_ASP_VirtualNoiseDefs

ASP definitions for virtual noise generation in UTRAN cells.
The noise is configurated for an already existing UTRAN cell.
NOTE: For the time being VNG is applicable for UTRAN FDD only as acc. to TS 36.304 clause 5.2.4.5 there is no quality based measurement for UTRAN TDD, GERAN or CDMA2000

UTRAN_ASP_VirtualNoiseDefs: Basic Type Definitions

TTCN-3 Basic Types		
UTRAN_VngConfigConfirm_Type	Null_Type	

UTRAN_VngConfigInfo_Type

TTCN-3 Record Type			
Name	**UTRAN_VngConfigInfo_Type**		
Comment			
IocLevel	integer		Ioc level; calculation is FFS

UTRAN_VngConfigRequest_Type

TTCN-3 Union Type		
Name	**UTRAN_VngConfigRequest_Type**	
Comment	configure/activate noise for a given cell; NOTE: it is assumed the associated UTRAN cell has been created beforehand	
Configure	UTRAN_VngConfigInfo_Type	configuration of the virtual noise generator; regardless of the power level the noise generator is off before it gets activated for this cell; whether the configuration can be changed during a test is FFS but if so the noise generator shall be deactivated for this cell
Activate	Null_Type	noise is activated (switched on) for the given cell acc. to the previous configuration; while being active the configuration shall not be modified
Deactivate	Null_Type	deactivate noise for given cell

UTRAN_VNG_CTRL_REQ

TTCN-3 Record Type			
Name	**UTRAN_VNG_CTRL_REQ**		
Comment			
CellId	integer		id of associated UTRAN cell
Request	UTRAN_VngConfigRequest_Type		

UTRAN_VNG_CTRL_CNF

TTCN-3 Record Type			
Name	**UTRAN_VNG_CTRL_CNF**		
Comment			
CellId	integer		id of associated UTRAN cell
Confirm	UTRAN_VngConfigConfirm_Type		

UTRAN_VNG_PORT

TTCN-3 Port Type		
Name	**UTRAN_VNG_PORT**	
Comment	UTRAN PTC: Port for virtual noise generator	
out	UTRAN_VNG_CTRL_REQ	
in	UTRAN_VNG_CTRL_CNF	

D.13 CommonDefs

CommonDefs: Constant Definitions

TTCN-3 Basic Types			
tsc_UInt8Max	integer	255	
tsc_UInt16Max	integer	65535	
tsc_UInt20Max	integer	1048575	
tsc_UInt32Max	integer	4294967295	
tsc_GuardTimePreamble	float	180	

CommonDefs: Basic Type Definitions

TTCN-3 Basic Types		
B1_Type	bitstring length(1)	
B2_Type	bitstring length(2)	
B3_Type	bitstring length(3)	
B4_Type	bitstring length(4)	
B5_Type	bitstring length(5)	
B6_Type	bitstring length(6)	
B7_Type	bitstring length(7)	
B7_15_Type	bitstring length(7..15)	NOTE: length restriction can only be a range but not two distinct lengths
B8_Type	bitstring length(8)	
B9_Type	bitstring length(9)	
B10_Type	bitstring length(10)	
B11_Type	bitstring length(11)	
B12_Type	bitstring length(12)	
B15_Type	bitstring length(15)	
B16_Type	bitstring length(16)	
B24_Type	bitstring length(24)	
B32_Type	bitstring length(32)	
B128_Type	bitstring length(128)	
B256_Type	bitstring length(256)	
B128_Key_Type	B128_Type	128 bit security key
O3_Type	octetstring length(3)	
O4_Type	octetstring length(4)	
O8_Type	octetstring length(8)	
O13_Type	octetstring length(14)	
Null_Type	boolean (true)	dummy type for 'typeless' fields in unions
Dummy_Type	boolean (true)	dummy type for temporary purposes only
UInt16_Type	integer (0 .. tsc_UInt16Max)	
UInt32_Type	integer (0 .. tsc_UInt32Max)	
Char1_Type	charstring length (1)	
IP_DrbId_Type	integer	DRB identity type common for all RATs: - for EUTRA it corrensponds to the ASN.1 type DRB-Identity - for UTRAN it corrensponds to the ASN.1 type RB-Identity and values are as defined in TS 34.123-3 Table 8.2.4.1 - for GERAN the NSAPI value (type record NSAPI) may be used (FFS) NOTE: this is introduced to simplify the dependencies (i.e. to keep IP_ASP_TypeDefs independent from any RAT specific type definitions)

EUTRA_CellId_Type

TTCN-3 Enumerated Type	
Name	**EUTRA_CellId_Type**
Comment	
eutra_Cell_NonSpecific	
eutra_Cell1	
eutra_Cell2	
eutra_Cell3	
eutra_Cell4	
eutra_Cell6	
eutra_Cell10	
eutra_Cell11	
eutra_Cell12	
eutra_Cell13	
eutra_Cell14	
eutra_Cell23	
eutra_Cell28	
eutra_Cell29	
eutra_Cell30	
eutra_Cell31	
eutra_CellA	
eutra_CellB	
eutra_CellC	
eutra_CellD	
eutra_CellE	
eutra_CellG	
eutra_CellH	
eutra_CellI	
eutra_CellJ	
eutra_CellK	
eutra_CellL	
eutra_CellM	

EUTRA_CellIdList_Type

TTCN-3 Record of Type	
Name	**EUTRA_CellIdList_Type**
Comment	
record length (0..7) of EUTRA_CellId_Type	

UTRAN_CellId_Type

TTCN-3 Enumerated Type	
Name	**UTRAN_CellId_Type**
Comment	
utran_CellDedicated	
utran_Cell5	
utran_Cell7	
utran_Cell8	
utran_Cell9	
utran34_Cell1	
utran34_Cell2	
utran34_Cell3	
utran34_Cell4	
utran34_Cell5	
utran34_Cell6	
utran34_Cell7	
utran34_Cell8	
utran34_CellA	
utran34_CellB	
utran34_CellC	
utran34_CellD	
utran34_CellE	
utran34_CellF	
utran34_CellG	
utran34_CellH	

IP_EUTRA_DrbInfo_Type

TTCN-3 Record Type			
Name	**IP_EUTRA_DrbInfo_Type**		
Comment			
CellId	EUTRA_CellId_Type		data is routed to a specific cell regardless of whether the same DRB is configured in any other cell
DrbId	IP_DrbId_Type	opt	mandatory at the system interface

IP_UTRAN_GERAN_DrbInfo_Type

TTCN-3 Record Type			
Name	**IP_UTRAN_GERAN_DrbInfo_Type**		
Comment			
CellId	integer		
DrbId	IP_DrbId_Type	opt	mandatory at the system interface

IP_DrbInfo_Type

TTCN-3 Union Type		
Name	**IP_DrbInfo_Type**	
Comment		
Eutra	IP_EUTRA_DrbInfo_Type	
Utran	IP_UTRAN_GERAN_DrbInfo_Type	
Geran	IP_UTRAN_GERAN_DrbInfo_Type	

IPCAN_RAN_Type

TTCN-3 Enumerated Type	
Name	**IPCAN_RAN_Type**
Comment	radio access network technology used by the IPCAN PTC
GERAN	
UTRAN_FDD	
UTRAN_TDD	
EUTRA_FDD	
EUTRA_TDD	

D.14 References to TTCN-3

References to TTCN-3		
EUTRA_ASP_TypeDefs	EUTRA_Defs/EUTRA_ASP_TypeDefs.ttcn	Rev 10091
EUTRA_ASP_DrbDefs	EUTRA_Defs/EUTRA_ASP_DrbDefs.ttcn	Rev 9461
EUTRA_ASP_SrbDefs	EUTRA_Defs/EUTRA_ASP_SrbDefs.ttcn	Rev 8395
IP_ASP_TypeDefs	IP_PTC/IP_ASP_TypeDefs.ttcn	Rev 9723
NasEmu_AspTypes	NasEmulation/NasEmu_AspTypes.ttcn	Rev 8395
EUTRA_CommonDefs	EUTRA_Defs/EUTRA_CommonDefs.ttcn	Rev 9723
CDMA2000_ASP_TypeDefs	C2K/CDMA2000_ASP_TypeDefs.ttcn	Rev 8395
CDMA2000_CommonDefs	C2K/CDMA2000_CommonDefs.ttcn	Rev 9022
HRPD_MsgTypeDefs	C2K/HRPD_MsgTypeDefs.ttcn	Rev 8886
EUTRA_ASP_CDMA2000TunnellingDefs	EUTRA_Defs/EUTRA_ASP_CDMA2000TunnellingDefs.ttcn	Rev 8820
EUTRA_ASP_VirtualNoiseDefs	EUTRA_Defs/EUTRA_ASP_VirtualNoiseDefs.ttcn	Rev 8395
UTRAN_ASP_VirtualNoiseDefs	UTRAN/UTRAN_ASP_VirtualNoiseDefs.ttcn	Rev 8465
CommonDefs	Common/CommonDefs.ttcn	Rev 9713

Annex E (informative):
Change history

Date	TSG #	TSG Doc.	CR	Rev	Subject/Comment	Old	New
2008-05					Creation of draft TS		0.0.2
2008-08					Add test models	0.0.2	0.1.0
2008-10					Add ASPs and state model	0.1.1	0.3.0
2008-12					Add details of UL/DL scheduling and cell configurations	0.4.0	0.5.0
2009-02					Change naming conventions, add more design considerations	0.5.0	1.0.0
2009-03	RAN#43	RP-090271			Presentation for Information	1.0.0	1.0.2
2009-03					Add Upper tester interface	1.0.2	1.1.0
2009-04					Improved DL scheduling	1.1.0	1.2.0
2009-06					Add normative annex D for ASP definitions	1.2.0	1.3.0
2009-08					General update	1.3.0	1.4.0
2009-09					Style /format check from ETSI EditHelp	1.4.0	1.4.1
2009-09	RAN#45	RP-090753			Presentation of v2.0.0 for approval	1.4.1	2.0.0
2009-09					Updated to 8.0.0 with no change	2.0.0	8.0.0
2009-12	RAN#46	RP-091122	0001	-	LTE ASP clarifications and update	8.0.0	8.1.0
2009-12	RAN#46	RP-091119	0002	-	CR to 36.523-3: Add new e-mail agreed LTE TTCN test cases in the TC list of Annex A and update Annex D	8.0.0	8.1.0
2009-12	RAN#46	R5s090180	0003	-	Resubmission of GCF WI 81 LTE RRC test case 8.1.2.1 on wk42 TTCN	8.0.0	8.1.0
2009-12	RAN#46	R5s090139	0004	-	Addition of GCF WI 81 LTE RRC test case 8.1.1.1	8.0.0	8.1.0
2009-12	RAN#46	R5s090144	0005	-	Addition of GCF WI 81 LTE RRC test case 8.1.3.1	8.0.0	8.1.0
2009-12	RAN#46	R5s090163	0006	-	Addition of GCF WI 82 EUTRA NAS test case 9.2.1.1.2	8.0.0	8.1.0
2009-12	RAN#46	R5s090141	0007	-	Addition of GCF WI 81 LTE MAC test case 7.1.1.1	8.0.0	8.1.0
2009-12	RAN#46	R5s090160	0008	-	Addition of GCF WI 81 EUTRA RLC test case 7.2.3.1	8.0.0	8.1.0
2009-12	RAN#46	R5s090156	0009	-	Addition of GCF WI 81 EUTRA RLC test case 7.2.3.2	8.0.0	8.1.0
2009-12	RAN#46	R5s090154	0010	-	Addition of GCF WI 82 EPC test case 9.2.2.2.1	8.0.0	8.1.0
2009-12	RAN#46	R5s090165	0011	-	Addition of GCF WI 81 EUTRA RLC test case 7.2.3.3	8.0.0	8.1.0
2009-12	RAN#46	R5s090171	0012	-	Addition of GCF WI 81 EUTRA MAC test case 7.1.3.3	8.0.0	8.1.0
2009-12	RAN#46	R5s090176	0013	-	Addition of GCF WI 82 EPC test case 9.3.2.1	8.0.0	8.1.0
2009-12	RAN#46	R5s090174	0014	-	Addition of GCF WI 81 EUTRA MAC test case 7.1.3.7	8.0.0	8.1.0
2009-12	RAN#46	R5s090178	0015	-	Addition of GCF WI 81 EUTRA MAC test case 7.1.3.6	8.0.0	8.1.0
2009-12	RAN#46	R5s090198	0016	-	Addition of GCF WI 81 EUTRA PDCP test case 7.3.3.1	8.0.0	8.1.0
2009-12	RAN#46	R5s090204	0017	-	Addition of GCF WI 81 EUTRA PDCP test case 7.3.3.4	8.0.0	8.1.0
2009-12	RAN#46	R5s090202	0018	-	Addition of GCF WI 81 EUTRA PDCP test case 7.3.3.3	8.0.0	8.1.0
2009-12	RAN#46	R5s090200	0019	-	Addition of GCF WI 81 EUTRA PDCP test case 7.3.3.2	8.0.0	8.1.0
2009-12	RAN#46	R5s090196	0020	-	Addition of GCF WI 81 EUTRA PDCP test case 7.3.4.2	8.0.0	8.1.0
2009-12	RAN#46	R5s090194	0021	-	Addition of GCF WI 81 EUTRA PDCP test case 7.3.4.1	8.0.0	8.1.0
2010-03	RAN#47	R5-100103	0090	-	An additional option for IP address allocation in test cases using UE test mode	8.1.0	8.2.0
2010-03	RAN#47	R5-101049	0081	-	Add a new clause for postamble in a UTRA/GERAN cell	8.1.0	8.2.0
2010-03	RAN#47	R5-101050	0082	2	Routine maintenance of TS 36.523-3	8.1.0	8.2.0
2010-03	RAN#47	RP-100147	0022	1	CR to 36.523-3: Add new verified and e-mail agreed TTCN test cases in the TC lists in 36.523-3 (prose), Annex A	8.1.0	8.2.0
2010-03	RAN#47	R5s090209	0076	-	Addition of GCF WI 81 LTE Idle Mode test case 6.1.2.2 on wk42 TTCN	8.1.0	8.2.0
2010-03	RAN#47	R5s090210	0075	-	Addition of GCF WI 82 EPC test case 9.1.3.1	8.1.0	8.2.0
2010-03	RAN#47	R5s090212	0078	-	Addition of GCF WI 82 EPC test case 9.2.3.1.5	8.1.0	8.2.0
2010-03	RAN#47	R5s090214	0077	-	Addition of GCF WI 81 EUTRA MAC test case 7.1.4.15	8.1.0	8.2.0
2010-03	RAN#47	R5s090217	0072	-	Addition of GCF WI 81 EUTRA RLC test case 7.2.3.5	8.1.0	8.2.0
2010-03	RAN#47	R5s090219	0073	-	Addition of GCF WI 81 EUTRA RLC test case 7.2.3.17	8.1.0	8.2.0
2010-03	RAN#47	R5s090222	0074	-	Addition of GCF WI 81 EUTRA RLC test case 7.2.3.20	8.1.0	8.2.0
2010-03	RAN#47	R5s090306	0045	-	Addition of GCF WI 81 LTE RRC test case 8.5.4.1	8.1.0	8.2.0
2010-03	RAN#47	R5s090310	0038	-	Addition of GCF WI-82 EPC test case 9.1.2.1	8.1.0	8.2.0

Date	TSG #	TSG Doc.	CR	Rev	Subject/Comment	Old	New
2010-03	RAN#47	R5s090314	0030	-	Addition of GCF WI 81 EUTRA RLC test case 7.2.2.1	8.1.0	8.2.0
2010-03	RAN#47	R5s090316	0049	-	Addition of GCF WI 81 EUTRA RLC test case 7.2.2.2	8.1.0	8.2.0
2010-03	RAN#47	R5s090318	0042	-	Addition of GCF WI 81 EUTRA RLC test case 7.2.2.3	8.1.0	8.2.0
2010-03	RAN#47	R5s090320	0041	-	Addition of GCF WI 81 EUTRA RLC test case 7.2.2.4	8.1.0	8.2.0
2010-03	RAN#47	R5s090322	0028	-	Correction to test step f_GetPDNAddress	8.1.0	8.2.0
2010-03	RAN#47	R5s090331	0024	-	Resubmission of GCF WI-81 LTE RRC test case 8.2.2.1 on ATS_wk47	8.1.0	8.2.0
2010-03	RAN#47	R5s090333	0025	-	Resubmission of GCF WI-81 LTE RRC test case 8.2.2.2 on ATS_wk47	8.1.0	8.2.0
2010-03	RAN#47	R5s090335	0023	-	Resubmission of GCF WI-81 LTE RRC test case 8.2.3.1 on ATS_wk47	8.1.0	8.2.0
2010-03	RAN#47	R5s090337	0027	-	Correction to EUTRA MAC test cases 7.1.3.3 and 7.1.3.7	8.1.0	8.2.0
2010-03	RAN#47	R5s090340	0040	-	Addition of GCF WI 81 EUTRA RLC test case 7.2.2.5.1	8.1.0	8.2.0
2010-03	RAN#47	R5s090342	0039	-	Addition of GCF WI 81 EUTRA RLC test case 7.2.2.5.2	8.1.0	8.2.0
2010-03	RAN#47	R5s090345	0043	-	Addition of GCF WI 81 EUTRA MAC test case 7.1.1.2	8.1.0	8.2.0
2010-03	RAN#47	R5s090347	0048	-	Addition of GCF WI 81 EUTRA MAC test case 7.1.2.2	8.1.0	8.2.0
2010-03	RAN#47	R5s090349	0033	-	Addition of GCF WI 81 EUTRA MAC test case 7.1.2.3	8.1.0	8.2.0
2010-03	RAN#47	R5s090351	0034	-	Addition of GCF WI 81 EUTRA MAC test case 7.1.2.4	8.1.0	8.2.0
2010-03	RAN#47	R5s090353	0035	-	Addition of GCF WI 81 EUTRA MAC test case 7.1.2.5	8.1.0	8.2.0
2010-03	RAN#47	R5s090355	0047	-	Addition of GCF WI 81 EUTRA MAC test case 7.1.2.7	8.1.0	8.2.0
2010-03	RAN#47	R5s090357	0032	-	Addition of GCF WI 81 EUTRA MAC test case 7.1.2.9	8.1.0	8.2.0
2010-03	RAN#47	R5s090359	0050	-	Addition of GCF WI 81 EUTRA MAC test case 7.1.4.4	8.1.0	8.2.0
2010-03	RAN#47	R5s090361	0026	-	Correction of GCF WI 81 EUTRA RLC test case 7.2.3.2	8.1.0	8.2.0
2010-03	RAN#47	R5s090362	0031	-	Addition of GCF WI 81 EUTRA MAC test case 7.1.4.13	8.1.0	8.2.0
2010-03	RAN#47	R5s090364	0054	-	Addition of GCF WI 81 EUTRA MAC test case 7.1.3.1	8.1.0	8.2.0
2010-03	RAN#47	R5s090366	0046	-	Addition of GCF WI 82 EPC test case 9.3.1.1	8.1.0	8.2.0
2010-03	RAN#47	R5s090368	0029	-	Addition of GCF WI 81 EUTRA MAC test case 7.1.4.5	8.1.0	8.2.0
2010-03	RAN#47	R5s090373	0037	-	TTCN corrections from LTE ATS_wk51 regression testing	8.1.0	8.2.0
2010-03	RAN#47	R5s090375	0056	-	Addition of GCF WI 81 EUTRA RLC test case 7.2.3.8	8.1.0	8.2.0
2010-03	RAN#47	R5s090377	0055	-	Addition of GCF WI 81 EUTRA MAC test case 7.1.4.6	8.1.0	8.2.0
2010-03	RAN#47	R5s090379	0036	-	Correction to EPC test case 9.2.3.1.5	8.1.0	8.2.0
2010-03	RAN#47	R5s100001	0044	-	Correction to EUTRA RLC test case 7.2.3.17	8.1.0	8.2.0
2010-03	RAN#47	R5s100002	0052	-	Addition of GCF WI 81 EUTRA RLC test case 7.2.3.14	8.1.0	8.2.0
2010-03	RAN#47	R5s100004	0059	-	Addition of GCF WI 81 EUTRA RLC test case 7.2.2.6	8.1.0	8.2.0
2010-03	RAN#47	R5s100006	0050	-	Addition of GCF WI 81 EUTRA RLC test case 7.2.2.7	8.1.0	8.2.0
2010-03	RAN#47	R5s100008	0056	-	Addition of GCF WI 82 LTE NAS test case 9.2.1.1.1	8.1.0	8.2.0
2010-03	RAN#47	R5s100012	0053	-	Addition of GCF WI 81 EUTRA PDCP test case 7.3.1.1	8.1.0	8.2.0
2010-03	RAN#47	R5s100014	0051	-	Addition of GCF WI 81 EUTRA RLC test case 7.2.2.9	8.1.0	8.2.0

Date	TSG #	TSG Doc.	CR	Rev	Subject/Comment	Old	New
2010-03	RAN#47	R5s100016	0058	-	Addition of GCF WI 81 EUTRA RLC test case 7.1.4.1	8.1.0	8.2.0
2010-03	RAN#47	R5s100018	0053	-	Addition of GCF WI 81 EUTRA RLC test case 7.2.3.4	8.1.0	8.2.0
2010-03	RAN#47	R5s100020	0052	-	Summary of regression errors in wk51 LTE ATS	8.1.0	8.2.0
2010-03	RAN#47	R5s100021	0051	-	Addition of GCF WI 81 EUTRA MAC test case 7.1.3.4	8.1.0	8.2.0
2010-03	RAN#47	R5s100024	0054	-	Addition of GCF WI-082 EPC test case 13.1.1	8.1.0	8.2.0
2010-03	RAN#47	R5s100029	0057	-	Addition of GCF WI 81 EUTRA Idle Mode test case 6.1.2.4	8.1.0	8.2.0
2010-03	RAN#47	R5s100031	0058	-	Addition of GCF WI 81 EUTRA RLC test case 7.2.3.10	8.1.0	8.2.0
2010-03	RAN#47	R5s100039	0055	-	Addition of GCF WI 81 EUTRA RLC test case 7.2.3.18	8.1.0	8.2.0
2010-03	RAN#47	R5s100041	0057	-	Addition of GCF WI 81 EUTRA MAC test case 7.1.4.7	8.1.0	8.2.0
2010-03	RAN#47	R5s100043	0070	-	Addition of GCF WI 81 LTE MAC test case 7.1.4.10	8.1.0	8.2.0
2010-03	RAN#47	R5s100047	0071	-	Corrections of GCF WI 81 EUTRA RLC test cases 7.2.3.1, 7.2.3.4, and 7.2.3.5.	8.1.0	8.2.0
2010-03	RAN#47	R5s100049	0059	-	Regression CR for LTE wk03 ATS	8.1.0	8.2.0
2010-03	RAN#47	R5s100053	0079	-	Correction of GCF WI 81 EUTRA RLC test case 7.2.3.8	8.1.0	8.2.0
2010-03	RAN#47	R5s100054	0080	-	Addition of GCF WI 81 EUTRA RLC test case 7.2.3.15	8.1.0	8.2.0
2010-06	RAN#48	RP-100515	0084	-	CR to 36.523-3: Add new verified and e-mail agreed TTCN test cases in the TC lists in 36.523-3 (prose), Annex A	8.2.0	8.3.0
2010-06	RAN#48	R5-103845	0141	-	Specification of default UL grant type and exception TC list	8.2.0	8.3.0
2010-06	RAN#48	R5-103846	0142	-	Routine maintenance of TS 36.523-3	8.2.0	8.3.0
2010-06	RAN#48	R5-103847	0143	-	Align the postambles with the new specified UTRA test end states and UE attach implementation capabilities	8.2.0	8.3.0
2010-06	RAN#48	R5s100057	0085	-	Addition of GCF WI-081 RRC test case 8.2.1.1	8.2.0	8.3.0
2010-06	RAN#48	R5s100065	0086	-	Correction of GCF WI 81 EUTRA RLC test case 7.2.2.5.2	8.2.0	8.3.0
2010-06	RAN#48	R5s100068	0092	-	Regression CR for LTE wk07 ATS	8.2.0	8.3.0
2010-06	RAN#48	R5s100072	0091	-	Correction to EPC test case 9.2.2.2.1	8.2.0	8.3.0
2010-06	RAN#48	R5s100073	0090	-	Correction to LTE MAC test case 7.1.2.3 and 7.1.4.5	8.2.0	8.3.0
2010-06	RAN#48	R5s100074	0087	-	Addition of GCF WI 81 EUTRA MAC test case 7.1.3.5	8.2.0	8.3.0
2010-06	RAN#48	R5s100076	0089	-	Corrections to GCF WI-81 EUTRA RLC test cases 7.2.2.1, 7.2.2.3 and 7.2.2.5.1.	8.2.0	8.3.0
2010-06	RAN#48	R5s100077	0088	-	Correction to ‘EUTRA_NASSteps.ttcn’ module (here: APN IE)	8.2.0	8.3.0
2010-06	RAN#48	R5s100078	0113	-	Addition of GCF WI 81 EUTRA RLC test case 7.2.2.8	8.2.0	8.3.0
2010-06	RAN#48	R5s100080	0112	-	Addition of GCF WI 81 EUTRA NAS test case 7.2.3.16	8.2.0	8.3.0
2010-06	RAN#48	R5s100082	0109	-	Addition of GCF WI 81 EUTRA PDCP test case 7.3.1.2	8.2.0	8.3.0
2010-06	RAN#48	R5s100086	0108	-	Addition of GCF WI 82 EPC test case 9.1.2.4	8.2.0	8.3.0
2010-06	RAN#48	R5s100088	0107	-	Addition of GCF WI 82 EPC test case 9.1.2.5	8.2.0	8.3.0
2010-06	RAN#48	R5s100090	0106	-	Addition of GCF WI 82 EPC test case 9.2.3.1.8	8.2.0	8.3.0
2010-06	RAN#48	R5s100092	0110	-	Addition of GCF WI 82 EPC test case 9.1.4.2	8.2.0	8.3.0
2010-06	RAN#48	R5s100094	0105	-	Addition of GCF WI 82 EPC test case 9.3.1.7a	8.2.0	8.3.0
2010-06	RAN#48	R5s100096	0104	-	Addition of GCF WI 82 EPC test case 9.3.1.7	8.2.0	8.3.0

Date	TSG #	TSG Doc.	CR	Rev	Subject/Comment	Old	New
2010-06	RAN#48	R5s100098	0111	-	Addition of GCF WI 82 EPC test case 9.1.3.2	8.2.0	8.3.0
2010-06	RAN#48	R5s100100	0093	-	Addition of GCF WI 81 EUTRA RAB test case 12.2.1	8.2.0	8.3.0
2010-06	RAN#48	R5s100102	0103	-	Addition of GCF WI 81 EUTRA MAC test case 7.1.4.16	8.2.0	8.3.0
2010-06	RAN#48	R5s100104	0099	-	Addition of GCF WI 81 EUTRA RLC test case 7.2.2.10	8.2.0	8.3.0
2010-06	RAN#48	R5s100106	0102	-	Addition of GCF WI -081 test case 8.2.1.3	8.2.0	8.3.0
2010-06	RAN#48	R5s100109	0131	-	Addition of GCF WI-082 EUTRA EPS test case 9.4.1	8.2.0	8.3.0
2010-06	RAN#48	R5s100111	0101	-	Addition of GCF WI 82 EPC NAS test case 9.4.3	8.2.0	8.3.0
2010-06	RAN#48	R5s100113	0100	-	Addition of GCF WI 82 EPC test case 9.4.4	8.2.0	8.3.0
2010-06	RAN#48	R5s100116	0094	-	Regression CR for LTE wk11 ATS	8.2.0	8.3.0
2010-06	RAN#48	R5s100117	0098	-	Addition of GCF WI 82 EPC test case 9.4.2	8.2.0	8.3.0
2010-06	RAN#48	R5s100127	0097	-	Resubmission of GCF WI 82 EPC test case 9.1.2.3	8.2.0	8.3.0
2010-06	RAN#48	R5s100130	0095	-	Resubmission of GCF WI 81 EUTRA MAC test case 7.1.4.8	8.2.0	8.3.0
2010-06	RAN#48	R5s100132	0096	-	Addition of GCF WI 82 EPC test case 9.2.2.1.6	8.2.0	8.3.0
2010-06	RAN#48	R5s100135	0136	-	Baseline upgrade to December-09 Rel-8	8.2.0	8.3.0
2010-06	RAN#48	R5s100136	0130	-	Correction to the test step f_TestcaseIsL2Testcase	8.2.0	8.3.0
2010-06	RAN#48	R5s100137	0129	-	Correction to PDCCH candidate selection based on channel bandwidth under test	8.2.0	8.3.0
2010-06	RAN#48	R5s100138	0127	-	Addition of GCF WI-081 MAC test case 7.1.2.1	8.2.0	8.3.0
2010-06	RAN#48	R5s100140	0128	-	Regression CR for LTE/SAE ATS_10wk11	8.2.0	8.3.0
2010-06	RAN#48	R5s100141	0125	-	Correction to GCF WI 81 EUTRA MAC test case 7.1.3.5	8.2.0	8.3.0
2010-06	RAN#48	R5s100142	0126	-	Correction to EUTRA RLC test case 7.2.3.10	8.2.0	8.3.0
2010-06	RAN#48	R5s100143	0118	-	Addition of GCF WI 81 EUTRA RLC test case 7.2.3.9	8.2.0	8.3.0
2010-06	RAN#48	R5s100145	0119	-	Addition of GCF WI 81 EUTRA RLC test case 7.2.3.13	8.2.0	8.3.0
2010-06	RAN#48	R5s100147	0122	-	Addition of GCF WI 81 EUTRA PDCP test case 7.3.6.1	8.2.0	8.3.0
2010-06	RAN#48	R5s100149	0120	-	Addition of GCF WI 81 EUTRA RRC test case 8.3.1.1	8.2.0	8.3.0
2010-06	RAN#48	R5s100151	0121	-	Addition of GCF WI 81 EUTRA RRC test case 8.5.1.5	8.2.0	8.3.0
2010-06	RAN#48	R5s100153	0123	-	Addition of GCF WI 82 EPC EMM test case 9.2.2.1.1	8.2.0	8.3.0
2010-06	RAN#48	R5s100155	0117	-	Addition of GCF WI 81 EUTRA MAC test case 7.1.7.1.1	8.2.0	8.3.0
2010-06	RAN#48	R5s100157	0116	-	Addition of GCF WI 81 EUTRA MAC test case 7.1.7.1.2	8.2.0	8.3.0
2010-06	RAN#48	R5s100159	0114	-	Addition of GCF WI 81 EUTRA MAC test case 7.1.7.1.3	8.2.0	8.3.0
2010-06	RAN#48	R5s100161	0115	-	Addition of GCF WI 81 EUTRA MAC test case 7.1.7.1.4	8.2.0	8.3.0
2010-06	RAN#48	R5s100163	0124	-	Correction to MME Group ID to set MSB to 1	8.2.0	8.3.0
2010-06	RAN#48	R5s100169	0132	-	Correction of GCF WI-082 EPC test cases 9.1.2.3, 9.1.2.4 and 9.1.2.5	8.2.0	8.3.0
2010-06	RAN#48	R5s100172	0133	-	Further regression CR for LTE/SAE 10wk11 ATS	8.2.0	8.3.0
2010-06	RAN#48	R5s100176	0135	-	Addition of GCF WI 81 EUTRA RRC test case 8.3.1.2	8.2.0	8.3.0
2010-06	RAN#48	R5s100178	0137	-	Addition of GCF WI 81 EUTRA RRC test case 8.2.4.3	8.2.0	8.3.0
2010-06	RAN#48	R5s100180	0138	-	Addition of GCF WI 81 EUTRA RLC test case 7.2.2.11	8.2.0	8.3.0

Date	TSG #	TSG Doc.	CR	Rev	Subject/Comment	Old	New
2010-06	RAN#48	R5s100182	0139	-	Regression CR for LTE wk11 ATS	8.2.0	8.3.0
2010-06	RAN#48	R5s100183	0134	-	Corrections to EUTRA RLC and PDCP test cases	8.2.0	8.3.0
2010-09	RAN#49	R5-104796	0145	-	Routine maintenance of TS 36.523-3	8.3.0	8.4.0
2010-09	RAN#49	R5-104197	0144	-	Addition of MMI command 'DISABLE EPS CAPABILITY'	8.3.0	8.4.0
2010-09	RAN#49	RP-100826	0146	-	CR to 36.523-3: Add new verified and e-mail agreed TTCN test cases in the TC lists in 36.523-3 (prose), Annex A	8.3.0	8.4.0
2010-09	-	-	-	-	Updated the lists of approved test cases for FDD and LCR TDD in Annex A to align with TTCN.	8.3.0	8.4.0
2010-09	RAN#49	R5s100198	0175	-	LTE_TDD : Addition of GCF WI 91 EUTRA RRC test case 8.2.3.1	8.3.0	8.4.0
2010-09	RAN#49	R5s100302	0200	-	Regression CR for LTE/SAE iwd_10wk22 ATS	8.3.0	8.4.0
2010-09	RAN#49	R5s100268	0281	-	Addition of GCF WI 81 EUTRA MAC test case 7.1.6.1	8.3.0	8.4.0
2010-09	RAN#49	R5s100298	0206	-	Addition of GCF WI 81 EUTRA PDCP test case 7.3.5.3	8.3.0	8.4.0
2010-09	RAN#49	R5s100260	0187	-	LTE_TDD : Addition of GCF WI 91 EUTRA MAC test case 7.1.1.2	8.3.0	8.4.0
2010-09	RAN#49	R5s100300	0205	-	Correction to EPC test case 9.3.1.1	8.3.0	8.4.0
2010-09	RAN#49	R5s100226	0194	-	LTE_TDD: Addition of GCF WI 91 EUTRA RLC test case 7.2.3.5	8.3.0	8.4.0
2010-09	RAN#49	R5s100274	0155	-	Regression CR for LTE wk17 ATS	8.3.0	8.4.0
2010-09	RAN#49	R5s100249	0191	-	LTE_TDD: Addition of GCF WI 91 EUTRA RLC test case 7.2.2.1	8.3.0	8.4.0
2010-09	RAN#49	R5s100228	0163	-	LTE_TDD : Addition of GCF WI 91 EUTRA RLC test case 7.2.3.17	8.3.0	8.4.0
2010-09	RAN#49	R5s100293	0279	-	Addition of GCF WI 81 EUTRA DRB test case 12.2.2	8.3.0	8.4.0
2010-09	RAN#49	R5s100224	0195	-	LTE_TDD: Addition of GCF WI 81 EUTRA RLC test case 7.2.3.4	8.3.0	8.4.0
2010-09	RAN#49	R5s100270	0280	-	Addition of GCF WI 81 EUTRA MAC test case 7.1.6.2	8.3.0	8.4.0
2010-09	RAN#49	R5s100266	0152	-	Addition of GCF WI 81 EUTRA RLC test case 7.2.3.7	8.3.0	8.4.0
2010-09	RAN#49	R5s100295	0207	-	Addition of GCF WI 82 ESM test case 10.2.1	8.3.0	8.4.0
2010-09	RAN#49	R5s100210	0170	-	LTE_TDD : Addition of GCF WI 91 EUTRA MAC test case 7.1.2.7	8.3.0	8.4.0
2010-09	RAN#49	R5s100287	0182	-	Correction to TFT filter identifier and precedence values	8.3.0	8.4.0
2010-09	RAN#49	R5s100222	0164	-	LTE_TDD : Addition of GCF WI 91 EUTRA RLC test case 7.2.3.3	8.3.0	8.4.0
2010-09	RAN#49	R5s100214	0168	-	LTE_TDD : Addition of GCF WI 91 EUTRA RLC test case 7.2.2.3	8.3.0	8.4.0
2010-09	RAN#49	R5s100189	0150	-	Regression CR for LTE wk17 ATS	8.3.0	8.4.0
2010-09	RAN#49	R5s100220	0165	-	LTE_TDD : Addition of GCF WI 91 EUTRA RLC test case 7.2.3.2	8.3.0	8.4.0
2010-09	RAN#49	R5s100272	0157	-	Corrections to EUTRA MAC test case.	8.3.0	8.4.0
2010-09	RAN#49	R5s100187	0149	-	Addition of GCF WI 81 EUTRA RRC test case 8.3.1.5	8.3.0	8.4.0
2010-09	RAN#49	R5s100273	0156	-	Corrections to EUTRA RLC test case 7.2.2.6 and 7.2.2.10	8.3.0	8.4.0
2010-09	RAN#49	R5s100279	0181	-	Regression CR for LTE wk22 ATS	8.3.0	8.4.0
2010-09	RAN#49	R5s100208	0171	-	LTE_TDD : Addition of GCF WI 91 EUTRA MAC test case 7.1.2.5	8.3.0	8.4.0
2010-09	RAN#49	R5s100256	0154	-	Addition of GCF WI 81 EUTRA RLC test case 7.2.3.21	8.3.0	8.4.0
2010-09	RAN#49	R5s100283	0184	-	Addition of GCF WI 81 EUTRA PDCP test case 7.3.1.3	8.3.0	8.4.0
2010-09	RAN#49	R5s100291	0180	-	Addition of GCF WI 81 EUTRA MAC test case 7.1.2.6	8.3.0	8.4.0
2010-09	RAN#49	R5s100301	0204	-	Correction to EUTRA test case 7.1.4.6	8.3.0	8.4.0

Date	TSG #	TSG Doc.	CR	Rev	Subject/Comment	Old	New
2010-09	RAN#49	R5s100196	0176	-	LTE_TDD: Addition of GCF WI 91 EUTRA RRC test case 8.2.2.2	8.3.0	8.4.0
2010-09	RAN#49	R5s100258	0188	-	LTE_TDD: Addition of GCF WI 91 EUTRA RLC test case 7.2.3.1	8.3.0	8.4.0
2010-09	RAN#49	R5s100234	0160	-	LTE_TDD : Addition of GCF WI 91 EUTRA PDCP test case 7.3.3.3	8.3.0	8.4.0
2010-09	RAN#49	R5s100303	0217	-	Addition of GCF WI 81 EUTRA MAC test case 7.1.7.2.1	8.3.0	8.4.0
2010-09	RAN#49	R5s100285	0220	-	LTE_TDD : Addition of GCF WI 92 EUTRA Multi layer test case 13.1.1	8.3.0	8.4.0
2010-09	RAN#49	R5s100247	0192	-	LTE_TDD: Addition of GCF WI 81 EUTRA PDCP test case 7.3.3.4	8.3.0	8.4.0
2010-09	RAN#49	R5s100238	0158	-	LTE_TDD : Addition of GCF WI 91 EUTRA PDCP test case 7.3.4.2	8.3.0	8.4.0
2010-09	RAN#49	R5s100240	0148	-	Addition of GCF WI 81 EUTRA RRC test case 8.2.4.2	8.3.0	8.4.0
2010-09	RAN#49	R5s100236	0159	-	LTE_TDD : Addition of GCF WI 91 EUTRA PDCP test case 7.3.4.1	8.3.0	8.4.0
2010-09	RAN#49	R5s100262	0186	-	LTE_TDD : Addition of GCF WI 91 EUTRA MAC test case 7.1.3.5	8.3.0	8.4.0
2010-09	RAN#49	R5s100305	0203	-	Addition of GCF WI 81 EUTRA PDCP test case 7.3.5.2	8.3.0	8.4.0
2010-09	RAN#49	R5s100216	0167	-	LTE_TDD : Addition of GCF WI 91 EUTRA RLC test case 7.2.2.4	8.3.0	8.4.0
2010-09	RAN#49	R5s100218	0166	-	LTE_TDD : Addition of GCF WI 91 EUTRA RLC test case 7.2.2.9	8.3.0	8.4.0
2010-09	RAN#49	R5s100264	0153	-	Addition of GCF WI 81 EUTRA RLC test case 7.2.3.6	8.3.0	8.4.0
2010-09	RAN#49	R5s100281	0185	-	Addition of GCF WI 81 EUTRA Idle Mode test case 6.1.2.3	8.3.0	8.4.0
2010-09	RAN#49	R5s100194	0177	-	LTE_TDD: Addition of GCF WI 91 EUTRA RRC test case 8.2.2.1	8.3.0	8.4.0
2010-09	RAN#49	R5s100190	0179	-	LTE_TDD : Addition of GCF WI 91 EUTRA RRC test case 8.1.1.1	8.3.0	8.4.0
2010-09	RAN#49	R5s100202	0173	-	LTE_TDD : Addition of GCF WI 91 EUTRA MAC test case 7.1.1.1	8.3.0	8.4.0
2010-09	RAN#49	R5s100204	0172	-	LTE_TDD : Addition of GCF WI 91 EUTRA MAC test case 7.1.2.2	8.3.0	8.4.0
2010-09	RAN#49	R5s100253	0189	-	LTE_TDD: Addition of GCF WI 91 EUTRA RRC test case 8.1.3.1	8.3.0	8.4.0
2010-09	RAN#49	R5s100251	0190	-	LTE_TDD: Addition of GCF WI 91 EUTRA RLC test case 7.2.2.2	8.3.0	8.4.0
2010-09	RAN#49	R5s100245	0193	-	LTE_TDD: Addition of GCF WI 91 EUTRA PDCP test case 7.3.3.2	8.3.0	8.4.0
2010-09	RAN#49	R5s100200	0174	-	LTE_TDD : Addition of GCF WI 81 EUTRA RRC test case 8.5.4.1	8.3.0	8.4.0
2010-09	RAN#49	R5s100288	0183	-	Addition of GCF WI 82 EPC Multi-layer test case 13.2.1	8.3.0	8.4.0
2010-09	RAN#49	R5s100192	0178	-	LTE_TDD : Addition of GCF WI 91 EUTRA RRC test case 8.1.2.1	8.3.0	8.4.0
2010-09	RAN#49	R5s100230	0162	-	LTE_TDD : Addition of GCF WI 91 EUTRA RLC test case 7.2.3.20	8.3.0	8.4.0
2010-09	RAN#49	R5s100242	0147	-	Addition of GCF WI 81 EUTRA RRC test case 8.2.4.5	8.3.0	8.4.0
2010-09	RAN#49	R5s100307	0202	-	Addition of GCF WI 81 EUTRA PDCP test case 7.3.5.4	8.3.0	8.4.0
2010-09	RAN#49	R5s100309	0201	-	Addition of GCF WI 81 EUTRA PDCP test case 7.3.5.5	8.3.0	8.4.0
2010-09	RAN#49	R5s100311	0197	-	Addition of GCF WI-081 EUTRA RRC test case 8.1.2.5	8.3.0	8.4.0
2010-09	RAN#49	R5s100313	0199	-	Addition of GCF WI 82 ESM test case 10.5.1	8.3.0	8.4.0
2010-09	RAN#49	R5s100317	0198	-	Addition of GCF WI 81 EUTRA RRC test case 8.1.2.7	8.3.0	8.4.0
2010-09	RAN#49	R5s100319	0196	-	Addition of GCF WI 81 EUTRA RRC test case 8.5.1.3	8.3.0	8.4.0
2010-09	RAN#49	R5s100321	0219	-	Correction to EUTRA MAC 7.1.7.1.x test cases	8.3.0	8.4.0
2010-09	RAN#49	R5s100322	0218	-	Addition of GCF WI 82 EPC test case 9.2.1.1.20	8.3.0	8.4.0
2010-09	RAN#49	R5s100324	0216	-	Addition of GCF WI 81 EUTRA RRC test case 8.5.1.1	8.3.0	8.4.0
2010-09	RAN#49	R5s100326	0215	-	Addition of GCF WI 82 EPC test case 10.6.1	8.3.0	8.4.0

Date	TSG #	TSG Doc.	CR	Rev	Subject/Comment	Old	New
2010-09	RAN#49	R5s100329	0211	-	LTE_TDD: Addition of GCF WI 91 EUTRA MAC test case 7.1.2.3	8.3.0	8.4.0
2010-09	RAN#49	R5s100331	0210	-	LTE_TDD: Addition of GCF WI 91 EUTRA MAC test case 7.1.2.9	8.3.0	8.4.0
2010-09	RAN#49	R5s100333	0209	-	LTE_TDD: Addition of GCF WI 91 EUTRA MAC test case 7.1.4.1	8.3.0	8.4.0
2010-09	RAN#49	R5s100335	0244	-	LTE_TDD: Addition of GCF WI 91 EUTRA MAC test case 7.1.7.1.2	8.3.0	8.4.0
2010-09	RAN#49	R5s100337	0243	-	LTE_TDD: Addition of GCF WI 91 EUTRA MAC test case 7.1.7.1.4	8.3.0	8.4.0
2010-09	RAN#49	R5s100339	0208	-	LTE_TDD: Addition of GCF WI 91 EUTRA RLC-UM test case 7.2.2.5.1	8.3.0	8.4.0
2010-09	RAN#49	R5s100341	0212	-	LTE_TDD: Addition of GCF WI 91 EUTRA RLC-UM test case 7.2.2.6	8.3.0	8.4.0
2010-09	RAN#49	R5s100343	0213	-	LTE_TDD: Addition of GCF WI 91 EUTRA RLC test case 7.2.2.7	8.3.0	8.4.0
2010-09	RAN#49	R5s100345	0242	-	LTE_TDD: Addition of GCF WI 91 EUTRA DRB test case 12.2.1	8.3.0	8.4.0
2010-09	RAN#49	R5s100347	0214	-	Correction of GCF WI-081 E-UTRA PDCP test case 7.3.6.1	8.3.0	8.4.0
2010-09	RAN#49	R5s100348	0221	-	Addition of GCF WI-081 E-UTRA RRC test case 8.1.3.4	8.3.0	8.4.0
2010-09	RAN#49	R5s100350	0264	-	Addition of GCF WI-082 EMM test case 9.2.1.1.9	8.3.0	8.4.0
2010-09	RAN#49	R5s100184	0151	-	TTCN Correction to 36.523-3 LTE/SAE NAS definition of LAIList	8.3.0	8.4.0
2010-09	RAN#49	R5s100232	0161	-	LTE_TDD : Addition of GCF WI 91 EUTRA PDCP test case 7.3.3.1	8.3.0	8.4.0
2010-09	RAN#49	R5s100352	0263	-	Addition of GCF WI-082 EMM test case 9.2.1.1.10	8.3.0	8.4.0
2010-09	RAN#49	R5s100354	0233	-	Corrections to EUTRA MAC test case 7.1.3.1	8.3.0	8.4.0
2010-09	RAN#49	R5s100356	0232	-	Corrections to EUTRA Idle Mode Testcases 6.1.2.3	8.3.0	8.4.0
2010-09	RAN#49	R5s100358	0241	-	Addition of GCF WI 82 EPC test case 9.2.1.1.14	8.3.0	8.4.0
2010-09	RAN#49	R5s100360	0286	-	Addition of GCF WI 82 ESM test case 10.3.1	8.3.0	8.4.0
2010-09	RAN#49	R5s100362	0285	-	Addition of GCF WI 82 ESM test case 10.7.1	8.3.0	8.4.0
2010-09	RAN#49	R5s100364	0293	-	Addition of GCF WI 82 ESM test case 10.7.2	8.3.0	8.4.0
2010-09	RAN#49	R5s100366	0240	-	LTE_TDD: Addition of GCF WI 91 EUTRA MAC test case 7.1.3.1	8.3.0	8.4.0
2010-09	RAN#49	R5s100368	0239	-	LTE_TDD: Addition of GCF WI 91 EUTRA MAC test case 7.1.3.3	8.3.0	8.4.0
2010-09	RAN#49	R5s100370	0238	-	LTE_TDD: Addition of GCF WI 91 EUTRA MAC test case 7.1.3.4	8.3.0	8.4.0
2010-09	RAN#49	R5s100372	0237	-	LTE_TDD: Addition of GCF WI 91 EUTRA MAC test case 7.1.3.6	8.3.0	8.4.0
2010-09	RAN#49	R5s100374	0236	-	LTE_TDD: Addition of GCF WI 91 EUTRA MAC test case 7.1.3.7	8.3.0	8.4.0
2010-09	RAN#49	R5s100376	0235	-	LTE_TDD: Addition of GCF WI 91 EUTRA MAC test case 7.1.4.4	8.3.0	8.4.0
2010-09	RAN#49	R5s100378	0234	-	LTE_TDD: Addition of GCF WI 91 EUTRA MAC test case 7.1.4.13	8.3.0	8.4.0
2010-09	RAN#49	R5s100380	0231	-	Corrections to EUTRA EMM Testcases 9.2.1.1.20	8.3.0	8.4.0
2010-09	RAN#49	R5s100381	0227	-	LTE_TDD: Addition of GCF WI 91 EUTRA MAC test case 7.1.2.6	8.3.0	8.4.0
2010-09	RAN#49	R5s100383	0226	-	LTE_TDD: Addition of GCF WI 91 EUTRA RLC test case 7.2.3.18	8.3.0	8.4.0
2010-09	RAN#49	R5s100385	0230	-	Correction to EUTRA DRB test cases 12.2.1, 12.2.2, 12.2.3, 12.2.4	8.3.0	8.4.0
2010-09	RAN#49	R5s100386	0229	-	Correction to GCF WI-081 EUTRA RLC Testcase 7.2.3.10	8.3.0	8.4.0
2010-09	RAN#49	R5s100387	0228	-	Correction to GCF WI-081 EUTRA RLC Testcase 7.2.3.16	8.3.0	8.4.0
2010-09	RAN#49	R5s100388	0224	-	LTE_TDD: Addition of GCF WI 91 EUTRA RLC test case 7.2.2.5.2	8.3.0	8.4.0
2010-09	RAN#49	R5s100390	0223	-	LTE_TDD: Addition of GCF WI 91 EUTRA RRC test case 8.2.1.1	8.3.0	8.4.0
2010-09	RAN#49	R5s100392	0225	-	Correction to the function fl_EUTRA_InitPhysicalCellId	8.3.0	8.4.0

Date	TSG #	TSG Doc.	CR	Rev	Subject/Comment	Old	New
2010-09	RAN#49	R5s100394	0222	-	Addition of GCF WI 82 EPC test case 9.2.3.1.2	8.3.0	8.4.0
2010-09	RAN#49	R5s100398	0262	-	Regression CR for LTE wk26 ATS	8.3.0	8.4.0
2010-09	RAN#49	R5s100400	0300	-	LTE_TDD: Addition of GCF WI 91 EUTRA Idle Mode test case 6.1.2.2	8.3.0	8.4.0
2010-09	RAN#49	R5s100402	0299	-	LTE_TDD: Addition of GCF WI 91 EUTRA PDCP test case 7.3.1.1	8.3.0	8.4.0
2010-09	RAN#49	R5s100405	0253	-	LTE_TDD:Corrections to EUTRA RLC test cases regarding subframe offset calculation for TDD	8.3.0	8.4.0
2010-09	RAN#49	R5s100406	0261	-	LTE_TDD: Addition of GCF WI 91 EUTRA RLC AM test case 7.2.3.6	8.3.0	8.4.0
2010-09	RAN#49	R5s100212	0169	-	LTE_TDD : Addition of GCF WI 91 EUTRA MAC test case 7.1.4.15	8.3.0	8.4.0
2010-09	RAN#49	R5s100408	0260	-	LTE_TDD: Addition of GCF WI 91 EUTRA RLC AM test case 7.2.3.7	8.3.0	8.4.0
2010-09	RAN#49	R5s100412	0259	-	LTE_TDD: Addition of GCF WI 91 EUTRA RLC AM test case 7.2.3.8	8.3.0	8.4.0
2010-09	RAN#49	R5s100414	0258	-	LTE_TDD: Addition of GCF WI 91 EUTRA RLC AM test case 7.2.3.9	8.3.0	8.4.0
2010-09	RAN#49	R5s100416	0257	-	LTE_TDD: Addition of GCF WI 91 EUTRA RLC AM test case 7.2.3.14	8.3.0	8.4.0
2010-09	RAN#49	R5s100418	0256	-	LTE_TDD: Addition of GCF WI 91 EUTRA RLC AM test case 7.2.3.15	8.3.0	8.4.0
2010-09	RAN#49	R5s100420	0278	-	LTE_TDD: Addition of GCF WI 91 EUTRA MAC test case 7.1.4.8	8.3.0	8.4.0
2010-09	RAN#49	R5s100422	0277	-	LTE_TDD: Addition of GCF WI 91 EUTRA MAC test case 7.1.7.1.1	8.3.0	8.4.0
2010-09	RAN#49	R5s100424	0275	-	LTE_TDD: Addition of GCF WI 91 EUTRA RLC UM test case 7.2.2.8	8.3.0	8.4.0
2010-09	RAN#49	R5s100426	0274	-	LTE_TDD: Addition of GCF WI 91 EUTRA RLC AM test case 7.2.3.13	8.3.0	8.4.0
2010-09	RAN#49	R5s100430	0289	-	LTE_TDD: Addition of GCF WI 91 EUTRA RLC AM test case 7.2.3.21	8.3.0	8.4.0
2010-09	RAN#49	R5s100432	0273	-	LTE_TDD: Addition of GCF WI 91 EUTRA PDCP test case 7.3.1.2	8.3.0	8.4.0
2010-09	RAN#49	R5s100434	0272	-	LTE_TDD: Addition of GCF WI 91 EUTRA PDCP test case 7.3.6.1	8.3.0	8.4.0
2010-09	RAN#49	R5s100436	0271	-	LTE_TDD: Addition of GCF WI 91 EUTRA RRC test case 8.2.1.3	8.3.0	8.4.0
2010-09	RAN#49	R5s100438	0270	-	LTE_TDD: Addition of GCF WI 91 EUTRA RRC test case 8.3.1.1	8.3.0	8.4.0
2010-09	RAN#49	R5s100440	0269	-	LTE_TDD: Addition of GCF WI 91 EUTRA RRC test case 8.3.1.2	8.3.0	8.4.0
2010-09	RAN#49	R5s100442	0268	-	LTE_TDD: Addition of GCF WI 91 EUTRA RRC test case 8.5.1.5	8.3.0	8.4.0
2010-09	RAN#49	R5s100444	0267	-	LTE_TDD: Addition of GCF WI 91 EUTRA DRB test case 12.2.2	8.3.0	8.4.0
2010-09	RAN#49	R5s100446	0276	-	LTE_TDD: Addition of GCF WI 91 EUTRA MAC test case 7.1.7.2.1	8.3.0	8.4.0
2010-09	RAN#49	R5s100457	0255	-	Correction of GCF WI-081 E-UTRA MAC test case 7.1.2.4	8.3.0	8.4.0
2010-09	RAN#49	R5s100458	0254	-	Correction of GCF WI-081 E-UTRA MAC test case 7.1.2.7	8.3.0	8.4.0
2010-09	RAN#49	R5s100459	0250	-	Corrections to GCF WI-081EUTRA RRC Testcase 8.5.1.1	8.3.0	8.4.0
2010-09	RAN#49	R5s100461	0249	-	Corrections to GCF WI-082 EUTRA ESM Testcase 10.6.1	8.3.0	8.4.0
2010-09	RAN#49	R5s100462	0252	-	Correction of GCF WI-081 E-UTRA MAC test case 7.1.3.1	8.3.0	8.4.0
2010-09	RAN#49	R5s100463	0251	-	Correction of GCF WI-081 E-UTRA MAC test case 7.1.3.4	8.3.0	8.4.0
2010-09	RAN#49	R5s100464	0288	-	Addition of GCF WI 82 ESM test case 10.4.1	8.3.0	8.4.0
2010-09	RAN#49	R5s100466	0247	-	Regression CR for LTE wk26 ATS	8.3.0	8.4.0
2010-09	RAN#49	R5s100468	0248	-	Corrections to GCF WI-081EUTRA RLC Testcase 7.2.3.4	8.3.0	8.4.0
2010-09	RAN#49	R5s100469	0265	-	Corrections to GCF WI-081EUTRA DRB Testcase 12.2.1 and 12.2.2	8.3.0	8.4.0
2010-09	RAN#49	R5s100472	0287	-	LTE_TDD: Addition of GCF WI 91 EUTRA RLC test case 7.2.2.11	8.3.0	8.4.0
2010-09	RAN#49	R5s100475	0266	-	Addition of GCF WI 81 EUTRA Idle Mode test case 6.1.2.6	8.3.0	8.4.0

Date	TSG #	TSG Doc.	CR	Rev	Subject/Comment	Old	New
2010-09	RAN#49	R5s100477	0298	-	Addition of GCF WI-081 E-UTRA RRC test case 8.2.4.6	8.3.0	8.4.0
2010-09	RAN#49	R5s100479	0246	-	Corrections to GCF WI-082 EUTRA ESM Testcase 10.6.1	8.3.0	8.4.0
2010-09	RAN#49	R5s100485	0245	-	Regression CR for LTE/SAE 10wk26 ATS [Revision of R5s100485]	8.3.0	8.4.0
2010-09	RAN#49	R5s100487	0284	-	Addition of GCF WI 82 EMM test case 9.2.3.1.1	8.3.0	8.4.0
2010-09	RAN#49	R5s100489	0283	-	LTE_TDD: Addition of GCF WI 91 EUTRA PDCP test case 7.3.1.3	8.3.0	8.4.0
2010-09	RAN#49	R5s100491	0282	-	Addition of GCF WI-081 E-UTRA RRC test case 8.3.1.8	8.3.0	8.4.0
2010-09	RAN#49	R5s100495	0290	-	Addition of GCF WI-081 E-UTRA RRC test case 8.3.1.3	8.3.0	8.4.0
2010-09	RAN#49	R5s100496	0292	-	Addition of GCF WI 81 EUTRA RRC test case 8.2.4.1	8.3.0	8.4.0
2010-09	RAN#49	R5s100498	0291	-	Addition of GCF WI 81 EUTRA RRC test case 8.2.4.7	8.3.0	8.4.0
2010-09	RAN#49	R5s100500	0297	-	Addition of GCF WI 81 EUTRA IDLE MODE test case 6.1.2.8	8.3.0	8.4.0
2010-09	RAN#49	R5s100503	0295	-	Addition of GCF WI-081 E-UTRA Idle Mode test case 6.1.2.11	8.3.0	8.4.0
2010-09	RAN#49	R5s100505	0294	-	Addition of GCF WI-081 E-UTRA Idle Mode test case 6.1.2.15	8.3.0	8.4.0
2010-09	RAN#49	R5s100507	0296	-	Addition of GCF WI 81 EUTRA IDLE MODE test case 6.1.2.9	8.3.0	8.4.0
2010-12	RAN#50	R5-106578	0301	-	Clarification on cell power change time	8.4.0	8.5.0
2010-12	RAN#50	R5-106675	0302	-	LTE test model updates	8.4.0	8.5.0
2010-12	RAN#50	RP-101151	0303	-	CR to 36.523-3: Add new verified and e-mail agreed TTCN test cases in the TC lists in 36.523-3 (prose), Annex A	8.4.0	8.5.0
2010-12	RAN#50	R5s100399	0307	-	Corrections to EUTRA RLC test case 7.2.3.2, 7.2.3.5, 7.2.3.18, 7.2.3.10	8.4.0	8.5.0
2010-12	RAN#50	R5s100448	0381	-	LTE_TDD: Addition of GCF WI 91 EUTRA Idle Mode test case 6.1.2.4	8.4.0	8.5.0
2010-12	RAN#50	R5s100450	0380	-	LTE_TDD: Addition of GCF WI 91 EUTRA MAC test case 7.1.2.1	8.4.0	8.5.0
2010-12	RAN#50	R5s100454	0379	-	LTE_TDD: Addition of GCF WI 92 EUTRA Multi-layer test case 13.2.1	8.4.0	8.5.0
2010-12	RAN#50	R5s100470	0305	-	Addition of GCF WI 82 ESM test case 10.8.1	8.4.0	8.5.0
2010-12	RAN#50	R5s100473	0309	-	Addition of GCF WI 81 EUTRA MAC test case 7.1.4.3	8.4.0	8.5.0
2010-12	RAN#50	R5s100493	0306	-	Addition of GCF WI-081 E-UTRA RRC test case 8.3.1.9	8.4.0	8.5.0
2010-12	RAN#50	R5s100513	0304	-	LTE_TDD: Correction to f_EUTRA_SS_ConfigureActiveCell to configure Tcell and sfn offset	8.4.0	8.5.0
2010-12	RAN#50	R5s100515	0320	-	Correction to GCF WI-081 E-UTRA RRC test case 8.2.4.5	8.4.0	8.5.0
2010-12	RAN#50	R5s100516	0319	-	Addition of GCF WI 81 EUTRA RRC test case 8.3.1.10	8.4.0	8.5.0
2010-12	RAN#50	R5s100520	0318	-	Regression CR for LTE wk33 ATS	8.4.0	8.5.0
2010-12	RAN#50	R5s100522	0308	-	Addition of GCF WI 81 EUTRA MAC test case 7.1.4.11	8.4.0	8.5.0
2010-12	RAN#50	R5s100524	0316	-	Correction to GCF WI-081 E-UTRA RRC test cases 8.2.4.x	8.4.0	8.5.0
2010-12	RAN#50	R5s100525	0317	-	Addition of GCF WI 81 EUTRA MAC test case 7.1.2.8	8.4.0	8.5.0
2010-12	RAN#50	R5s100527	0315	-	Addition of GCF WI 81 EUTRA Idle Mode test case 6.1.2.7	8.4.0	8.5.0
2010-12	RAN#50	R5s100529	0314	-	Addition of GCF WI 81 EUTRA MAC test case 7.1.4.12	8.4.0	8.5.0
2010-12	RAN#50	R5s100531	0310	-	Correction of GCF WI-081 E-UTRA RLC test case 7.2.3.9	8.4.0	8.5.0
2010-12	RAN#50	R5s100532	0325	-	Corrections to GCF WI-081EUTRA MAC Testcase 7.1.1.1	8.4.0	8.5.0
2010-12	RAN#50	R5s100533	0313	-	Corrections to GCF WI-081 EUTRA MAC Testcase 7.1.4.10	8.4.0	8.5.0
2010-12	RAN#50	R5s100535	0312	-	Corrections to Usage of Float Values in LTE TTCN ATS	8.4.0	8.5.0
2010-12	RAN#50	R5s100536	0311	-	Correction to GCF WI-082 E_UTRA EMM test case 9.2.3.1.5	8.4.0	8.5.0

Date	TSG #	TSG Doc.	CR	Rev	Subject/Comment	Old	New
2010-12	RAN#50	R5s100538	0321	-	Regression CR for LTE wk37 ATS	8.4.0	8.5.0
2010-12	RAN#50	R5s100539	0324	-	Correction to GCF WI-081 E-UTRA RRC test cases 8.1.2.7	8.4.0	8.5.0
2010-12	RAN#50	R5s100541	0323	-	Addition of GCF WI 81 EUTRA RRC test case 8.1.3.5	8.4.0	8.5.0
2010-12	RAN#50	R5s100545	0322	-	Addition of GCF WI 82 EMM test case 9.2.1.1.1a	8.4.0	8.5.0
2010-12	RAN#50	R5s100548	0328	-	Correction of GCF WI-081 EUTRA RRC test case 8.2.4.6	8.4.0	8.5.0
2010-12	RAN#50	R5s100549	0327	-	Correction of GCF WI-082 EPC test case 10.7.2	8.4.0	8.5.0
2010-12	RAN#50	R5s100550	0326	-	Correction of GCF WI-082 EPC test case 10.3.1	8.4.0	8.5.0
2010-12	RAN#50	R5s100555	0338	-	Correction to GCF WI-082 EMM test case 9.2.3.1.8	8.4.0	8.5.0
2010-12	RAN#50	R5s100556	0329	-	Regression TTCN CR for IWD D10_wk37 ATS	8.4.0	8.5.0
2010-12	RAN#50	R5s100557	0337	-	Correction to AT commands used in LTE ATS	8.4.0	8.5.0
2010-12	RAN#50	R5s100558	0336	-	Correction of GCF WI-081 EUTRA MAC test case 7.1.4.16	8.4.0	8.5.0
2010-12	RAN#50	R5s100559	0335	-	Correction to L2 test cases to allow HARQ retransmissions	8.4.0	8.5.0
2010-12	RAN#50	R5s100560	0334	-	Correction to GCF WI-081 EUTRA PDCP test cases 7.3.5.x	8.4.0	8.5.0
2010-12	RAN#50	R5s100561	0333	-	Correction to GCF WI-081 EUTRA RRC test case 8.2.4.5	8.4.0	8.5.0
2010-12	RAN#50	R5s100562	0332	-	Correction to GCF WI-081 EUTRA PDCP test case 7.3.5.4	8.4.0	8.5.0
2010-12	RAN#50	R5s100563	0330	-	Correction to GCF WI-081 EUTRA MAC test case 7.1.3.7	8.4.0	8.5.0
2010-12	RAN#50	R5s100564	0331	-	Correction to GCF WI-081 EUTRA RRC test case 8.5.1.1	8.4.0	8.5.0
2010-12	RAN#50	R5s100566	0341	-	Correction to GCF WI-081 EUTRA RLC test case 7.2.3.14	8.4.0	8.5.0
2010-12	RAN#50	R5s100571	0386	-	Correction of GCF WI-081 E-UTRA MAC test case 7.1.4.5	8.4.0	8.5.0
2010-12	RAN#50	R5s100572	0340	-	Correction of GCF WI-081 E-UTRA MAC test case 7.1.2.3	8.4.0	8.5.0
2010-12	RAN#50	R5s100573	0347	-	Correction to GCF WI-081 EUTRA RRC Testcase 8.2.4.3	8.4.0	8.5.0
2010-12	RAN#50	R5s100576	0339	-	Correction to GCF WI-081 EUTRA RRC Testcase 8.2.4.1	8.4.0	8.5.0
2010-12	RAN#50	R5s100579	0343	-	Correction to GCF WI-081 EUTRA PDCP test case 7.3.5.5	8.4.0	8.5.0
2010-12	RAN#50	R5s100580	0342	-	Correction to GCF WI-081 EUTRA RRC Testcase 8.3.1.10	8.4.0	8.5.0
2010-12	RAN#50	R5s100582	0352	-	Addition of GCF WI 82 EMM test case 9.2.1.1.15	8.4.0	8.5.0
2010-12	RAN#50	R5s100584	0351	-	Addition of GCF WI 82 EMM test case 9.2.1.1.17	8.4.0	8.5.0
2010-12	RAN#50	R5s100586	0385	-	Addition of GCF WI 82 EMM SMS test case 11.1.1	8.4.0	8.5.0
2010-12	RAN#50	R5s100588	0384	-	Addition of GCF WI 82 EMM SMS test case 11.1.2	8.4.0	8.5.0
2010-12	RAN#50	R5s100590	0350	-	Addition of GCF WI 81 EUTRA test case 6.1.2.5	8.4.0	8.5.0
2010-12	RAN#50	R5s100592	0349	-	Correction to GCF WI-081 EUTRA MAC Testcase 7.1.3.6	8.4.0	8.5.0
2010-12	RAN#50	R5s100593	0348	-	Correction to GCF WI-081 EUTRA MAC Testcase 7.1.4.13	8.4.0	8.5.0
2010-12	RAN#50	R5s100595	0346	-	Correction to GCF WI-081 EUTRA RLC Testcase 7.2.2.11	8.4.0	8.5.0
2010-12	RAN#50	R5s100597	0345	-	Addition of GCF WI 81 EUTRA RRC test case 9.2.1.1.13	8.4.0	8.5.0
2010-12	RAN#50	R5s100604	0383	-	Addition of GCF WI 82 EMM SMS test case 11.1.3	8.4.0	8.5.0
2010-12	RAN#50	R5s100606	0382	-	Addition of GCF WI 82 EMM SMS test case 11.1.4	8.4.0	8.5.0
2010-12	RAN#50	R5s100608	0344	-	Correction of GCF WI-081 E-UTRA TAU	8.4.0	8.5.0
2010-12	RAN#50	R5s100610	0367	-	Addition of GCF WI 82 EMM test case 9.2.1.1.7	8.4.0	8.5.0

Date	TSG #	TSG Doc.	CR	Rev	Subject/Comment	Old	New
2010-12	RAN#50	R5s100614	0364	-	LTE_TDD: Addition of GCF WI 91 EUTRA Idle Mode test case 6.1.2.3	8.4.0	8.5.0
2010-12	RAN#50	R5s100616	0363	-	LTE_TDD: Addition of GCF WI 91 EUTRA MAC test case 7.1.2.8	8.4.0	8.5.0
2010-12	RAN#50	R5s100618	0362	-	LTE_TDD: Addition of GCF WI 91 EUTRA MAC test case 7.1.4.5	8.4.0	8.5.0
2010-12	RAN#50	R5s100620	0361	-	LTE_TDD: Addition of GCF WI 91 EUTRA MAC test case 7.1.4.6	8.4.0	8.5.0
2010-12	RAN#50	R5s100622	0360	-	LTE_TDD: Addition of GCF WI 91 EUTRA MAC test case 7.1.4.7	8.4.0	8.5.0
2010-12	RAN#50	R5s100624	0366	-	Addition of GCF WI 82 EMM test case 9.2.3.1.4	8.4.0	8.5.0
2010-12	RAN#50	R5s100626	0359	-	LTE_TDD: Addition of GCF WI 91 EUTRA MAC test case 7.1.4.10	8.4.0	8.5.0
2010-12	RAN#50	R5s100628	0358	-	LTE_TDD: Addition of GCF WI 91 EUTRA MAC test case 7.1.4.16	8.4.0	8.5.0
2010-12	RAN#50	R5s100632	0357	-	LTE_TDD: Addition of GCF WI 91 EUTRA RLC test case 7.2.3.10	8.4.0	8.5.0
2010-12	RAN#50	R5s100634	0356	-	LTE_TDD: Addition of GCF WI 91 EUTRA RLC test case 7.2.3.16	8.4.0	8.5.0
2010-12	RAN#50	R5s100636	0355	-	LTE_TDD: Addition of GCF WI 91 EUTRA RRC test case 8.2.4.3	8.4.0	8.5.0
2010-12	RAN#50	R5s100638	0354	-	LTE_TDD: Addition of GCF WI 91 EUTRA RRC test case 8.5.1.1	8.4.0	8.5.0
2010-12	RAN#50	R5s100640	0365	-	Addition of GCF WI 82 EMM test case 9.2.1.2.4	8.4.0	8.5.0
2010-12	RAN#50	R5s100642	0353	-	LTE_TDD: Addition of GCF WI 91 EUTRA MAC test case 7.1.7.1.3	8.4.0	8.5.0
2010-12	RAN#50	R5s100644	0378	-	LTE_TDD: Addition of GCF WI 91 EUTRA Idle Mode test case 6.1.2.6	8.4.0	8.5.0
2010-12	RAN#50	R5s100646	0377	-	LTE_TDD: Addition of GCF WI 91 EUTRA RRC test case 8.1.2.5	8.4.0	8.5.0
2010-12	RAN#50	R5s100648	0376	-	LTE_TDD: Addition of GCF WI 91 EUTRA RRC test case 8.2.4.2	8.4.0	8.5.0
2010-12	RAN#50	R5s100650	0375	-	LTE_TDD: Addition of GCF WI 91 EUTRA RRC test case 8.2.4.5	8.4.0	8.5.0
2010-12	RAN#50	R5s100652	0374	-	LTE_TDD: Addition of GCF WI 91 EUTRA RRC test case 8.3.1.5	8.4.0	8.5.0
2010-12	RAN#50	R5s100654	0373	-	LTE_TDD: Addition of GCF WI 91 EUTRA RRC test case 8.3.1.8	8.4.0	8.5.0
2010-12	RAN#50	R5s100656	0372	-	LTE_TDD: Addition of GCF WI 91 EUTRA RRC test case 8.5.1.3	8.4.0	8.5.0
2010-12	RAN#50	R5s100658	0368	-	LTE_TDD: Addition of GCF WI 91 EUTRA MAC test case 7.1.4.11	8.4.0	8.5.0
2010-12	RAN#50	R5s100660	0371	-	Addition of GCF WI 82 EMM test case 9.2.2.2.2	8.4.0	8.5.0
2010-12	RAN#50	R5s100662	0370	-	Addition of GCF WI 82 EMM test case 9.2.1.2.1	8.4.0	8.5.0
2010-12	RAN#50	R5s100664	0369	-	Addition of GCF WI 82 EMM test case 9.2.3.2.1	8.4.0	8.5.0
2010-12	RAN#50	R5s100669	0390	-	LTE_TDD: Addition of GCF WI 91 EUTRA PDCP test case 7.3.5.4	8.4.0	8.5.0
2010-12	RAN#50	R5s100671	0389	-	LTE_TDD: Addition of GCF WI 91 EUTRA RRC test case 8.2.4.1	8.4.0	8.5.0
2010-12	RAN#50	R5s100673	0388	-	LTE_TDD: Addition of GCF WI 91 EUTRA RRC test case 8.3.1.9	8.4.0	8.5.0
2010-12	RAN#50	R5s100675	0398	-	Addition of GCF WI 81 EUTRA IDLE MODE test case 6.1.1.1	8.4.0	8.5.0
2010-12	RAN#50	R5s100678	0401	-	Addition of GCF WI 81 RRC test case 8.3.1.7	8.4.0	8.5.0
2010-12	RAN#50	R5s100680	0400	-	Addition of GCF WI 81 EUTRA RRC test case 8.1.2.3	8.4.0	8.5.0
2010-12	RAN#50	R5s100682	0399	-	Addition of GCF WI 81 EUTRA RRC test case 8.1.1.2	8.4.0	8.5.0
2010-12	RAN#50	R5s100688	0397	-	Addition of GCF WI 82 EMM test case 9.2.1.1.21	8.4.0	8.5.0
2010-12	RAN#50	R5s100690	0396	-	Addition of GCF WI 84 EMM test case 9.2.1.1.22	8.4.0	8.5.0
2010-12	RAN#50	R5s100692	0402	-	Regression CR for LTE wk42 ATS	8.4.0	8.5.0
2010-12	RAN#50	R5s100693	0393	-	Addition of GCF WI 82 ESM test case 10.8.2	8.4.0	8.5.0
2010-12	RAN#50	R5s100695	0392	-	Addition of GCF WI 82 ESM test case 10.8.3	8.4.0	8.5.0

Date	TSG #	TSG Doc.	CR	Rev	Subject/Comment	Old	New
2010-12	RAN#50	R5s100697	0391	-	Addition of GCF WI 82 EMM test case 9.3.1.17	8.4.0	8.5.0
2010-12	RAN#50	R5s100699	0395	-	Addition of GCF WI 82 EUTRA DRB test case 12.2.3	8.4.0	8.5.0
2010-12	RAN#50	R5s100701	0394	-	Addition of GCF WI 82 EMM test case 9.2.1.1.19	8.4.0	8.5.0
2010-12	RAN#50	R5s100703	0387	-	Addition of GCF WI 81 EUTRA RRC test case 8.1.1.6	8.4.0	8.5.0
2010-12	RAN#50	R5s100705	0408	-	Addition of GCF Priority 3 E-UTRA RRC test case 8.2.1.7	8.4.0	8.5.0
2010-12	RAN#50	R5s100707	0407	-	Addition of GCF Priority 3 E-UTRA RRC test case 8.5.1.2	8.4.0	8.5.0
2010-12	RAN#50	R5s100709	0406	-	Correction of GCF WI-081 Test Case 7.1.4.5	8.4.0	8.5.0
2010-12	RAN#50	R5s100712	0405	-	Addition of GCF WI 82 ESM test case 10.7.3	8.4.0	8.5.0
2010-12	RAN#50	R5s100714	0404	-	Addition of GCF WI 81 EUTRA RRC test case 8.2.4.4	8.4.0	8.5.0
2010-12	RAN#50	R5s100720	0403	-	Addition of GCF WI 82 Multilayer test case 13.3.1.1	8.4.0	8.5.0
2010-12	RAN#50	R5s100722	0409	-	Addition of GCF WI 82 EMM test case 9.2.1.1.23	8.4.0	8.5.0
2010-12	RAN#50	R5s100724	0414	-	Correction to IP address allocation and ESM cause for condition IPv4viaNAS_TestMode	8.4.0	8.5.0
2010-12	RAN#50	R5s100725	0413	-	Correction of the q-RxLevMin value in the sib5 interFreqCarrierFreqList	8.4.0	8.5.0
2010-12	RAN#50	R5s100726	0411	-	LTE_TDD: Resubmission of GCF WI 91 EUTRA RLC test case 7.2.2.10	8.4.0	8.5.0
2010-12	RAN#50	R5s100728	0412	-	Addition of GCF WI 82 EMM test case 9.3.1.16	8.4.0	8.5.0
2010-12	RAN#50	R5s100730	0410	-	Addition of GCF WI 82 EMM test case 9.2.2.1.2	8.4.0	8.5.0
2010-12	RAN#50	R5s100732	0422	-	LTE_TDD: Addition of GCF WI 91 EUTRA Idle mode test case 6.1.2.11	8.4.0	8.5.0
2010-12	RAN#50	R5s100734	0421	-	LTE_TDD: Addition of GCF WI 91 EUTRA Idle mode test case 6.1.2.8	8.4.0	8.5.0
2010-12	RAN#50	R5s100738	0419	-	LTE_TDD: Addition of GCF WI 91 EUTRA RRC test case 8.3.1.3	8.4.0	8.5.0
2010-12	RAN#50	R5s100740	0418	-	LTE_TDD: Addition of GCF WI 93 EUTRA RRC test case 8.3.1.7	8.4.0	8.5.0
2010-12	RAN#50	R5s100742	0417	-	LTE_TDD: Addition of GCF WI 91 EUTRA PDCP test case 7.3.5.5	8.4.0	8.5.0
2010-12	RAN#50	R5s100744	0416	-	Addition of GCF WI 82 Multilayer test case 13.3.1.2	8.4.0	8.5.0
2010-12	RAN#50	R5s100746	0415	-	Addition of GCF WI 82 ESM test case 10.7.4	8.4.0	8.5.0
2010-12	RAN#50	R5s100748	0423	-	Addition of GCF P3 E-UTRA ESM test case 10.5.3	8.4.0	8.5.0
2010-12	RAN#50	R5s100750	0424	-	Addition of GCF P3 E-UTRA EMM test case 9.2.3.1.13	8.4.0	8.5.0
2010-12	RAN#50	R5s100754	0425	-	Correction of GCF WI-081 EPC test case 9.1.2.5	8.4.0	8.5.0
2010-12	RAN#50	R5s100755	0426	-	Correction of GCF WI-081 EMM test case 9.2.3.1.5 and 9.2.3.1.8	8.4.0	8.5.0
2010-12	RAN#50	R5s100758	0434	-	Addition of GCF WI-82 P3 E-UTRA EMM test case 9.2.3.1.14	8.4.0	8.5.0
2010-12	RAN#50	R5s100760	0432	-	Correction of GCF WI-081 EPC test case 12.2.1 and 12.2.2	8.4.0	8.5.0
2010-12	RAN#50	R5s100761	0433	-	Correction of GCF WI-081 ESM test case 10.6.1, 10.4.1, 10.5.1, 10.5.3	8.4.0	8.5.0
2010-12	RAN#50	R5s100766	0431	-	Correction to GCF WI 81 EUTRA IDLE MODE test case 6.1.2.9	8.4.0	8.5.0
2010-12	RAN#50	R5s100767	0430	-	Correction to GCF WI 81 EUTRA MAC test case 7.1.4.1	8.4.0	8.5.0
2010-12	RAN#50	R5s100768	0429	-	Correction to GCF WI 82 EPC SMS test cases 11.1.3 and 11.1.4	8.4.0	8.5.0
2010-12	RAN#50	R5s100769	0428	-	Correction to GCF WI 81 EUTRA MAC test case 7.1.2.8	8.4.0	8.5.0
2010-12	RAN#50	R5s100784	0427	-	Addition of GCF WI 82 EMM test case 9.2.1.1.16	8.4.0	8.5.0
2010-12	RAN#50	R5s100787	0420	-	LTE_TDD: Addition of GCF WI 91 EUTRA RRC test case 8.1.1.6	8.4.0	8.5.0
2011-03	RAN#51	RP-110170	0436	-	CR to 36.523-3: Add new verified and e-mail agreed TTCN test cases in the TC lists in 36.523-3 (prose), Annex A	8.5.0	8.6.0

Date	TSG #	TSG Doc.	CR	Rev	Subject/Comment	Old	New
2011-03	RAN#51	R5-110803	0435	-	Routine maintenance of LTE test model and postambles	8.5.0	8.6.0
2011-03	RAN#51	R5s100751	0470	-	Addition of GCF WI-081 EUTRA RRC InterRAT test case 8.3.2.3	8.5.0	8.6.0
2011-03	RAN#51	R5s100772	0456	-	Correction to GCF WI 81 EUTRA MAC test case 7.1.4.12	8.5.0	8.6.0
2011-03	RAN#51	R5s100773	0455	-	Correction to GCF WI 82 EPC SMS test cases 11.1.1, 11.1.2, 11.1.3, 11.1.4	8.5.0	8.6.0
2011-03	RAN#51	R5s100774	0513	-	LTE_TDD: Addition of GCF WI 91 EUTRA Idle mode test case 6.1.2.15	8.5.0	8.6.0
2011-03	RAN#51	R5s100776	0512	-	LTE_TDD: Addition of GCF WI 91 EUTRA MAC test case 7.1.4.3	8.5.0	8.6.0
2011-03	RAN#51	R5s100778	0511	-	LTE_TDD: Addition of GCF WI 91 EUTRA PDCP test case 7.3.5.3	8.5.0	8.6.0
2011-03	RAN#51	R5s100780	0485	-	Addition of GCF WI 82 EMM test case 9.2.2.2.14	8.5.0	8.6.0
2011-03	RAN#51	R5s100782	0510	-	LTE_TDD: Addition of GCF WI 91 EUTRA RRC test case 8.2.1.7	8.5.0	8.6.0
2011-03	RAN#51	R5s100789	0509	-	Addition of GCF P3 E-UTRA EMM test case 9.1.2.6	8.5.0	8.6.0
2011-03	RAN#51	R5s100792	0508	-	Correction to EMM test cases 9.2.1.1.14, 9.2.3.1.2 and 10.4.1	8.5.0	8.6.0
2011-03	RAN#51	R5s100793	0507	-	Addition of GCF P3 E-UTRA EMM test case 9.2.2.1.7	8.5.0	8.6.0
2011-03	RAN#51	R5s100795	0506	-	Addition of GCF P3 E-UTRA EMM test case 9.2.3.1.9a	8.5.0	8.6.0
2011-03	RAN#51	R5s100799	0505	-	Correction of GCF WI 82 ESM test case 10.4.1	8.5.0	8.6.0
2011-03	RAN#51	R5s100800	0517	-	Correction to GCF WI-082 ESM test case 10.4.1	8.5.0	8.6.0
2011-03	RAN#51	R5s100801	0469	-	Correction to GCF WI-081 PDCP / RRC intra-LTE intercell HO test cases	8.5.0	8.6.0
2011-03	RAN#51	R5s100802	0516	-	Correction to GCF WI-081 EUTRA PDCP test case 7.3.1.3	8.5.0	8.6.0
2011-03	RAN#51	R5s100803	0502	-	Regression CR for LTE WK42 ATS	8.5.0	8.6.0
2011-03	RAN#51	R5s100811	0515	-	Addition of GCF P3 E-UTRA EMM test case 9.2.1.1.25	8.5.0	8.6.0
2011-03	RAN#51	R5s100812	0468	-	Correction to GCF WI 82 EMM test case 9.2.1.2.1	8.5.0	8.6.0
2011-03	RAN#51	R5s100813	0467	-	Correction to GCF WI 82 EMM test case 9.2.2.2.2	8.5.0	8.6.0
2011-03	RAN#51	R5s100815	0514	-	Addition of GCF P3 E-UTRA EMM test case 9.2.1.1.26	8.5.0	8.6.0
2011-03	RAN#51	R5s100817	0466	-	Addition of GCF WI 82 EMM test case 9.2.3.1.28	8.5.0	8.6.0
2011-03	RAN#51	R5s100819	0465	-	Addition of GCF WI-082 EMM test case 9.2.3.1.27	8.5.0	8.6.0
2011-03	RAN#51	R5s100821	0464	-	LTE_TDD: Addition of GCF WI 91 EUTRA MAC test case 7.1.2.4	8.5.0	8.6.0
2011-03	RAN#51	R5s100825	0463	-	LTE_TDD: Addition of GCF WI 91 EUTRA Idle mode test case 6.1.2.7	8.5.0	8.6.0
2011-03	RAN#51	R5s100827	0458	-	Addition of GCF WI 81 EUTRA RRC test case 8.1.2.2	8.5.0	8.6.0
2011-03	RAN#51	R5s100829	0457	-	LTE_TDD: Addition of GCF WI 91 EUTRA Idle Mode test case 6.1.2.9	8.5.0	8.6.0
2011-03	RAN#51	R5s100831	0462	-	LTE_TDD: Addition of GCF WI 91 EUTRA RRC test case 8.1.3.4	8.5.0	8.6.0
2011-03	RAN#51	R5s100833	0461	-	LTE_TDD: Addition of GCF WI 91 EUTRA RRC test case 8.1.3.5	8.5.0	8.6.0
2011-03	RAN#51	R5s100835	0454	-	LTE_TDD: Addition of GCF WI 91 EUTRA Idle Mode test case 6.1.1.1	8.5.0	8.6.0
2011-03	RAN#51	R5s100837	0460	-	LTE_TDD: Addition of GCF WI 91 EUTRA RRC test case 8.2.4.6	8.5.0	8.6.0
2011-03	RAN#51	R5s100839	0459	-	LTE_TDD: Addition of GCF WI 91 EUTRA DRB test case 12.2.3	8.5.0	8.6.0
2011-03	RAN#51	R5s100848	0484	-	Addition of GCF WI 81 LTE-C2K test case 8.3.2.7	8.5.0	8.6.0
2011-03	RAN#51	R5s100850	0478	-	Addition of GCF WI 81 RRC test case 8.3.3.1	8.5.0	8.6.0
2011-03	RAN#51	R5s100852	0453	-	Addition of GCF WI 81 EUTRA MAC test case 7.1.3.9	8.5.0	8.6.0
2011-03	RAN#51	R5s100854	0452	-	Addition of GCF WI 82 Multilayer test case 13.4.1.2	8.5.0	8.6.0

Date	TSG #	TSG Doc.	CR	Rev	Subject/Comment	Old	New
2011-03	RAN#51	R5s100856	0437	-	Addition of GCF WI-82 EMM test case 9.2.3.1.23	8.5.0	8.6.0
2011-03	RAN#51	R5s100858	0451	-	Addition of GCF WI-82 EMM test case 9.2.3.1.19	8.5.0	8.6.0
2011-03	RAN#51	R5s100860	0450	-	Correction to GCF WI 82 EMM test cases 9.2.1.1.21 and 9.2.1.1.22	8.5.0	8.6.0
2011-03	RAN#51	R5s100863	0449	-	LTE_TDD: Addition of GCF WI 91 EUTRA MAC test case 7.1.4.12	8.5.0	8.6.0
2011-03	RAN#51	R5s100865	0448	-	LTE_TDD: Addition of GCF WI 91 EUTRA RRC test case 8.1.2.2	8.5.0	8.6.0
2011-03	RAN#51	R5s100867	0447	-	LTE_TDD: Addition of GCF WI 92 Multilayer test case 13.3.1.1	8.5.0	8.6.0
2011-03	RAN#51	R5s100869	0446	-	LTE_TDD: Addition of GCF WI 92 Multilayer test case 13.4.1.2	8.5.0	8.6.0
2011-03	RAN#51	R5s100871	0473	-	Addition of GCF WI 81 EUTRA RRC test case 8.1.3.6	8.5.0	8.6.0
2011-03	RAN#51	R5s100873	0474	-	Addition of GCF WI 81 EUTRA Idlemode test case 6.2.3.5	8.5.0	8.6.0
2011-03	RAN#51	R5s100876	0445	-	Correction to GCF WI 82 EMM test case 9.2.3.1.14	8.5.0	8.6.0
2011-03	RAN#51	R5s100877	0444	-	Addition of GCF WI 82 EMM test case 9.2.2.1.8	8.5.0	8.6.0
2011-03	RAN#51	R5s100879	0477	-	Addition of GCF WI 81 EUTRA test case 8.3.1.11	8.5.0	8.6.0
2011-03	RAN#51	R5s100881	0443	-	LTE_TDD: Addition of GCF WI 91 EUTRA MAC test case 7.1.3.9	8.5.0	8.6.0
2011-03	RAN#51	R5s100883	0476	-	Addition of GCF WI 82 EMM test case 9.2.2.1.9	8.5.0	8.6.0
2011-03	RAN#51	R5s110001	0442	-	Correction to GCF WI 81 EUTRA RRC test case 8.1.2.3	8.5.0	8.6.0
2011-03	RAN#51	R5s110002	0440	-	Correction to GCF WI 82 ESM test case 10.8.2	8.5.0	8.6.0
2011-03	RAN#51	R5s110003	0441	-	LTE_TDD: Addition of GCF WI 91 EUTRA RRC test case 8.1.2.3	8.5.0	8.6.0
2011-03	RAN#51	R5s110005	0439	-	Correction to GCF WI 81 EUTRA RRC test case 8.3.1.7	8.5.0	8.6.0
2011-03	RAN#51	R5s110006	0438	-	Correction to GCF WI 82 EMM test case 9.1.2.6	8.5.0	8.6.0
2011-03	RAN#51	R5s110007	0475	-	Correction to EMM test cases	8.5.0	8.6.0
2011-03	RAN#51	R5s110008	0472	-	Regression CR for iwd-EUTRA-B2009-12_D10wk49 ATS	8.5.0	8.6.0
2011-03	RAN#51	R5s110009	0471	-	LTE_TDD: Addition of GCF WI 91 EUTRA RRC test case 8.5.1.2	8.5.0	8.6.0
2011-03	RAN#51	R5s110011	0483	-	Correction to GCF WI-082 ESM test cases 10.4.1 and 10.5.1 ((IP address assignment for second PDN)	8.5.0	8.6.0
2011-03	RAN#51	R5s110012	0482	-	Correction to GCF WI-081 MAC test case 7.2.3.10	8.5.0	8.6.0
2011-03	RAN#51	R5s110013	0481	-	Correction to GCF WI-081 EUTRA MAC test cases 7.1.7.x	8.5.0	8.6.0
2011-03	RAN#51	R5s110014	0480	-	Addition of GCF WI-081 EUTRA Idle Mode test case 6.2.2.1	8.5.0	8.6.0
2011-03	RAN#51	R5s110016	0479	-	Correction of RV values used in Dci1C scheduling for SI (BCCH)	8.5.0	8.6.0
2011-03	RAN#51	R5s110019	0492	-	Regression CR for LTE WK49 ATS	8.5.0	8.6.0
2011-03	RAN#51	R5s110020	0493	-	Addition of GCF WI 81 EUTRA test case 8.3.1.4	8.5.0	8.6.0
2011-03	RAN#51	R5s110024	0490	-	Addition of GCF WI 82 EMM test case 9.2.3.1.16	8.5.0	8.6.0
2011-03	RAN#51	R5s110026	0491	-	Addition of GCF WI 82 EMM test case 9.2.1.1.24	8.5.0	8.6.0
2011-03	RAN#51	R5s110028	0489	-	Addition of GCF WI 82 EMM test case 9.2.3.1.25	8.5.0	8.6.0
2011-03	RAN#51	R5s110030	0488	-	Correction to GCF WI 81 EUTRA RLC test case 7.2.3.21	8.5.0	8.6.0
2011-03	RAN#51	R5s110031	0501	-	Addition of GCF WI 81 EUTRA Idle Mode test case 6.2.3.3	8.5.0	8.6.0
2011-03	RAN#51	R5s110033	0487	-	Correction to GCF WI 81 EUTRA PDCP test case 7.3.5.2	8.5.0	8.6.0
2011-03	RAN#51	R5s110034	0486	-	Correction to use of DCI combination 1 (5 MHz) with 9 PRBs	8.5.0	8.6.0
2011-03	RAN#51	R5s110035	0499	-	Correction of NAS type definition in TS 36.523-3	8.5.0	8.6.0

Date	TSG #	TSG Doc.	CR	Rev	Subject/Comment	Old	New
2011-03	RAN#51	R5s110036	0498	-	Correction to GCF WI 81 EUTRA MAC test case 7.1.4.6	8.5.0	8.6.0
2011-03	RAN#51	R5s110037	0497	-	Correction to GCF WI 81 EUTRA RRC test case 8.3.2.3	8.5.0	8.6.0
2011-03	RAN#51	R5s110038	0496	-	Addition of GCF WI 82 EMM test case 9.3.2.2	8.5.0	8.6.0
2011-03	RAN#51	R5s110040	0495	-	Addition of GCF WI 82 EMM test case 9.3.2.2a	8.5.0	8.6.0
2011-03	RAN#51	R5s110042	0494	-	Addition of GCF WI 81 EUTRA IDLE MODE test case 6.1.2.13	8.5.0	8.6.0
2011-03	RAN#51	R5s110046	0500	-	Correction of TTCN for EMM inter-RAT / inter-frequency test cases	8.5.0	8.6.0
2011-03	RAN#51	R5s110051	0504	-	Correction to GCF WI-082 E-UTRA test case 13.3.1.1	8.5.0	8.6.0
2011-03	RAN#51	R5s110052	0520	-	Correction to GCF WI-082 E-UTRA test case 9.2.3.1.8	8.5.0	8.6.0
2011-03	RAN#51	R5s110054	0519	-	Correction to GCF WI-082 E-UTRA ESM test cases 10.8.1 and 10.8.3	8.5.0	8.6.0
2011-03	RAN#51	R5s110055	0518	-	Correction to GCF WI-082 E-UTRA ESM test case 10.4.1	8.5.0	8.6.0
2011-03	RAN#51	R5s110057	0503	-	Correction to GCF WI-081 MAC test case 7.1.2.6	8.5.0	8.6.0
2011-03	RAN#51	R5s110060	0523	-	Correction to GCF WI-081 E-UTRA MAC Testcase 7.1.2.9	8.5.0	8.6.0
2011-03	RAN#51	R5s110061	0521	-	Correction to GCF WI 81 EUTRA Idle Mode test case 6.2.3.3	8.5.0	8.6.0
2011-03	RAN#51	R5s110062	0522	-	Correction to GCF WI 81 EUTRA Idle Mode test case 6.2.3.5	8.5.0	8.6.0
2011-03	RAN#51	R5s110064	0525	-	Correction to GCF WI 82 SMS test cases	8.5.0	8.6.0
2011-03	RAN#51	R5s110068	0529	-	Addition of GCF WI 82 EMM test case 9.2.3.1.26	8.5.0	8.6.0
2011-03	RAN#51	R5s110070	0528	-	Correction to GCF WI 82 EMM test case 9.2.1.1.24	8.5.0	8.6.0
2011-03	RAN#51	R5s110073	0527	-	Addition of GCF WI 81 RRC test case 8.2.4.9	8.5.0	8.6.0
2011-03	RAN#51	R5s110075	0526	-	Addition of GCF WI 82 EMM test case 9.2.2.1.3	8.5.0	8.6.0
2011-03	RAN#51	R5s110077	0524	-	Correction to GCF WI-081 MAC test case 7.1.4.4	8.5.0	8.6.0
2011-03	RAN#51	R5s110078	0533	-	Correction to GCF WI-082 NAS common module	8.5.0	8.6.0
2011-03	RAN#51	R5s110084	0531	-	Correction to GCF WI-082 E-UTRA EMM Testcase 9.2.2.1.9	8.5.0	8.6.0
2011-03	RAN#51	R5s110085	0530	-	Correction to GCF WI-081 E-UTRA MAC Testcase 7.1.4.13	8.5.0	8.6.0
2011-03	RAN#51	R5s110086	0532	-	Correction to GCF WI 82 ESM test case 10.4.1	8.5.0	8.6.0
2011-06	RAN#52	RP-110656	0536	-	CR to 36.523-3: Add new verified and e-mail agreed TTCN test cases in the TC lists in 36.523-3 (prose), Annex A	8.6.0	9.0.0
2011-06	RAN#52	R5-112665	0535	-	Routine maintenance of LTE test model and postambles	8.6.0	9.0.0
2011-06	RAN#52	R5s110081	0564	-	Addition of GCF WI-081 EUTRA RRC InterRAT test case 8.1.3.8	8.6.0	9.0.0
2011-06	RAN#52	R5s110087	0582	-	Addition of GCF WI 81 EUTRA idle mode test case 6.2.2.2	8.6.0	9.0.0
2011-06	RAN#52	R5s110089	0545	-	Addition of GCF WI 81 RRC test case 8.1.1.4	8.6.0	9.0.0
2011-06	RAN#52	R5s110091	0544	-	Correction to GCF WI-082 test case 11.1.3 and 11.1.4	8.6.0	9.0.0
2011-06	RAN#52	R5s110092	0543	-	Correction to GCF WI-081 EUTRA PDCP test cases 7.3.4.1 and 7.3.4.2	8.6.0	9.0.0
2011-06	RAN#52	R5s110094	0542	-	Resubmission of GCF WI 82 EMM test case 9.2.1.2.10	8.6.0	9.0.0
2011-06	RAN#52	R5s110096	0541	-	Correction to EUTRA MAC test case 7.1.4.3	8.6.0	9.0.0
2011-06	RAN#52	R5s110097	0540	-	Correction to EUTRA MAC test case 7.1.2.6	8.6.0	9.0.0
2011-06	RAN#52	R5s110098	0539	-	Correction to EUTRA RRC test case 8.2.4.7	8.6.0	9.0.0
2011-06	RAN#52	R5s110099	0538	-	Addition of GCF WI 82 EUTRA EMM test case 9.3.1.15	8.6.0	9.0.0
2011-06	RAN#52	R5s110101	0537	-	Correction to GCF WI 82 ESM test cases 10.7.2 & 10.8.1	8.6.0	9.0.0

Date	TSG #	TSG Doc.	CR	Rev	Subject/Comment	Old	New
2011-06	RAN#52	R5s110109	0563	-	Addition of GCF WI 82 EUTRA EMM test case 9.3.1.3	8.6.0	9.0.0
2011-06	RAN#52	R5s110112	0562	-	Correction to GCF WI-081 EUTRA <> UTRAN test cases 8.3.2.3, 8.1.3.6, 6.2.3.3, 6.2.3.5.	8.6.0	9.0.0
2011-06	RAN#52	R5s110114	0561	-	Correction to GCF WI-082 EMM test case 9.2.3.1.23	8.6.0	9.0.0
2011-06	RAN#52	R5s110115	0560	-	Correction to GCF WI-081 E-UTRA MAC test case 7.1.2.9	8.6.0	9.0.0
2011-06	RAN#52	R5s110116	0559	-	Correction to GCF WI-082 E-UTRA EMM test case 9.2.1.1.24	8.6.0	9.0.0
2011-06	RAN#52	R5s110117	0558	-	Correction to GCF WI-081 PDCP test cases 7.3.4.1 and 7.3.4.2	8.6.0	9.0.0
2011-06	RAN#52	R5s110118	0557	-	Correction to EMM test cases 9.2.1.1.1 and 9.2.1.1.20	8.6.0	9.0.0
2011-06	RAN#52	R5s110120	0555	-	Correction to GCF WI-081 EUTRA MAC test case 7.1.4.11	8.6.0	9.0.0
2011-06	RAN#52	R5s110121	0556	-	Correction to GCF WI-081 EUTRA PDCP test case 7.3.5.2	8.6.0	9.0.0
2011-06	RAN#52	R5s110122	0554	-	Correction to previously accepted R5s110034 ((DCI combi 1 / 5 MHz / with 9 PRBs)	8.6.0	9.0.0
2011-06	RAN#52	R5s110123	0586	-	Addition of GCF WI 81 EUTRA RRC test case 8.5.2.1	8.6.0	9.0.0
2011-06	RAN#52	R5s110125	0553	-	Correction EUTRA and EMM test cases	8.6.0	9.0.0
2011-06	RAN#52	R5s110127	0552	-	Addition of GCF WI 81 EUTRA idle mode test case 6.2.3.6	8.6.0	9.0.0
2011-06	RAN#52	R5s110129	0551	-	Addition of GCF WI 82 EMM test case 9.2.1.2.2	8.6.0	9.0.0
2011-06	RAN#52	R5s110131	0550	-	Addition of GCF WI 82 EMM test case 9.2.1.2.11	8.6.0	9.0.0
2011-06	RAN#52	R5s110133	0548	-	Addition of GCF WI 82 EMM test case 9.2.3.1.10	8.6.0	9.0.0
2011-06	RAN#52	R5s110135	0547	-	Addition of GCF WI 82 EMM test case 9.2.3.1.11	8.6.0	9.0.0
2011-06	RAN#52	R5s110137	0546	-	Addition of GCF WI 82 EMM test case 9.2.3.1.12	8.6.0	9.0.0
2011-06	RAN#52	R5s110139	0549	-	Correction to EMM test cases	8.6.0	9.0.0
2011-06	RAN#52	R5s110140	0579	-	Addition of GCF WI 82 EMM test case 9.2.3.1.15	8.6.0	9.0.0
2011-06	RAN#52	R5s110142	0581	-	Correction to GCF WI-082 EMM test case 9.1.3.1	8.6.0	9.0.0
2011-06	RAN#52	R5s110143	0578	-	Addition of GCF WI 82 EUTRA EMM test case 9.2.1.2.3	8.6.0	9.0.0
2011-06	RAN#52	R5s110145	0577	-	Addition of GCF WI 82 EUTRA EMM test case 9.2.3.2.3	8.6.0	9.0.0
2011-06	RAN#52	R5s110147	0580	-	Correction to GCF WI-081 EUTRA MAC test case 7.1.4.4	8.6.0	9.0.0
2011-06	RAN#52	R5s110149	0575	-	Correction to EUTRA SS security configuration steps	8.6.0	9.0.0
2011-06	RAN#52	R5s110150	0576	-	Correction to EMM test case 9.2.3.1.14	8.6.0	9.0.0
2011-06	RAN#52	R5s110151	0574	-	Addition of GCF WI 82 EMM test case 9.2.1.1.12	8.6.0	9.0.0
2011-06	RAN#52	R5s110153	0573	-	Correction to GCF WI-081 IDLE MODE test case 6.1.1.1	8.6.0	9.0.0
2011-06	RAN#52	R5s110154	0571	-	Correction to EUTRA_AspCommon_Templates.ttcn	8.6.0	9.0.0
2011-06	RAN#52	R5s110155	0572	-	Addition of GCF WI 82 EMM test case 9.2.3.3.6	8.6.0	9.0.0
2011-06	RAN#52	R5s110157	0570	-	Correction to EMM test case 9.2.1.1.26	8.6.0	9.0.0
2011-06	RAN#52	R5s110158	0569	-	Addition of GCF WI 82 EMM test case 9.2.1.2.13	8.6.0	9.0.0
2011-06	RAN#52	R5s110160	0568	-	LTE_TDD: Addition of GCF WI 91 EUTRA Idle mode test case 6.1.2.13	8.6.0	9.0.0
2011-06	RAN#52	R5s110162	0567	-	LTE_TDD: Addition of GCF WI 91 EUTRA RRC test case 8.3.1.10	8.6.0	9.0.0
2011-06	RAN#52	R5s110164	0566	-	LTE_TDD: Addition of GCF WI 92 EUTRA Multi-Layer test case 13.3.1.2	8.6.0	9.0.0
2011-06	RAN#52	R5s110166	0565	-	Addition of GCF WI 81 EUTRA Idle mode test case 6.3.6	8.6.0	9.0.0
2011-06	RAN#52	R5s110168	0620	-	Regression CR for LTE wk11 ATS	8.6.0	9.0.0

Date	TSG #	TSG Doc.	CR	Rev	Subject/Comment	Old	New
2011-06	RAN#52	R5s110170	0585	-	Correction to EMM test case 9.2.3.1.4	8.6.0	9.0.0
2011-06	RAN#52	R5s110171	0618	-	Regression CR for LTE wk11 ATS	8.6.0	9.0.0
2011-06	RAN#52	R5s110172	0584	-	Correction to EMM test case 9.2.3.1.5	8.6.0	9.0.0
2011-06	RAN#52	R5s110173	0619	-	Correction to EUTRA MAC test cases 7.1.6.1 and 7.1.6.2	8.6.0	9.0.0
2011-06	RAN#52	R5s110174	0583	-	Correction to the use of Grant Allocation Type 2 in LTE wk11 ATS	8.6.0	9.0.0
2011-06	RAN#52	R5s110176	0615	-	Baseline upgrade of E-UTRA ATS to March-11 in Rel-9	8.6.0	9.0.0
2011-06	RAN#52	R5s110177	0608	-	Addition of GCF WI 82 EMM test case 9.3.1.4	8.6.0	9.0.0
2011-06	RAN#52	R5s110179	0607	-	Addition of GCF WI 82 EMM test case 9.3.1.5	8.6.0	9.0.0
2011-06	RAN#52	R5s110181	0606	-	LTE_TDD: Addition of GCF WI 91 EUTRA PDCP test case 7.3.5.2	8.6.0	9.0.0
2011-06	RAN#52	R5s110183	0605	-	LTE_TDD: Addition of GCF WI 91 EUTRA RRC test case 8.1.2.7	8.6.0	9.0.0
2011-06	RAN#52	R5s110185	0604	-	LTE_TDD: Addition of GCF WI 91 EUTRA RRC test case 8.2.4.7	8.6.0	9.0.0
2011-06	RAN#52	R5s110187	0603	-	Addition of GCF WI 82 EMM test case 9.2.1.2.5	8.6.0	9.0.0
2011-06	RAN#52	R5s110189	0602	-	Addition of GCF WI 82 EMM test case 9.2.1.2.7	8.6.0	9.0.0
2011-06	RAN#52	R5s110192	0601	-	Addition of GCF WI 82 EMM test case 9.2.1.2.6	8.6.0	9.0.0
2011-06	RAN#52	R5s110194	0598	-	Addition of GCF WI 82 EMM test case 9.2.1.2.8	8.6.0	9.0.0
2011-06	RAN#52	R5s110196	0600	-	Correction to EUTRA RRC test case 8.2.4.7	8.6.0	9.0.0
2011-06	RAN#52	R5s110197	0599	-	LTE_TDD: Addition of GCF WI 91 EUTRA RRC test case 8.1.1.2	8.6.0	9.0.0
2011-06	RAN#52	R5s110199	0626	-	Addition of GCF WI 82 EMM test case 9.2.1.2.15	8.6.0	9.0.0
2011-06	RAN#52	R5s110201	0596	-	Correction to EUTRA test cases 7.1.3.9, 7.2.3.6, 7.2.3.18	8.6.0	9.0.0
2011-06	RAN#52	R5s110202	0597	-	Addition of GCF WI 82 EMM test case 9.2.3.2.9	8.6.0	9.0.0
2011-06	RAN#52	R5s110204	0595	-	Addition of GCF WI 82 EMM test case 9.2.1.2.9	8.6.0	9.0.0
2011-06	RAN#52	R5s110206	0594	-	Correction to EMM SMS test cases 11.1.3 and 11.1.4	8.6.0	9.0.0
2011-06	RAN#52	R5s110207	0593	-	Correction of GCF WI 81 RLC test case 7.2.2.11	8.6.0	9.0.0
2011-06	RAN#52	R5s110208	0591	-	Correction to ESM test case 10.7.3	8.6.0	9.0.0
2011-06	RAN#52	R5s110209	0590	-	Correction to EMM test cases 9.2.1.2.1 and 9.2.2.2.2	8.6.0	9.0.0
2011-06	RAN#52	R5s110210	0592	-	Addition of GCF WI 81 EUTRA Idle Mode test case 6.2.3.4	8.6.0	9.0.0
2011-06	RAN#52	R5s110212	0589	-	Correction to EMM test case 9.1.2.6	8.6.0	9.0.0
2011-06	RAN#52	R5s110213	0588	-	Correction to TFT templates	8.6.0	9.0.0
2011-06	RAN#52	R5s110214	0587	-	Correction to EMM test case 9.2.1.1.1a	8.6.0	9.0.0
2011-06	RAN#52	R5s110215	0611	-	Corrections to LTE / WCDMA InterRAT test cases	8.6.0	9.0.0
2011-06	RAN#52	R5s110216	0624	-	Addition of GCF WI-081 EUTRA RRC test case 8.4.1.2	8.6.0	9.0.0
2011-06	RAN#52	R5s110218	0610	-	Correction to GCF WI-082 EMM test case 9.1.3.2	8.6.0	9.0.0
2011-06	RAN#52	R5s110219	0609	-	Correction to EUTRA and EMM test cases	8.6.0	9.0.0
2011-06	RAN#52	R5s110222	0617	-	Corrections to GCF WI-081 RLC test case 7.2.3.6	8.6.0	9.0.0
2011-06	RAN#52	R5s110223	0616	-	Correction of GCF WI81 MAC test case 7.1.2.9	8.6.0	9.0.0
2011-06	RAN#52	R5s110226	0614	-	Correction to EUTRA MAC test case 7.1.4.3	8.6.0	9.0.0
2011-06	RAN#52	R5s110227	0613	-	Correction to EMM test case 9.2.2.1.2	8.6.0	9.0.0

Date	TSG #	TSG Doc.	CR	Rev	Subject/Comment	Old	New
2011-06	RAN#52	R5s110228	0612	-	Correction to EMM test cases 9.4.1, 9.4.2, 9.4.3, 9.4.4	8.6.0	9.0.0
2011-06	RAN#52	R5s110230	0623	-	Correction to GCF WI-082 EMM test cases 9.3.1.7 and 9.3.1.7a	8.6.0	9.0.0
2011-06	RAN#52	R5s110232	0622	-	Correction to EMM MRAT test cases	8.6.0	9.0.0
2011-06	RAN#52	R5s110233	0621	-	Correction of type record VoiceDomainPref	8.6.0	9.0.0
2011-06	RAN#52	R5s110234	0625	-	Correction to EMM test case 9.2.1.1.19	8.6.0	9.0.0
2011-06	RAN#52	R5s110235	0630	-	Correction of UL EARFCN for FDD Band 19	8.6.0	9.0.0
2011-06	RAN#52	R5s110236	0629	-	Addition of GCF WI 81 EUTRA MAC test case 7.1.5.2	8.6.0	9.0.0
2011-06	RAN#52	R5s110238	0628	-	Addition of GCF WI 81 EUTRA MAC test case 7.1.5.4	8.6.0	9.0.0
2011-06	RAN#52	R5s110242	0627	-	Correction to LTE ATS	8.6.0	9.0.0
2011-06	RAN#52	R5s110243	0631	-	Correction to GCF WI-081 MAC test case 7.2.3.10	8.6.0	9.0.0
2011-06	RAN#52	R5s110244	0632	-	Correction to EUTRA/EMM test cases	8.6.0	9.0.0
2011-06	-	-	-	-	Correction in history table: removal of R5-112253.	9.0.0	9.0.1
2011-09	RAN#53	RP-111161	0634	-	CR to 36.523-3: Add new verified and e-mail agreed TTCN test cases in the TC lists in 36.523-3 (prose), Annex A	9.0.1	9.1.0
2011-09	RAN#53	R5-113734	0633	-	Routine maintenance and updates	9.0.1	9.1.0
2011-09	RAN#53	R5s110245	0642	-	Addition of GCF WI 81 EUTRA RRC test case 8.1.2.8	9.0.1	9.1.0
2011-09	RAN#53	R5s110247	0643	-	Addition of GCF WI 81 EUTRA RRC test case 8.1.2.6	9.0.1	9.1.0
2011-09	RAN#53	R5s110249	0644	-	Addition of GCF WI 81 EUTRA RRC test case 8.5.1.4	9.0.1	9.1.0
2011-09	RAN#53	R5s110251	0646	-	Addition of GCF WI 82 EMM test case 9.2.3.2.15	9.0.1	9.1.0
2011-09	RAN#53	R5s110253	0650	-	Addition of GCF WI 82 EMM test case 9.2.3.2.5	9.0.1	9.1.0
2011-09	RAN#53	R5s110255	0649	-	Addition of GCF WI 82 EMM test case 9.2.3.2.6	9.0.1	9.1.0
2011-09	RAN#53	R5s110257	0648	-	Addition of GCF WI 82 EMM test case 9.2.3.2.7	9.0.1	9.1.0
2011-09	RAN#53	R5s110259	0645	-	Addition of GCF WI 82 EMM test case 9.2.3.2.10	9.0.1	9.1.0
2011-09	RAN#53	R5s110261	0647	-	Addition of GCF WI 82 EMM test case 9.2.3.2.12	9.0.1	9.1.0
2011-09	RAN#53	R5s110263	0640	-	Addition of GCF WI 81 EUTRA RRC test case 8.1.1.3	9.0.1	9.1.0
2011-09	RAN#53	R5s110265	0641	-	Addition of GCF WI 82 EMM test case 9.2.3.2.8	9.0.1	9.1.0
2011-09	RAN#53	R5s110267	0672	-	Addition of GCF WI 82 EMM test case 9.2.3.2.4	9.0.1	9.1.0
2011-09	RAN#53	R5s110269	0639	-	Addition of GCF WI 86 EUTRA EMM test case 9.2.3.2.11	9.0.1	9.1.0
2011-09	RAN#53	R5s110271	0671	-	Addition of GCF WI 82 EMM test case 9.2.3.2.2	9.0.1	9.1.0
2011-09	RAN#53	R5s110273	0638	-	Addition of GCF WI 81 EUTRA RRC test case 8.2.4.8	9.0.1	9.1.0
2011-09	RAN#53	R5s110275	0637	-	Correction to the ESM test case 10.4.1	9.0.1	9.1.0
2011-09	RAN#53	R5s110276	0636	-	Addition of GCF WI 81 EUTRA Idle mode test case 6.2.2.6	9.0.1	9.1.0
2011-09	RAN#53	R5s110278	0670	-	Miscellaneous corrections to inter-RAT LTE-UTRAN ATS	9.0.1	9.1.0
2011-09	RAN#53	R5s110279	0669	-	Regression CR for LTE wk15 ATS	9.0.1	9.1.0
2011-09	RAN#53	R5s110282	0635	-	Correction of GCF WI 81 EUTRA EMM test case 9.2.3.1.25	9.0.1	9.1.0
2011-09	RAN#53	R5s110285	0668	-	Addition of GCF WI 81 EUTRA RRC test case 8.1.2.13	9.0.1	9.1.0
2011-09	RAN#53	R5s110287	0667	-	Addition of GCF WI 81 EUTRA RRC test case 8.1.2.9	9.0.1	9.1.0
2011-09	RAN#53	R5s110289	0666	-	Addition of GCF WI 82 ESM test case 10.8.5	9.0.1	9.1.0

Date	TSG #	TSG Doc.	CR	Rev	Subject/Comment	Old	New
2011-09	RAN#53	R5s110291	0665	-	Addition of GCF WI-081 E-UTRA Idle Mode test case 6.1.2.10	9.0.1	9.1.0
2011-09	RAN#53	R5s110293	0664	-	Addition of GCF WI-082 E-UTRA ESM testcase 10.7.5	9.0.1	9.1.0
2011-09	RAN#53	R5s110295	0658	-	Correction to EUTRA_ConfigurationSteps	9.0.1	9.1.0
2011-09	RAN#53	R5s110296	0657	-	Correction to EUTRA_Timing	9.0.1	9.1.0
2011-09	RAN#53	R5s110297	0656	-	Correction to EUTRA MAC test cases 7.1.6.x	9.0.1	9.1.0
2011-09	RAN#53	R5s110298	0663	-	LTE_TDD: Addition of GCF WI 91 EUTRA RRC test case 8.1.2.6	9.0.1	9.1.0
2011-09	RAN#53	R5s110300	0662	-	LTE_TDD: Addition of GCF WI 91 EUTRA RRC test case 8.1.2.13	9.0.1	9.1.0
2011-09	RAN#53	R5s110302	0661	-	LTE_TDD :Addition of GCF WI 91 EUTRA RRC test case 8.5.1.4	9.0.1	9.1.0
2011-09	RAN#53	R5s110303	0655	-	Correction to EUTRA PDCP test case 7.3.5.3	9.0.1	9.1.0
2011-09	RAN#53	R5s110306	0660	-	Correction to EUTRA Paging procedure	9.0.1	9.1.0
2011-09	RAN#53	R5s110307	0654	-	Correction to EMM test cases 9.2.1.1.1a, 9.2.2.1.1, 9.2.2.1.8, 9.2.3.2.11 and 9.3.1.16	9.0.1	9.1.0
2011-09	RAN#53	R5s110308	0653	-	Correction to EMM test cases 9.2.3.1.15 and 9.2.3.1.18	9.0.1	9.1.0
2011-09	RAN#53	R5s110309	0652	-	Improving LTE/SAE test cases by indicating the need for special Test USIM settings	9.0.1	9.1.0
2011-09	RAN#53	R5s110310	0678	-	Correction to EUTRA RRC test case 8.5.1.2	9.0.1	9.1.0
2011-09	RAN#53	R5s110311	0659	-	Addition of GCF WI-082 E-UTRA ESM testcase 10.8.6	9.0.1	9.1.0
2011-09	RAN#53	R5s110313	0651	-	Correction to GCF WI-082 ESM test cases 10.2.1. and 10.4.1	9.0.1	9.1.0
2011-09	RAN#53	R5s110314	0676	-	Modification of f_EUTRA_CellInfo_GetAntennaInfoCommon	9.0.1	9.1.0
2011-09	RAN#53	R5s110315	0677	-	Correction to EUTRA Idle Mode test case 6.2.3.4	9.0.1	9.1.0
2011-09	RAN#53	R5s110317	0675	-	Correction to EMM test case 9.2.3.1.16	9.0.1	9.1.0
2011-09	RAN#53	R5s110318	0681	-	Regression CR for LTE wk23 ATS	9.0.1	9.1.0
2011-09	RAN#53	R5s110319	0674	-	Correction to EUTRA test case 6.1.2.6	9.0.1	9.1.0
2011-09	RAN#53	R5s110320	0673	-	Addition of GCF WI 81 EUTRA DRB test case 12.3.1	9.0.1	9.1.0
2011-09	RAN#53	R5s110322	0692	-	Correction to GCF WI 86 RRC test case 8.1.3.6	9.0.1	9.1.0
2011-09	RAN#53	R5s110323	0691	-	Addition of GCF WI-081 E-UTRA IDLE MODE testcase 6.1.2.12	9.0.1	9.1.0
2011-09	RAN#53	R5s110325	0690	-	Addition of GCF WI-081 E-UTRA IDLE MODE testcase 6.1.2.14	9.0.1	9.1.0
2011-09	RAN#53	R5s110327	0689	-	Addition of GCF WI 81 EUTRA DRB test case 12.2.4	9.0.1	9.1.0
2011-09	RAN#53	R5s110329	0687	-	Correction to GCF WI 81 EUTRA RRC test case 8.3.1.7	9.0.1	9.1.0
2011-09	RAN#53	R5s110330	0688	-	Addition of GCF WI 81 EUTRA DRB test case 12.3.4	9.0.1	9.1.0
2011-09	RAN#53	R5s110336	0686	-	Addition of GCF WI 81 EUTRA DRB test case 12.3.2	9.0.1	9.1.0
2011-09	RAN#53	R5s110338	0685	-	Addition of GCF WI 81 EUTRA DRB test case 12.3.3	9.0.1	9.1.0
2011-09	RAN#53	R5s110340	0716	-	Regression CR for LTE wk23 ATS	9.0.1	9.1.0
2011-09	RAN#53	R5s110341	0684	-	Correction to configuration of EUTRA SIB scheduling	9.0.1	9.1.0
2011-09	RAN#53	R5s110342	0682	-	Correction to f_EUTRA_SS_SetupSchedulingInfo and f_EUTRA_IdleUpdated_Step5_14	9.0.1	9.1.0
2011-09	RAN#53	R5s110346	0683	-	Addition of GCF WI 82 EMM test case 9.2.3.2.17	9.0.1	9.1.0
2011-09	RAN#53	R5s110348	0715	-	Correction to EUTRA NAS cells initialization	9.0.1	9.1.0
2011-09	RAN#53	R5s110350	0680	-	Correction to GCF WI-081 RRC test case 8.5.4.1	9.0.1	9.1.0
2011-09	RAN#53	R5s110351	0679	-	Regression CR for LTE wk23 MRAT Testcases	9.0.1	9.1.0

Date	TSG #	TSG Doc.	CR	Rev	Subject/Comment	Old	New
2011-09	RAN#53	R5s110352	0711	-	Correction to GCF WI 81 EUTRA RRC test case 8.3.3.1	9.0.1	9.1.0
2011-09	RAN#53	R5s110353	0710	-	Correction of frequencies used for LTE Band 6, 14, 17 and 38	9.0.1	9.1.0
2011-09	RAN#53	R5s110354	0709	-	Addition of GCF WI 81 EUTRA RRC test case 8.3.1.6	9.0.1	9.1.0
2011-09	RAN#53	R5s110356	0708	-	Correction to EUTRA RRC test cases 8.2.4.1, 8.2.4.4 and 8.2.4.7	9.0.1	9.1.0
2011-09	RAN#53	R5s110357	0707	-	LTE_TDD: Addition of GCF WI 91 EUTRA RRC test case 8.3.1.6	9.0.1	9.1.0
2011-09	RAN#53	R5s110359	0706	-	Addition of GCF WI 82 EMM test case 9.2.3.1.18	9.0.1	9.1.0
2011-09	RAN#53	R5s110361	0705	-	LTE_TDD: Addition of GCF WI 91 EUTRA RRC test case 8.2.4.8	9.0.1	9.1.0
2011-09	RAN#53	R5s110363	0704	-	Correction to GCF WI 86 EMM test cases 9.2.3.2.5, 9.2.3.2.6 and 9.2.3.2.7	9.0.1	9.1.0
2011-09	RAN#53	R5s110364	0703	-	Correction of GCF WI 82 EMM test cases 9.2.1.2.5,TC 9.2.1.2.6 and TC 9.2.1.2.7	9.0.1	9.1.0
2011-09	RAN#53	R5s110365	0702	-	Correction to GCF WI-082 ESM test cases 10.2.1 and 10.4.1	9.0.1	9.1.0
2011-09	RAN#53	R5s110368	0701	-	Correction to EMM test case 9.2.1.2.11	9.0.1	9.1.0
2011-09	RAN#53	R5s110369	0700	-	Addition of GCF WI 82 EMM test case 9.2.1.1.11	9.0.1	9.1.0
2011-09	RAN#53	R5s110371	0699	-	Addition of GCF WI 81 Idle Mode test case 6.2.1.2	9.0.1	9.1.0
2011-09	RAN#53	R5s110373	0698	-	Addition of GCF WI-082 E-UTRA ESM testcase 10.8.7	9.0.1	9.1.0
2011-09	RAN#53	R5s110375	0697	-	Addition of GCF WI-082 E-UTRA ESM testcase 10.8.4	9.0.1	9.1.0
2011-09	RAN#53	R5s110377	0696	-	Addition of GCF WI-087 EUTRA Idle mode InterRAT test case 6.2.2.7	9.0.1	9.1.0
2011-09	RAN#53	R5s110382	0695	-	Correction to EUTRA RRC test case 8.4.1.2	9.0.1	9.1.0
2011-09	RAN#53	R5s110383	0694	-	Correction of EUTRA RLC test case 7.2.3.9	9.0.1	9.1.0
2011-09	RAN#53	R5s110384	0693	-	Addition of GCF WI 82 EMM test case 9.2.3.1.17	9.0.1	9.1.0
2011-09	RAN#53	R5s110386	0714	-	Correction to UTRAN common modules in LTE ATS	9.0.1	9.1.0
2011-09	RAN#53	R5s110389	0713	-	Correction to GCF WI81 RLC test case 7.2.3.17	9.0.1	9.1.0
2011-09	RAN#53	R5s110394	0712	-	Correction of RLC and MAC test cases for TDD scheduling	9.0.1	9.1.0
2011-09	RAN#53	R5s110395	0732	-	Correction to EMM test cases	9.0.1	9.1.0
2011-09	RAN#53	R5s110396	0719	-	Correction to EUTRA RRC test case 8.5.1.2	9.0.1	9.1.0
2011-09	RAN#53	R5s110397	0726	-	LTE_TDD: Addition of GCF WI 81 EUTRA test case 6.1.2.12	9.0.1	9.1.0
2011-09	RAN#53	R5s110399	0725	-	LTE_TDD: Addition of GCF WI 81 EUTRA test case 6.1.2.14	9.0.1	9.1.0
2011-09	RAN#53	R5s110401	0724	-	LTE_TDD: Addition of GCF WI 81 EUTRA RRC test case 8.1.1.3	9.0.1	9.1.0
2011-09	RAN#53	R5s110403	0723	-	LTE_TDD: Addition of GCF WI 81 EUTRA RRC test case 8.1.1.4	9.0.1	9.1.0
2011-09	RAN#53	R5s110405	0722	-	LTE_TDD: Addition of GCF WI 81 EUTRA RRC test case 8.3.1.4	9.0.1	9.1.0
2011-09	RAN#53	R5s110407	0721	-	LTE_TDD: Addition of GCF WI 81 EUTRA RRC test case 8.1.2.8	9.0.1	9.1.0
2011-09	RAN#53	R5s110409	0720	-	LTE_TDD: Addition of GCF WI 81 E-UTRA DRB test case 12.2.4	9.0.1	9.1.0
2011-09	RAN#53	R5s110411	0717	-	Correction of MAC test cases 7.1.4.15 and 7.1.4.16 for TDD scheduling	9.0.1	9.1.0
2011-09	RAN#53	R5s110412	0718	-	LTE_TDD: Addition of GCF WI-091 E-UTRA RRC testcase 8.2.4.4	9.0.1	9.1.0
2011-09	RAN#53	R5s110414	0738	-	LTE_TDD: Addition of GCF WI 91 EUTRA MAC test case 7.1.5.2	9.0.1	9.1.0
2011-09	RAN#53	R5s110416	0737	-	LTE_TDD: Addition of GCF WI 91 EUTRA MAC test case 7.1.5.4	9.0.1	9.1.0
2011-09	RAN#53	R5s110418	0794	-	Correction to GCF WI-081 EUTRA PDCP test cases 7.3.4.1 and 7.3.4.2	9.0.1	9.1.0
2011-09	RAN#53	R5s110421	0736	-	Correction to GCF WI-086 /-087 EMM test case 9.2.1.2.15	9.0.1	9.1.0

Date	TSG #	TSG Doc.	CR	Rev	Subject/Comment	Old	New
2011-09	RAN#53	R5s110422	0735	-	Correction to GCF WI-081 EUTRA MAC test case 7.1.5.x	9.0.1	9.1.0
2011-09	RAN#53	R5s110423	0734	-	Correction to GCF WI-082 EMM test case 9.2.1.2.2	9.0.1	9.1.0
2011-09	RAN#53	R5s110424	0733	-	Correction to GCF WI-082 EMM test case 9.2.3.1.26	9.0.1	9.1.0
2011-09	RAN#53	R5s110425	0731	-	Corrections required for IPv6	9.0.1	9.1.0
2011-09	RAN#53	R5s110426	0730	-	Correction to GCF WI 82 EMM test cases 9.2.3.1.9a and 9.2.3.1.23	9.0.1	9.1.0
2011-09	RAN#53	R5s110427	0729	-	Correction to EUTRA EMM test cases 9.4.1, 9.4.2, 9.4.3, 9.4.4, 9.1.3.2 and 9.2.1.1.1a	9.0.1	9.1.0
2011-09	RAN#53	R5s110428	0728	-	LTE_TDD: Addition of GCF WI 081 EUTRA Idle Mode test case 6.3.6	9.0.1	9.1.0
2011-09	RAN#53	R5s110430	0727	-	Correction to Multilayer test case 13.3.1.2	9.0.1	9.1.0
2011-09	RAN#53	R5s110431	0772	-	Correction to UTRAN Default Handling in LTE/SAE ATS	9.0.1	9.1.0
2011-09	RAN#53	R5s110432	0771	-	Correction to ESM testcase 10.7.5	9.0.1	9.1.0
2011-09	RAN#53	R5s110433	0770	-	Correction to LTE<>GERAN Testcases	9.0.1	9.1.0
2011-09	RAN#53	R5s110435	0788	-	Addition of GCF WI-086 E-UTRA RRC testcase 8.3.2.4	9.0.1	9.1.0
2011-09	RAN#53	R5s110437	0768	-	LTE_TDD: Addition of GCF WI-091 E-UTRA RRC testcase 8.3.1.11	9.0.1	9.1.0
2011-09	RAN#53	R5s110439	0769	-	Addition of GCF WI 82 EMM test case 9.1.5.1	9.0.1	9.1.0
2011-09	RAN#53	R5s110441	0762	-	Correction to GCF WI-081 EUTRA RRC test case 8.2.4.7	9.0.1	9.1.0
2011-09	RAN#53	R5s110443	0767	-	Correction to GCF WI 82 EMM test cases 9.3.1.4 and 9.3.1.5	9.0.1	9.1.0
2011-09	RAN#53	R5s110445	0760	-	Correction to GCF WI-085 Interband Testcase 6.1.2.5	9.0.1	9.1.0
2011-09	RAN#53	R5s110446	0765	-	Correction to GCF WI-082 EMM Testcase 9.2.3.1.4	9.0.1	9.1.0
2011-09	RAN#53	R5s110447	0764	-	Correction to GCF WI-081 RRC Testcase 8.1.3.5	9.0.1	9.1.0
2011-09	RAN#53	R5s110448	0783	-	Correction to GCF WI-082 EMM Testcases 9.2.1.2.10 and 9.2.3.1.26	9.0.1	9.1.0
2011-09	RAN#53	R5s110449	0763	-	Corrections required to support IPv6	9.0.1	9.1.0
2011-09	RAN#53	R5s110456	0766	-	Correction to GCF WI-081 EUTRA MAC test cases 7.1.3.9 and 7.1.4.12	9.0.1	9.1.0
2011-09	RAN#53	R5s110461	0761	-	Correction to constant tsc_EUTRA_DelayForCellSelection	9.0.1	9.1.0
2011-09	RAN#53	R5s110462	0759	-	Addition of GCF WI-082 EMM test case 9.2.3.3.5	9.0.1	9.1.0
2011-09	RAN#53	R5s110464	0758	-	Addition of GCF WI-081 EUTRA MAC test case 7.1.5.5	9.0.1	9.1.0
2011-09	RAN#53	R5s110465	0747	-	Correction to UTRAN PS RB Establishment	9.0.1	9.1.0
2011-09	RAN#53	R5s110466	0749	-	Corrections to UTRAN GMM Service Request	9.0.1	9.1.0
2011-09	RAN#53	R5s110468	0756	-	Correction to the Idle Mode test case 6.1.2.10	9.0.1	9.1.0
2011-09	RAN#53	R5s110469	0757	-	Addition of GCF WI-081 EUTRA RRC test case 8.2.1.6	9.0.1	9.1.0
2011-09	RAN#53	R5s110472	0755	-	Correction of EMM test cases 9.2.3.2.11, 9.2.1.1.13	9.0.1	9.1.0
2011-09	RAN#53	R5s110473	0754	-	Correction to EUTRA MAC test case 7.1.3.5	9.0.1	9.1.0
2011-09	RAN#53	R5s110474	0752	-	Correction to GCF WI-091 EUTRA RLC test cases	9.0.1	9.1.0
2011-09	RAN#53	R5s110475	0751	-	Improvement to EUTRA IRAT preamble	9.0.1	9.1.0
2011-09	RAN#53	R5s110476	0753	-	Correction to EMM test case 9.3.1.17	9.0.1	9.1.0
2011-09	RAN#53	R5s110478	0750	-	Correction to EMM test case 9.2.3.1.5	9.0.1	9.1.0
2011-09	RAN#53	R5s110481	0746	-	LTE_TDD: Addition of GCF WI 91 EUTRA DRB test case 12.3.1	9.0.1	9.1.0
2011-09	RAN#53	R5s110483	0745	-	LTE_TDD: Addition of GCF WI 91 EUTRA DRB test case 12.3.2	9.0.1	9.1.0

Date	TSG #	TSG Doc.	CR	Rev	Subject/Comment	Old	New
2011-09	RAN#53	R5s110485	0744	-	LTE_TDD: Addition of GCF WI 91 EUTRA DRB test case 12.3.3	9.0.1	9.1.0
2011-09	RAN#53	R5s110487	0743	-	LTE_TDD: Addition of GCF WI 91 EUTRA DRB test case 12.3.4	9.0.1	9.1.0
2011-09	RAN#53	R5s110489	0748	-	Correction to AT command to initiate CS speech call	9.0.1	9.1.0
2011-09	RAN#53	R5s110491	0742	-	Correction of EUTRA Idle Mode test cases 6.1.2.10	9.0.1	9.1.0
2011-09	RAN#53	R5s110492	0793	-	Addition of GCF WI-088 EUTRA –HRPD InterRAT test case 8.1.3.9	9.0.1	9.1.0
2011-09	RAN#53	R5s110494	0792	-	Addition of GCF WI-088 EUTRA –HRPD InterRAT test case 6.2.2.3	9.0.1	9.1.0
2011-09	RAN#53	R5s110496	0791	-	Addition of GCF WI-088 EUTRA –HRPD InterRAT test case 6.2.3.8	9.0.1	9.1.0
2011-09	RAN#53	R5s110498	0775	-	Correction to GCF-WI-082 EMM test case 9.2.1.1.7	9.0.1	9.1.0
2011-09	RAN#53	R5s110499	0739	-	Correction to GCF WI-082 EUTRA Multi-Layer test case 13.3.1.2	9.0.1	9.1.0
2011-09	RAN#53	R5s110500	0741	-	Correction of GCF WI 82 ESM test cases 10.7.3 and 10.8.3	9.0.1	9.1.0
2011-09	RAN#53	R5s110505	0740	-	Addition of GCF WI 81 EUTRA RRC test case 8.2.4.12	9.0.1	9.1.0
2011-09	RAN#53	R5s110509	0786	-	Addition of GCF WI 81 EUTRA test case 6.1.1.2	9.0.1	9.1.0
2011-09	RAN#53	R5s110511	0785	-	Addition of GCF WI 81 EUTRA test case 6.1.1.4	9.0.1	9.1.0
2011-09	RAN#53	R5s110513	0782	-	Addition of GCF WI-081 E-UTRA MAC testcase 7.1.5.1	9.0.1	9.1.0
2011-09	RAN#53	R5s110515	0784	-	Correction to WI-086 EUTRA Idle Mode Testcase 6.2.3.4	9.0.1	9.1.0
2011-09	RAN#53	R5s110516	0781	-	Regression TTCN CR for IWD_wk27 ATS	9.0.1	9.1.0
2011-09	RAN#53	R5s110517	0780	-	Correction to GCF WI-082 ‘SMS over SGs’ test cases 11.1.x	9.0.1	9.1.0
2011-09	RAN#53	R5s110518	0779	-	Correction to GCF WI-082 EMM test case 9.2.3.1.17	9.0.1	9.1.0
2011-09	RAN#53	R5s110519	0789	-	Addition of GCF WI-086 E-UTRA Idle Mode testcase 6.2.3.13	9.0.1	9.1.0
2011-09	RAN#53	R5s110521	0774	-	Correction to GCF WI-082 EMM test case 9.2.1.2.1	9.0.1	9.1.0
2011-09	RAN#53	R5s110526	0778	-	Correction to EUTRA RLC test case 7.2.3.16	9.0.1	9.1.0
2011-09	RAN#53	R5s110527	0773	-	Correction to GCF WI-082 EMM test case 9.2.1.1.1a	9.0.1	9.1.0
2011-09	RAN#53	R5s110528	0790	-	Addition of GCF WI 81 EUTRA Test Case 6.1.1.3	9.0.1	9.1.0
2011-09	RAN#53	R5s110530	0776	-	Addition of GCF WI-081 E-UTRA RRC testcase 8.2.1.5	9.0.1	9.1.0
2011-09	RAN#53	R5s110532	0777	-	LTE_TDD: Addition of GCF WI 91 EUTRA RRC test case 8.2.4.12	9.0.1	9.1.0
2011-09	RAN#53	R5s110534	0787	-	LTE_TDD: Addition of GCF WI 91 EUTRA RRC test case 8.2.1.6	9.0.1	9.1.0
2011-09	RAN#53	R5s110546	0795	-	Correction to GCF WI-082 EMM test case 9.2.1.1.24	9.0.1	9.1.0
2011-09	RAN#53	R5s110551	0796	-	Correction to EMM test case 9.2.1.2.3	9.0.1	9.1.0
2011-09	RAN#53	R5s110552	0798	-	Correction to EUTRA MAC test case 7.1.6.1 and 7.1.6.2	9.0.1	9.1.0
2011-09	RAN#53	R5s110553	0797	-	LTE_TDD: Addition of GCF WI-091 EUTRA MAC testcase 7.1.5.1	9.0.1	9.1.0
2011-12	RAN#54	R5-115770	0799	-	Routine maintenance and updates for EUTRA test model	9.1.0	9.2.0
2011-12	RAN#54	RP-111588	0800	-	CR to 36.523-3: Add new verified and e-mail agreed TTCN test cases in the TC lists in 36.523-3 (prose), Annex A	9.1.0	9.2.0
2011-12	RAN#54	R5s110549	0801	-	Addition of GCF WI 82 EMM test case 9.3.1.6	9.1.0	9.2.0
2011-12	RAN#54	R5s110547	0802	-	Addition of GCF WI 86 EUTRA Idle Mode test case 6.2.2.5	9.1.0	9.2.0
2011-12	RAN#54	R5s110575	0803	-	Correction to GCF WI-087 Idle Mode Testcases 6.2.2.6	9.1.0	9.2.0
2011-12	RAN#54	R5s110573	0804	-	Addition of GCF WI-081 E-UTRA MAC testcase 7.1.5.3	9.1.0	9.2.0
2011-12	RAN#54	R5s110571	0805	-	Correction to EUTRA MAC test case 7.1.5.4	9.1.0	9.2.0

Date	TSG #	TSG Doc.	CR	Rev	Subject/Comment	Old	New
2011-12	RAN#54	R5s110570	0806	-	Correction to AT commands	9.1.0	9.2.0
2011-12	RAN#54	R5s110569	0807	-	Correction to GCF WI-086 EMM Testcases 9.2.1.2.11	9.1.0	9.2.0
2011-12	RAN#54	R5s110568	0808	-	Correction to GCF WI-082 EMM Testcases 9.2.3.1.17	9.1.0	9.2.0
2011-12	RAN#54	R5s110566	0809	-	Addition of GCF WI82 EMM test case 9.2.3.1.22	9.1.0	9.2.0
2011-12	RAN#54	R5s110565	0810	-	Correction to GCF WI-081 RRC test case 8.5.4.1	9.1.0	9.2.0
2011-12	RAN#54	R5s110444	0811	-	Correction to GCF WI-081 EUTRA RRC Testcase 8.2.4.7	9.1.0	9.2.0
2011-12	RAN#54	R5s110563	0812	-	Correction to GCF WI-086 EUTRA RRC Testcase 8.4.1.2	9.1.0	9.2.0
2011-12	RAN#54	R5s110561	0813	-	Addition of GCF WI 82 EMM Test Case 9.2.1.2.12	9.1.0	9.2.0
2011-12	RAN#54	R5s110560	0814	-	Correction to GCF WI-081 EUTRA RRC test case 8.2.4.7	9.1.0	9.2.0
2011-12	RAN#54	R5s110558	0815	-	Correction to GCF WI-091 EUTRA MAC test cases 7.1.4.15 + 7.1.4.16 and RLC test case 7.2.3.15	9.1.0	9.2.0
2011-12	RAN#54	R5s110556	0816	-	Addition of GCF WI 81 EUTRA Test Case 6.1.1.6	9.1.0	9.2.0
2011-12	RAN#54	R5s110559	0817	-	Correction to GCF WI-081 EUTRA RRC Testcase 8.2.4.12	9.1.0	9.2.0
2011-12	RAN#54	R5s110555	0818	-	Correction of GCF WI 91 RLC test case 7.2.3.17	9.1.0	9.2.0
2011-12	RAN#54	R5s110587	0819	-	Correction to EMM test case 9.2.1.1.20	9.1.0	9.2.0
2011-12	RAN#54	R5s110580	0820	-	Addition of GCF WI 86 Multilayer Test Case 13.1.2	9.1.0	9.2.0
2011-12	RAN#54	R5s110588	0821	-	Correction to GCF WI-086 Idle Mode Testcases 6.2.3.13	9.1.0	9.2.0
2011-12	RAN#54	R5s110584	0822	-	Correction to EMM test case 9.1.5.1	9.1.0	9.2.0
2011-12	RAN#54	R5s110585	0823	-	Addition of GCF WI-081 E-UTRA MAC testcase 7.1.7.1.6	9.1.0	9.2.0
2011-12	RAN#54	R5s110582	0824	-	Addition of GCF WI-081 E-UTRA MAC testcase 7.1.7.1.5	9.1.0	9.2.0
2011-12	RAN#54	R5s110572	0825	-	Correction of DRB test cases 12.3.1,12.3.2,12.3.3,12.3.4	9.1.0	9.2.0
2011-12	RAN#54	R5s110576	0826	-	Correction to GCF WI-081 EUTRA MAC test case 7.1.3.9	9.1.0	9.2.0
2011-12	RAN#54	R5s110598	0827	-	Addition of GCF WI-086 EUTRA RRC test case 8.3.3.2	9.1.0	9.2.0
2011-12	RAN#54	R5s110603	0828	-	Corrections to the IP component	9.1.0	9.2.0
2011-12	RAN#54	R5s110593	0829	-	Regression CR for LTE wk37 ATS	9.1.0	9.2.0
2011-12	RAN#54	R5s110604	0830	-	Addition of GCF WI-082 ESM test case 10.9.1	9.1.0	9.2.0
2011-12	RAN#54	R5s110634	0831	-	Correction to GCF WI 82 ESM test case 10.3.1	9.1.0	9.2.0
2011-12	RAN#54	R5s110633	0832	-	Correction to function f_UT_ManualPLMN_Select	9.1.0	9.2.0
2011-12	RAN#54	R5s110632	0833	-	Correction to EMM test cases	9.1.0	9.2.0
2011-12	RAN#54	R5s110631	0834	-	Correction to GCF WI-082 Idle Mode Testcases 9.3.2.2 and 9.3.2.2a	9.1.0	9.2.0
2011-12	RAN#54	R5s110623	0835	-	Correction to GCF WI-081 E-UTRA MIMO DRB Test Case Testcases 12.3.1, 12.3.2, 12.3.3 and 12.3.4	9.1.0	9.2.0
2011-12	RAN#54	R5s110610	0836	-	LTE_TDD: Addition of GCF WI-095 EUTRA RRC test case 8.2.4.9	9.1.0	9.2.0
2011-12	RAN#54	R5s110608	0837	-	LTE_TDD: Addition of GCF WI-095 EUTRA Idle Mode test case 6.1.2.5	9.1.0	9.2.0
2011-12	RAN#54	R5s110621	0838	-	LTE_TDD: Addition of GCF WI-091 EUTRA MAC testcase 7.1.5.5	9.1.0	9.2.0
2011-12	RAN#54	R5s110619	0839	-	LTE_TDD: Addition of GCF WI-091 EUTRA MAC testcase 7.1.5.3	9.1.0	9.2.0
2011-12	RAN#54	R5s110607	0840	-	Correction to GCF WI-86 EMM test case 9.2.3.3.5	9.1.0	9.2.0
2011-12	RAN#54	R5s110618	0841	-	Correction to LTE wk37 ATS	9.1.0	9.2.0
2011-12	RAN#54	R5s110616	0842	-	LTE_TDD: Addition of GCF WI-091 EUTRA Idle mode testcase 6.1.2.10	9.1.0	9.2.0

Date	TSG #	TSG Doc.	CR	Rev	Subject/Comment	Old	New
2011-12	RAN#54	R5s110614	0843	-	LTE_TDD: Addition of GCF WI-091 EUTRA MAC testcase 7.1.7.1.6	9.1.0	9.2.0
2011-12	RAN#54	R5s110612	0844	-	LTE_TDD: Addition of GCF WI-091 EUTRA MAC testcase 7.1.7.1.5	9.1.0	9.2.0
2011-12	RAN#54	R5s110596	0845	-	Regression CR for LTE IWD_wk37	9.1.0	9.2.0
2011-12	RAN#54	R5s110594	0846	-	Addition of GCF WI-082 E-UTRA EMM testcase 9.2.3.2.1a	9.1.0	9.2.0
2011-12	RAN#54	R5s110591	0847	-	LTE_TDD: Addition of GCF WI 97 EUTRA Idle mode test case 6.2.2.7	9.1.0	9.2.0
2011-12	RAN#54	R5s110589	0848	-	LTE_TDD: Addition of GCF WI 97 EUTRA RRC test case 8.1.3.8	9.1.0	9.2.0
2011-12	RAN#54	R5s110577	0849	-	Correction to EMM test case 9.2.3.2.3	9.1.0	9.2.0
2011-12	RAN#54	R5s110643	0850	-	Addition of GCF WI 82 EMM test case 9.2.2.1.4	9.1.0	9.2.0
2011-12	RAN#54	R5s110641	0851	-	Correction to EMM test case 9.2.3.1.17	9.1.0	9.2.0
2011-12	RAN#54	R5s110639	0852	-	Addition of GCF WI 81 EUTRA MAC test case 7.1.4.14	9.1.0	9.2.0
2011-12	RAN#54	R5s110637	0853	-	Addition of GCF WI 82 EMM test case 9.3.1.12a	9.1.0	9.2.0
2011-12	RAN#54	R5s110636	0854	-	Correction of GCF WI81 EUTRA Idle Mode in test case 6.1.1.3	9.1.0	9.2.0
2011-12	RAN#54	R5s110600	0855	-	Addition of GCF WI-088 EUTRA –1xRTT InterRAT test case 6.2.2.4	9.1.0	9.2.0
2011-12	RAN#54	R5s110658	0856	-	Correction to Timing Issues in Case of Big RRC + NAS Messages in EUTRA Testcases	9.1.0	9.2.0
2011-12	RAN#54	R5s110657	0857	-	Correction of GERAN Common Functions and Type Definitions in LTE / SAE ATS	9.1.0	9.2.0
2011-12	RAN#54	R5s110655	0858	-	Addition of GCF WI-086 EUTRA-UTRA Idle Mode test case 6.2.3.32	9.1.0	9.2.0
2011-12	RAN#54	R5s110653	0859	-	Addition of GCF WI-086 EUTRA-UTRA Idle Mode test case 6.2.3.31	9.1.0	9.2.0
2011-12	RAN#54	R5s110651	0860	-	Addition of GCF WI-086 EUTRA-UTRA Idle Mode test case 6.2.2.8	9.1.0	9.2.0
2011-12	RAN#54	R5s110649	0861	-	Addition of GCF WI-086 E-UTRA EMM testcase 9.2.3.2.14	9.1.0	9.2.0
2011-12	RAN#54	R5s110647	0862	-	Addition of GCF WI-086 E-UTRA EMM testcase 9.2.2.1.10	9.1.0	9.2.0
2011-12	RAN#54	R5s110666	0863	-	Correction to GCF WI-081 EUTRA MAC Testcase 7.1.4.14	9.1.0	9.2.0
2011-12	RAN#54	R5s110602	0864	-	Removal of SRB0 from SS SRB / DRB handling functions	9.1.0	9.2.0
2011-12	RAN#54	R5s110659	0865	-	Correction to GCF WI-081 EUTRA RAB test cases 12.3.x	9.1.0	9.2.0
2011-12	RAN#54	R5s110682	0866	-	Correction to Type Def. in LTE/SAE ATS	9.1.0	9.2.0
2011-12	RAN#54	R5s110680	0867	-	LTE_TDD: Addition of GCF WI-091 EUTRA Idle mode testcase 6.1.1.3	9.1.0	9.2.0
2011-12	RAN#54	R5s110678	0868	-	LTE_TDD: Addition of GCF WI-091 EUTRA Idle mode testcase 6.1.1.4	9.1.0	9.2.0
2011-12	RAN#54	R5s110676	0869	-	LTE_TDD: Addition of GCF WI-091 EUTRA Idle mode testcase 6.1.1.2	9.1.0	9.2.0
2011-12	RAN#54	R5s110675	0870	-	Corrections to GCF WI82 ESM test case 10.5.3	9.1.0	9.2.0
2011-12	RAN#54	R5s110674	0871	-	Correction to GCF WI-081 EUTRA RRC Testcase 8.1.2.13	9.1.0	9.2.0
2011-12	RAN#54	R5s110673	0872	-	Corrections to GCF WI82 ESM test case 10.3.1	9.1.0	9.2.0
2011-12	RAN#54	R5s110645	0873	-	Corrections to GCF WI82 ESM test case 10.9.1	9.1.0	9.2.0
2011-12	RAN#54	R5s110646	0874	-	Correction to GCF WI81 Idle Mode test case 6.1.2.14	9.1.0	9.2.0
2011-12	RAN#54	R5s110688	0875	-	Correction to EMM test case 9.2.3.1.1	9.1.0	9.2.0
2011-12	RAN#54	R5s110685	0876	-	Correction required to EMM test case 9.2.3.2.1a	9.1.0	9.2.0
2011-12	RAN#54	R5s110695	0877	-	Correction to Multi-Layer test case 13.1.2	9.1.0	9.2.0
2011-12	RAN#54	R5s110697	0878	-	Correction to EUTRA MAC test case 7.1.7.1.5 and 7.1.7.1.6	9.1.0	9.2.0
2011-12	RAN#54	R5s110694	0879	-	Correction to EMM test case 9.2.2.1.3	9.1.0	9.2.0

Date	TSG #	TSG Doc.	CR	Rev	Subject/Comment	Old	New
2011-12	RAN#54	R5s110687	0880	-	Correction to GCF WI-081 EUTRA MAC test case 7.1.3.9	9.1.0	9.2.0
2011-12	RAN#54	R5s110690	0881	-	Addition of GCF WI-086 EUTRA-UTRA Idle Mode test case 6.2.1.3	9.1.0	9.2.0
2011-12	RAN#54	R5s110696	0882	-	Correction to Idle mode test case 6.2.2.6	9.1.0	9.2.0
2011-12	RAN#54	R5s110699	0883	-	Addition of GCF WI-087 EUTRA RRC test case 8.3.3.3	9.1.0	9.2.0
2011-12	RAN#54	R5s110702	0884	-	Correction to EMM test case 9.3.1.6	9.1.0	9.2.0
2011-12	RAN#54	R5s110701	0885	-	Correction to EMM test case 9.3.1.17	9.1.0	9.2.0
2011-12	RAN#54	R5s110698	0886	-	Correction to EUTRA MAC test cases 7.1.6.1 and 7.1.6.2	9.1.0	9.2.0
2011-12	RAN#54	R5s110705	0887	-	Correction to EMM test case 9.2.3.2.14	9.1.0	9.2.0
2011-12	RAN#54	R5s110683	0888	-	Addition of GCF WI-086 EUTRA-UTRA (HSPA) RRC test case 8.4.1.4	9.1.0	9.2.0
2011-12	RAN#54	R5s110710	0889	-	Correction to EMM test case 9.2.1.1.24	9.1.0	9.2.0
2011-12	RAN#54	R5s110709	0890	-	Correction to EUTRA MAC test cases 7.1.7.1.1, 7.1.7.1.2, 7.1.7.1.3, 7.1.7.1.4, 7.1.7.1.5, 7.1.7.1.6 and 7.1.7.2.1 for LTE band 25	9.1.0	9.2.0
2011-12	RAN#54	R5s110708	0891	-	Correction to EUTRA RRC test case 8.1.2.8	9.1.0	9.2.0
2011-12	RAN#54	R5s110707	0892	-	Correction to RRC test case 8.2.4.8	9.1.0	9.2.0
2011-12	RAN#54	R5s110706	0893	-	Correction to MAC test case 7.1.2.3	9.1.0	9.2.0
2011-12	RAN#54	R5s110692	0894	-	Correction to EMM test cases 9.2.1.1.20 and 9.2.1.1.26	9.1.0	9.2.0
2011-12	RAN#54	R5s110693	0895	-	Correction to MAC test case 7.1.4.5	9.1.0	9.2.0
2011-12	RAN#54	R5s110718	0896	-	Addition of GCF WI-086 E-UTRA EMM testcase 9.2.3.2.13	9.1.0	9.2.0
2011-12	RAN#54	R5s110724	0898	-	Addition of GCF WI 88 EUTRA test case 8.3.2.6	9.1.0	9.2.0
2011-12	RAN#54	R5s110721	0899	-	Addition of GCF WI 87 EUTRA test case 8.3.2.1	9.1.0	9.2.0
2011-12	RAN#54	R5s110720	0900	-	Correction of LTE GERAN test cases	9.1.0	9.2.0
2012-03	RAN#55	R5-120721	0901	-	Routine maintenance and updates for EUTRA test model	9.2.0	9.3.0
2012-03	RAN#55	R5s110667	0971	-	Addition of GCF WI-081 E-UTRA ETWS testcase 14.1	9.2.0	9.3.0
2012-03	RAN#55	R5s110726	0970	-	Addition of GCF WI 86 EMM Test Case 9.2.3.3.1	9.2.0	9.3.0
2012-03	RAN#55	R5s110731	0960	-	Correction to GCF WI-082 EMM test case 9.2.2.1.6	9.2.0	9.3.0
2012-03	RAN#55	R5s110737	0968	-	Correction to EMM test case 9.2.2.1.6	9.2.0	9.3.0
2012-03	RAN#55	R5s110738	0969	-	Correction to EUTRA RRC test case 8.3.3.2	9.2.0	9.3.0
2012-03	RAN#55	R5s110739	0967	-	Correction to EUTRA MAC TBS test cases	9.2.0	9.3.0
2012-03	RAN#55	R5s110740	0966	-	Correction to EUTRA MAC test cases	9.2.0	9.3.0
2012-03	RAN#55	R5s110741	0965	-	Correction to GCF WI-088 Inter-RAT cell selection test cases 6.2.2.3 & 6.2.2.4	9.2.0	9.3.0
2012-03	RAN#55	R5s110742	0978	-	Types mismatch in f_UTRAN_CellInfo_GetNMO	9.2.0	9.3.0
2012-03	RAN#55	R5s110743	0974	-	Correction to EUTRA test cases to configure measurement gaps	9.2.0	9.3.0
2012-03	RAN#55	R5s110744	0964	-	Correction to EMM test cases	9.2.0	9.3.0
2012-03	RAN#55	R5s110746	0963	-	Correction to EUTRA RRC test cases 8.2.1.5 and 8.2.1.6	9.2.0	9.3.0
2012-03	RAN#55	R5s110747	0962	-	Addition of GCF WI 86,87 EUTRA test case 9.2.1.2.1b	9.2.0	9.3.0
2012-03	RAN#55	R5s110749	0977	-	Modification of template cas_RL_Modify_DPCHInfo_FDD	9.2.0	9.3.0
2012-03	RAN#55	R5s110750	0973	-	Correction to SMS over SG test cases 11.1.1 and 11.1.2	9.2.0	9.3.0

Date	TSG #	TSG Doc.	CR	Rev	Subject/Comment	Old	New
2012-03	RAN#55	R5s110751	0972	-	Correction to SMS over SG test cases 11.1.3 and 11.1.4	9.2.0	9.3.0
2012-03	RAN#55	R5s110752	0976	-	Correction to f_UTRAN_RB_SetUp	9.2.0	9.3.0
2012-03	RAN#55	R5s110753	0913	-	Correction to calls to f_EUTRA_SetSIB6_InterFreqCarrierFreqList_F8	9.2.0	9.3.0
2012-03	RAN#55	R5s110754	0975	-	Correction to GCF WI-086 Inter-RAT Handover testcases 8.4.1.2 & 8.4.1.4	9.2.0	9.3.0
2012-03	RAN#55	R5s110757	0914	-	Correction to f_EUTRA_TAU_Check	9.2.0	9.3.0
2012-03	RAN#55	R5s110759	0912	-	Addition of GCF WI 81 EUTRA test case 14.2	9.2.0	9.3.0
2012-03	RAN#55	R5s110761	0961	-	Addition of GCF WI 81 EUTRA test case 14.1	9.2.0	9.3.0
2012-03	RAN#55	R5s110763	0911	-	Addition of GCF WI87 EUTRA Idle Mode test case 6.2.3.1	9.2.0	9.3.0
2012-03	RAN#55	R5s110765	0910	-	Addition of EUTRA test case 8.3.1.9a	9.2.0	9.3.0
2012-03	RAN#55	R5s110767	0909	-	Addition of EUTRA test case 8.3.1.11a	9.2.0	9.3.0
2012-03	RAN#55	R5s110771	0908	-	Correction to UTRA RRC establishment cause and check of UTRA QoS params	9.2.0	9.3.0
2012-03	RAN#55	R5s110773	0907	-	Corrections to IPv6	9.2.0	9.3.0
2012-03	RAN#55	R5s110776	0924	-	Correction to LTE wk49 ATS	9.2.0	9.3.0
2012-03	RAN#55	R5s110777	0905	-	Regression CR for EUTRA EMM Testcases for D11wk49 ATS	9.2.0	9.3.0
2012-03	RAN#55	R5s110778	0906	-	Correction to GCF WI-082 EUTRA ESM Testcases 10.8.5, 10.8.6, 10.9.1	9.2.0	9.3.0
2012-03	RAN#55	R5s110779	0904	-	Correction to GCF WI-086 EUTRA Idle Mode Testcases 6.2.3.31	9.2.0	9.3.0
2012-03	RAN#55	R5s110782	0934	-	Correction to UTRAN SIB segmentation	9.2.0	9.3.0
2012-03	RAN#55	R5s110783	0933	-	Correction to GCF WI-081 EUTRA Idle Mode Testcase 6.1.2.13	9.2.0	9.3.0
2012-03	RAN#55	R5s110785	0903	-	Correction to GCF WI-081 RLC test cases 7.2.3.10 and 7.2.3.13	9.2.0	9.3.0
2012-03	RAN#55	R5s110787	0932	-	Correction to GCF WI-086 EUTRA Multi Layer Testcase 13.1.2	9.2.0	9.3.0
2012-03	RAN#55	R5s110788	0931	-	Correction to GCF WI-086 EUTRA RRC Testcase 8.4.1.4 and 8.4.12	9.2.0	9.3.0
2012-03	RAN#55	R5s110789	0930	-	Correction to GCF WI-082 EUTRA EMM Testcase 9.2.3.1.26	9.2.0	9.3.0
2012-03	RAN#55	R5s110790	0929	-	Correction to GCF WI-081 EUTRA RRC Testcase 8.3.1.7	9.2.0	9.3.0
2012-03	RAN#55	R5s110791	0928	-	Addition of GCF WI-086 E-UTRA EMM testcase 9.2.3.1.6	9.2.0	9.3.0
2012-03	RAN#55	R5s110801	0927	-	Addition of GCF WI-086 E-UTRA EMM testcase 9.2.3.3.4	9.2.0	9.3.0
2012-03	RAN#55	R5s120002	0926	-	Correction to function fl_RequestPDPContext	9.2.0	9.3.0
2012-03	RAN#55	R5s120003	0925	-	Correction to GCF WI-081 testcase 8.3.1.7	9.2.0	9.3.0
2012-03	RAN#55	R5s120006	0923	-	Correction to GCF WI-086 EUTRA RRC Testcase 8.3.3.2	9.2.0	9.3.0
2012-03	RAN#55	R5s120007	0948	-	LTE_TDD: Addition of GCF WI-091 EUTRA RRC testcase 8.2.1.5	9.2.0	9.3.0
2012-03	RAN#55	R5s120009	0947	-	Addition of GCF WI 81 EUTRA MAC test case 7.1.4.7a	9.2.0	9.3.0
2012-03	RAN#55	R5s120011	0946	-	LTE_TDD: Addition of GCF WI-091 EUTRA MAC testcase 7.1.4.7a	9.2.0	9.3.0
2012-03	RAN#55	R5s120013	0945	-	Addition of GCF WI 82 EMM Test Case 9.2.1.1.18	9.2.0	9.3.0
2012-03	RAN#55	R5s120016	0922	-	Addition of GCF WI87 EUTRA Idle Mode test case 6.2.3.14	9.2.0	9.3.0
2012-03	RAN#55	R5s120019	0921	-	Correction to EUTRA Idle Mode test case 6.2.1.3	9.2.0	9.3.0
2012-03	RAN#55	R5s120020	0920	-	Correction to EUTRA Idle Mode test case 6.1.2.13	9.2.0	9.3.0
2012-03	RAN#55	R5s120021	0919	-	Correction to EUTRA RRC test case 8.3.2.6	9.2.0	9.3.0
2012-03	RAN#55	R5s120022	0918	-	Correction to EMM test cases 9.2.2.2.2 and 9.3.2.2a	9.2.0	9.3.0

Date	TSG #	TSG Doc.	CR	Rev	Subject/Comment	Old	New
2012-03	RAN#55	R5s120023	0917	-	Correction to MAC test case 7.1.4.12	9.2.0	9.3.0
2012-03	RAN#55	R5s120024	0915	-	Correction to EUTRA RRC test cases 8.2.1.5	9.2.0	9.3.0
2012-03	RAN#55	R5s120025	0916	-	Addition of GCF WI-087 E-UTRA PLMN Selection testcase 6.2.1.4	9.2.0	9.3.0
2012-03	RAN#55	R5s120027	0944	-	Addition of GCF WI87 EUTRA Idle Mode test case 6.2.1.6	9.2.0	9.3.0
2012-03	RAN#55	R5s120029	0943	-	Addition of GCF WI-088 EUTRA-1xRTT test case 6.2.3.10	9.2.0	9.3.0
2012-03	RAN#55	R5s120033	0942	-	Correction to EUTRA RRC test cases 8.3.1.11	9.2.0	9.3.0
2012-03	RAN#55	R5s120034	0941	-	Correction to EMM test case 9.2.3.1.4	9.2.0	9.3.0
2012-03	RAN#55	R5s120035	0940	-	Correction to RLC test case 7.2.3.8 and MAC test case 7.1.7.2.1	9.2.0	9.3.0
2012-03	RAN#55	R5s120036	0939	-	Correction to GCF WI-081 EUTRA RRC Testcase 8.2.4.4	9.2.0	9.3.0
2012-03	RAN#55	R5s120037	0982	-	Addition of GCF WI-081 EUTRA MAC test case 7.1.8.1	9.2.0	9.3.0
2012-03	RAN#55	R5s120039	0938	-	Correction to EUTRA test cases 8.3.1.9 and 8.3.1.10	9.2.0	9.3.0
2012-03	RAN#55	R5s120040	0937	-	Correction to EUTRA MAC test cases 7.1.7.2.1, 7.1.6.1 and 7.1.6.2	9.2.0	9.3.0
2012-03	RAN#55	R5s120048	0936	-	Correction to EUTRA RRC test cases 8.3.3.2 and 8.3.3.3	9.2.0	9.3.0
2012-03	RAN#55	R5s120049	0935	-	Correction to GCF WI-086 Multi-Layer test case 13.1.2	9.2.0	9.3.0
2012-03	RAN#55	R5s120050	0953	-	Correction to GERAN modules in LTE ATS_wk49	9.2.0	9.3.0
2012-03	RAN#55	R5s120051	0952	-	Correction to GCF WI-088 EUTRA-HRPD test case 6.2.2.3	9.2.0	9.3.0
2012-03	RAN#55	R5s120052	0951	-	Correction to EUTRA_Measurement_Specific_Templates in LTE ATS wk49	9.2.0	9.3.0
2012-03	RAN#55	R5s120053	0954	-	Correction to GCF WI-081 EUTRA RRC Testcase 9.2.3.1.16	9.2.0	9.3.0
2012-03	RAN#55	R5s120054	0955	-	Addition of GCF WI 81 EUTRA MAC test case 7.1.3.2	9.2.0	9.3.0
2012-03	RAN#55	R5s120056	0950	-	Correction to TLLI deletion at GPRS detach	9.2.0	9.3.0
2012-03	RAN#55	R5s120057	0949	-	Correction to GCF WI-085 Interband test case 6.1.2.5 and 8.2.4.9	9.2.0	9.3.0
2012-03	RAN#55	R5s120059	0981	-	LTE_TDD Addition of GCF WI-091 EUTRA MAC test case 7.1.8.1	9.2.0	9.3.0
2012-03	RAN#55	R5s120061	0958	-	Correction to GCF WI-082 EUTRA NAS test case 9.2.1.1.7	9.2.0	9.3.0
2012-03	RAN#55	R5s120062	0957	-	Correction to GCF WI-081 EUTRA RRC test cases 8.5.1.2 and 8.5.1.4	9.2.0	9.3.0
2012-03	RAN#55	R5s120065	0956	-	Correction to EUTRA Idle Mode test cases 6.1.1.3, 6.1.2.7	9.2.0	9.3.0
2012-03	RAN#55	R5s120067	0959	-	Correction to EMM testcase 9.2.3.3.4	9.2.0	9.3.0
2012-03	RAN#55	R5s120068	0990	-	Addition of GCF WI-086 UTRAN-EUTRA RRC test case 8.1.3.7	9.2.0	9.3.0
2012-03	RAN#55	R5s120070	0989	-	Addition of GCF WI-086 UTRAN-EUTRA Multi-Layer test case 13.1.4	9.2.0	9.3.0
2012-03	RAN#55	R5s120072	0979	-	Correction to EMM testcase 9.2.1.2.1b	9.2.0	9.3.0
2012-03	RAN#55	R5s120073	0980	-	Correction to EutraBand_Type	9.2.0	9.3.0
2012-03	RAN#55	R5s120074	0983	-	Addition of GCF WI-088 EUTRA-1xRTT RRC test case 8.1.3.10	9.2.0	9.3.0
2012-03	RAN#55	R5s120076	0987	-	Correction to ICMPv6 template in LTE/SAE ATS_12wk05	9.2.0	9.3.0
2012-03	RAN#55	R5s120077	0984	-	Correction to EMM testcases 9.2.3.1.17 and 9.2.3.1.19	9.2.0	9.3.0
2012-03	RAN#55	R5s120078	0988	-	Correction to EUTRA Idle Mode test case 6.1.1.2	9.2.0	9.3.0
2012-03	RAN#55	R5s120079	0986	-	Correction to GCF WI-082 EMM test case 9.2.1.2.3	9.2.0	9.3.0
2012-03	RAN#55	R5s120080	0985	-	Correction to GCF WI-082 ESM test case 10.8.7	9.2.0	9.3.0
2012-03	RAN#55	RP-120188	0902	-	CR to 36.523-3: Add new verified and e-mail agreed TTCN test cases in the TC lists in 36.523-3 (prose), Annex A	9.2.0	9.3.0

Date	TSG #	TSG Doc.	CR	Rev	Subject/Comment	Old	New
2012-06	RAN#56	R5-121777	0991	-	Update of Timing parameters of E-UTRAN TDD cells	9.3.0	9.4.0
2012-06	RAN#56	R5s120082	1156	-	Correction to EUTRA RRC test case 8.3.2.6	9.3.0	9.4.0
2012-06	RAN#56	R5s120083	1155	-	Correction to EUTRA MAC testcase 7.1.4.14	9.3.0	9.4.0
2012-06	RAN#56	R5s120084	1154	-	Correction to EMM testcase 9.2.1.1.25	9.3.0	9.4.0
2012-06	RAN#56	R5s120086	1153	-	Addition of GCF WI 86 Multilayer test case 13.1.15	9.3.0	9.4.0
2012-06	RAN#56	R5s120088	1152	-	Correction to EUTRA MAC test cases 7.1.4.7a	9.3.0	9.4.0
2012-06	RAN#56	R5s120089	1150	-	Correction to EMM testcase 9.2.3.1.23	9.3.0	9.4.0
2012-06	RAN#56	R5s120090	1149	-	Correction to EUTRA Idle mode test case 6.2.3.14	9.3.0	9.4.0
2012-06	RAN#56	R5s120091	1151	-	Correction to EUTRA Idle mode test case 6.2.3.1	9.3.0	9.4.0
2012-06	RAN#56	R5s120095	1148	-	Correction to EUTRA testcases	9.3.0	9.4.0
2012-06	RAN#56	R5s120096	1147	-	Correction to EMM test case 9.2.3.2.17	9.3.0	9.4.0
2012-06	RAN#56	R5s120097	1146	-	Correction to LTE IRAT test cases	9.3.0	9.4.0
2012-06	RAN#56	R5s120098	1145	-	Correction to UTRAN Component in LTE ATS_12wk05	9.3.0	9.4.0
2012-06	RAN#56	R5s120099	1142	-	Correction to EUTRA Test Case 8.2.1.5 and 8.2.1.6	9.3.0	9.4.0
2012-06	RAN#56	R5s120100	1143	-	Correction to EUTRA EMM test case 9.2.1.2.11	9.3.0	9.4.0
2012-06	RAN#56	R5s120101	1144	-	Correction to DCI2 configuration	9.3.0	9.4.0
2012-06	RAN#56	R5s120102	1141	-	Addition of GCF WI-081 EUTRA Idle Mode test case 6.3.1	9.3.0	9.4.0
2012-06	RAN#56	R5s120104	1139	-	Correction to GCF WI-082 EMM test case 9.2.3.1.17	9.3.0	9.4.0
2012-06	RAN#56	R5s120106	1140	-	Correction to GERAN paging group calculation in LTE ATS_12wk05	9.3.0	9.4.0
2012-06	RAN#56	R5s120109	1138	-	Addition of GCF WI-082 EMM test case 9.2.3.1.9	9.3.0	9.4.0
2012-06	RAN#56	R5s120111	1136	-	Addition of GCF WI-086 EUTRA –UTRAN test case 13.1.16	9.3.0	9.4.0
2012-06	RAN#56	R5s120113	1137	-	Addition of GCF WI-086 EUTRA <>UTRA testcase 13.4.2.1	9.3.0	9.4.0
2012-06	RAN#56	R5s120115	1134	-	Addition of EUTRA Hybrid CSG Cell test case 6.4.1	9.3.0	9.4.0
2012-06	RAN#56	R5s120117	1135	-	Addition of GCF WI-086 EUTRA <>UTRA testcase 13.1.5	9.3.0	9.4.0
2012-06	RAN#56	R5s120119	1108	-	Regression CR for LTE wk09 ATS	9.3.0	9.4.0
2012-06	RAN#56	R5s120121	1133	-	Correction to TA transmission in wk09 TTCN	9.3.0	9.4.0
2012-06	RAN#56	R5s120122	1131	-	Correction to GCF WI-086 UTRAN-EUTRA test case 6.2.2.8	9.3.0	9.4.0
2012-06	RAN#56	R5s120124	1132	-	Correction to EUTRA RRC test case 8.1.1.3	9.3.0	9.4.0
2012-06	RAN#56	R5s120125	1130	-	Correction to EMM testcase 9.2.1.1.23, 9.2.3.2.4, 9.2.3.2.14, 9.2.3.2.2, 9.2.3.2.17	9.3.0	9.4.0
2012-06	RAN#56	R5s120127	1126	-	Correction to GCF WI-086 EUTRA-UTRAN test case 9.2.3.3.4	9.3.0	9.4.0
2012-06	RAN#56	R5s120129	1128	-	Correction to the implementation of SI 2 quarter message	9.3.0	9.4.0
2012-06	RAN#56	R5s120130	1129	-	Correction to WI-081 EUTRA Idle Mode Testcase 6.1.2.13	9.3.0	9.4.0
2012-06	RAN#56	R5s120132	1127	-	Correction to WI-086 EUTRA EMM Testcase 9.2.1.1.11	9.3.0	9.4.0
2012-06	RAN#56	R5s120133	1124	-	Correction to GCF WI-086 EUTRA EMM Testcase 9.2.1.2.11	9.3.0	9.4.0
2012-06	RAN#56	R5s120134	1125	-	Correction to EUTRA Auxiliary Functions in LTE/SAE ATS_12wk09	9.3.0	9.4.0
2012-06	RAN#56	R5s120135	1123	-	Correction to GCF WI-081 EUTRA MAC test cases 7.1.7.x	9.3.0	9.4.0
2012-06	RAN#56	R5s120136	1120	-	Correction to EUTRA Idle Updated Teststep	9.3.0	9.4.0

Date	TSG #	TSG Doc.	CR	Rev	Subject/Comment	Old	New
2012-06	RAN#56	R5s120137	1122	-	Correction to GCF WI-086 EUTRA EMM Testcase 9.2.3.3.1	9.3.0	9.4.0
2012-06	RAN#56	R5s120138	1121	-	Correction to GCF WI-86 EUTRA RRC Testcase 8.4.1.2 and 8.4.1.4	9.3.0	9.4.0
2012-06	RAN#56	R5s120139	1109	-	Addition of GCF WI-086 EUTRA <>UTRA testcase 13.3.2.1	9.3.0	9.4.0
2012-06	RAN#56	R5s120141	1119	-	Correction to UTRAN function f_UTRAN_GMM_RAU	9.3.0	9.4.0
2012-06	RAN#56	R5s120142	1118	-	Correction to f_EUTRA_IdleUpdated_Step14_15	9.3.0	9.4.0
2012-06	RAN#56	R5s120143	1117	-	Correction to GCF WI-086 EUTRA-UTRAN test case 9.2.3.2.9	9.3.0	9.4.0
2012-06	RAN#56	R5s120144	1116	-	LTE_TDD: Addition of GCF WI-091 EUTRA MAC testcase 7.1.4.14	9.3.0	9.4.0
2012-06	RAN#56	R5s120146	1115	-	Addition of EUTRA Idle Mode testcase 6.1.2.7a	9.3.0	9.4.0
2012-06	RAN#56	R5s120148	1112	-	Addition of EUTRA Idle Mode testcase 6.1.2.8a	9.3.0	9.4.0
2012-06	RAN#56	R5s120150	1111	-	Addition of GCF WI-091 EUTRA Idle Mode testcase 6.1.2.9a	9.3.0	9.4.0
2012-06	RAN#56	R5s120152	1114	-	Addition of EUTRA Idle Mode testcase 6.1.1.2a	9.3.0	9.4.0
2012-06	RAN#56	R5s120154	1113	-	Addition of EUTRA Idle Mode testcase 6.1.1.3b	9.3.0	9.4.0
2012-06	RAN#56	R5s120156	1110	-	Addition of EMM EUTRA <>UTRA testcase 9.2.1.2.1d	9.3.0	9.4.0
2012-06	RAN#56	R5s120158	1106	-	Addition of EUTRA Idle Mode testcase 6.1.1.6a	9.3.0	9.4.0
2012-06	RAN#56	R5s120160	1107	-	Addition of EUTRA Idle Mode testcase 6.1.1.1b	9.3.0	9.4.0
2012-06	RAN#56	R5s120162	1105	-	Correction to EMM test case 9.2.1.2.15	9.3.0	9.4.0
2012-06	RAN#56	R5s120165	1102	-	LTE_TDD: Addition of GCF WI-097 EUTRA Idle mode test case 6.2.1.4	9.3.0	9.4.0
2012-06	RAN#56	R5s120167	1103	-	LTE_TDD: Addition of GCF WI-097 EUTRA Idle mode test case 6.2.2.6	9.3.0	9.4.0
2012-06	RAN#56	R5s120169	1104	-	LTE_TDD: Addition of GCF WI-097 EUTRA Idle mode test case 6.2.3.14	9.3.0	9.4.0
2012-06	RAN#56	R5s120173	1101	-	LTE_TDD: Addition of EUTRA Idle mode test case 6.1.1.3b	9.3.0	9.4.0
2012-06	RAN#56	R5s120175	1100	-	LTE_TDD: Addition of EUTRA Idle mode test case 6.1.2.7a	9.3.0	9.4.0
2012-06	RAN#56	R5s120178	1032	-	Baseline upgrade of LTE ATS to March-12 in Rel-10	9.3.0	9.4.0
2012-06	RAN#56	R5s120179	1099	-	LTE_TDD: Addition of GCF WI-097 EUTRA Idle mode test case 6.2.1.6	9.3.0	9.4.0
2012-06	RAN#56	R5s120181	1097	-	LTE_TDD: Addition of GCF WI-097 EUTRA Idle mode test case 6.2.2.2	9.3.0	9.4.0
2012-06	RAN#56	R5s120183	1098	-	LTE_TDD: Addition of GCF WI-097 EUTRA Idle mode test case 6.2.3.1	9.3.0	9.4.0
2012-06	RAN#56	R5s120185	1093	-	LTE_TDD: Addition of GCF WI-092 EMM test case 9.2.1.1.12	9.3.0	9.4.0
2012-06	RAN#56	R5s120187	1094	-	LTE_TDD: Addition of GCF WI-092 EMM test case 9.2.3.1.10	9.3.0	9.4.0
2012-06	RAN#56	R5s120189	1095	-	LTE_TDD: Addition of GCF WI-092 EMM test case 9.2.3.1.11	9.3.0	9.4.0
2012-06	RAN#56	R5s120191	1096	-	LTE_TDD: Addition of GCF WI-092 EMM test case 9.2.3.1.12	9.3.0	9.4.0
2012-06	RAN#56	R5s120193	1091	-	LTE_TDD: Addition of GCF WI-092 EMM test case 9.3.1.4	9.3.0	9.4.0
2012-06	RAN#56	R5s120195	1092	-	LTE_TDD: Addition of GCF WI-092 EMM test case 9.3.1.5	9.3.0	9.4.0
2012-06	RAN#56	R5s120197	1090	-	Correction to EUTRA test case 7.1.4.12	9.3.0	9.4.0
2012-06	RAN#56	R5s120198	1089	-	Addition of GCF WI 81 EUTRA MAC test case 7.1.4.2	9.3.0	9.4.0
2012-06	RAN#56	R5s120200	1088	-	Correction to EUTRA test case 7.1.3.2	9.3.0	9.4.0
2012-06	RAN#56	R5s120201	1087	-	Correction to GCF WI-081 EUTRA RRC test case 8.2.1.5	9.3.0	9.4.0
2012-06	RAN#56	R5s120202	1085	-	LTE_TDD: Addition of GCF WI-092 EMM test case 9.2.1.1.11	9.3.0	9.4.0
2012-06	RAN#56	R5s120204	1086	-	LTE_TDD: Addition of GCF WI-092 EMM test case 9.2.3.1.18	9.3.0	9.4.0

Date	TSG #	TSG Doc.	CR	Rev	Subject/Comment	Old	New
2012-06	RAN#56	R5s120206	1084	-	Update of default bandwidth for signalling conformance tests in E-UTRA band 11 + 18	9.3.0	9.4.0
2012-06	RAN#56	R5s120207	1083	-	Correction to GCF WI-081 RLC test case 7.2.3.21	9.3.0	9.4.0
2012-06	RAN#56	R5s120208	1082	-	Correction to EUTRA test case 8.1.3.8	9.3.0	9.4.0
2012-06	RAN#56	R5s120209	1081	-	Correction to GCF WI-085 Interband test case 8.2.4.9	9.3.0	9.4.0
2012-06	RAN#56	R5s120210	1080	-	Correction to EMM testcase 9.2.3.3.5	9.3.0	9.4.0
2012-06	RAN#56	R5s120211	1079	-	Correction to GCF WI-082 EMM test case 9.2.3.1.26	9.3.0	9.4.0
2012-06	RAN#56	R5s120212	1078	-	Correction to EMM testcase 9.2.3.2.1a	9.3.0	9.4.0
2012-06	RAN#56	R5s120213	1077	-	Correction to EMM test case 9.2.2.1.8	9.3.0	9.4.0
2012-06	RAN#56	R5s120214	1076	-	LTE_TDD: Addition of GCF WI-091 EUTRA MAC testcase 7.1.3.2	9.3.0	9.4.0
2012-06	RAN#56	R5s120216	1075	-	Correction to GCF WI-082 EMM test case 9.2.3.1.16	9.3.0	9.4.0
2012-06	RAN#56	R5s120218	1074	-	Addition of GCF WI-087 EMM testcase 9.2.3.4.1	9.3.0	9.4.0
2012-06	RAN#56	R5s120220	1073	-	Correction to the template cs_508_UplinkPowerControlDedicated_Default	9.3.0	9.4.0
2012-06	RAN#56	R5s120221	1070	-	Addition of GCF WI-087 EUTRA - GERAN test case 6.2.3.15	9.3.0	9.4.0
2012-06	RAN#56	R5s120223	1072	-	Correction to default Packet Application type	9.3.0	9.4.0
2012-06	RAN#56	R5s120224	1071	-	Correction to GCF WI-082 EMM test case 9.2.3.1.9	9.3.0	9.4.0
2012-06	RAN#56	R5s120227	1069	-	Correction to EUTRA test case 6.1.1.4	9.3.0	9.4.0
2012-06	RAN#56	R5s120228	1068	-	Addition of EMM EUTRA <>UTRA testcase 9.2.3.2.1c	9.3.0	9.4.0
2012-06	RAN#56	R5s120230	1067	-	Addition of GCF WI-082 EMM test case 9.2.3.1.20	9.3.0	9.4.0
2012-06	RAN#56	R5s120232	1066	-	Addition of GCF WI-082 EMM test case 9.2.3.2.16	9.3.0	9.4.0
2012-06	RAN#56	R5s120234	1064	-	LTE_TDD: Addition of GCF WI-097 EMM test case 9.2.1.2.5	9.3.0	9.4.0
2012-06	RAN#56	R5s120236	1063	-	LTE_TDD: Addition of GCF WI-097 EMM test case 9.2.1.2.6	9.3.0	9.4.0
2012-06	RAN#56	R5s120238	1062	-	LTE_TDD: Addition of GCF WI-097 EMM test case 9.2.1.2.7	9.3.0	9.4.0
2012-06	RAN#56	R5s120240	1061	-	LTE_TDD: Addition of GCF WI-097 EMM test case 9.2.1.2.15	9.3.0	9.4.0
2012-06	RAN#56	R5s120243	1065	-	Correction to EUTRA-HRPD test case 6.2.3.8	9.3.0	9.4.0
2012-06	RAN#56	R5s120244	1060	-	Addition of GCF WI-087 EUTRA RRC testcase 8.3.2.2	9.3.0	9.4.0
2012-06	RAN#56	R5s120246	1059	-	LTE_TDD: Addition of GCF WI-097 EUTRA RRC testcase 8.3.2.2	9.3.0	9.4.0
2012-06	RAN#56	R5s120248	1058	-	LTE_TDD: Addition of GCF WI-097 EUTRA RRC testcase 8.3.2.1	9.3.0	9.4.0
2012-06	RAN#56	R5s120250	1047	-	Correction to GCF WI-081 EUTRA test case 8.5.4.1	9.3.0	9.4.0
2012-06	RAN#56	R5s120251	1057	-	LTE_TDD: Addition of GCF WI-097 EMM test case 9.2.3.2.5	9.3.0	9.4.0
2012-06	RAN#56	R5s120253	1055	-	LTE_TDD: Addition of GCF WI-097 EMM test case 9.2.3.2.6	9.3.0	9.4.0
2012-06	RAN#56	R5s120255	1056	-	LTE_TDD: Addition of GCF WI-097 EMM test case 9.2.3.2.7	9.3.0	9.4.0
2012-06	RAN#56	R5s120257	1054	-	LTE_TDD: Addition of GCF WI-097 EMM test case 9.2.1.2.9	9.3.0	9.4.0
2012-06	RAN#56	R5s120259	1053	-	LTE_TDD: Addition of GCF WI-097 EMM test case 9.2.1.2.11	9.3.0	9.4.0
2012-06	RAN#56	R5s120261	1052	-	Correction to EMM testcase 9.2.3.2.17	9.3.0	9.4.0
2012-06	RAN#56	R5s120262	1051	-	Correction to EMM testcase 9.2.1.1.18	9.3.0	9.4.0
2012-06	RAN#56	R5s120263	1049	-	Correction to EMM testcase 9.2.2.1.10	9.3.0	9.4.0
2012-06	RAN#56	R5s120264	1050	-	Correction to EMM testcase 9.2.3.1.25, 9.2.3.1.26, 9.2.1.1.23, 9.3.1.4, 9.3.1.5 and 9.3.1.6	9.3.0	9.4.0

Date	TSG #	TSG Doc.	CR	Rev	Subject/Comment	Old	New
2012-06	RAN#56	R5s120265	1048	-	Correction to EMM test cases 9.2.3.1.9, 9.2.1.2.1b, 9.2.2.1.4 and 9.2.3.2.1b	9.3.0	9.4.0
2012-06	RAN#56	R5s120266	1045	-	Correction of GCF WI 86 Multilayer test case 13.1.2	9.3.0	9.4.0
2012-06	RAN#56	R5s120271	1046	-	Correction to GCF WI-086 EUTRA EMM Testcase 9.2.3.3.5	9.3.0	9.4.0
2012-06	RAN#56	R5s120274	1044	-	Correction to EMM Test Cases	9.3.0	9.4.0
2012-06	RAN#56	R5s120275	1043	-	LTE_TDD: Addition of EUTRA Idle mode test case 6.1.1.1b	9.3.0	9.4.0
2012-06	RAN#56	R5s120277	1042	-	LTE_TDD: Addition of EUTRA Idle mode test case 6.1.2.8a	9.3.0	9.4.0
2012-06	RAN#56	R5s120279	1041	-	LTE_TDD: Addition of EUTRA Idle mode test case 6.1.2.9a	9.3.0	9.4.0
2012-06	RAN#56	R5s120281	1039	-	LTE_TDD: Addition of EUTRA Idle mode test case 6.1.1.2a	9.3.0	9.4.0
2012-06	RAN#56	R5s120283	1040	-	LTE_TDD: Addition of EUTRA Idle mode test case 6.1.1.6a	9.3.0	9.4.0
2012-06	RAN#56	R5s120287	1038	-	Addition of GCF WI-087 EUTRA - GERAN test case 6.2.3.16	9.3.0	9.4.0
2012-06	RAN#56	R5s120289	1037	-	Correction to Timing Calculation on EUTRA Cells	9.3.0	9.4.0
2012-06	RAN#56	R5s120290	1036	-	Correction for SIB 7 default contents	9.3.0	9.4.0
2012-06	RAN#56	R5s120291	1035	-	Correction to GCF WI-082 EMM test case 9.2.3.1.16	9.3.0	9.4.0
2012-06	RAN#56	R5s120292	1034	-	LTE_TDD: Addition of EUTRA RRC test case 8.1.2.9	9.3.0	9.4.0
2012-06	RAN#56	R5s120294	1033	-	Correction to template cdr_RRC_ConnReqWith_v860ext	9.3.0	9.4.0
2012-06	RAN#56	R5s120295	1031	-	LTE_TDD: Addition of GCF WI-092 EMM test case 9.2.3.1.17	9.3.0	9.4.0
2012-06	RAN#56	R5s120297	1030	-	Correction to EUTRA MAC test case 7.1.4.10	9.3.0	9.4.0
2012-06	RAN#56	R5s120298	1029	-	Correction to GCF WI-082 EUTRA CSG Testcase 9.2.3.1.9	9.3.0	9.4.0
2012-06	RAN#56	R5s120301	1028	-	Addition of GCF WI 86 Multilayer test case 13.1.3	9.3.0	9.4.0
2012-06	RAN#56	R5s120303	1027	-	Correction for GERAN message definitions	9.3.0	9.4.0
2012-06	RAN#56	R5s120304	1026	-	Correction to GCF WI-081 EUTRA MAC testcase 7.1.8.1	9.3.0	9.4.0
2012-06	RAN#56	R5s120305	1025	-	Correction for EMM testcase 9.2.3.1.22	9.3.0	9.4.0
2012-06	RAN#56	R5s120306	1024	-	LTE_TDD: Addition of GCF WI-097 EUTRA - GERAN test case 6.2.3.15	9.3.0	9.4.0
2012-06	RAN#56	R5s120308	1023	-	Addition of GCF WI 86 Multilayer test case 13.4.2.4	9.3.0	9.4.0
2012-06	RAN#56	R5s120310	1022	-	Correction to EUTRA test case 8.3.2.2	9.3.0	9.4.0
2012-06	RAN#56	R5s120312	1021	-	Correction to GCF WI-086 EUTRA Multilayer Testcase 13.4.2.1	9.3.0	9.4.0
2012-06	RAN#56	R5s120313	1017	-	Correction to GCF WI-081 EUTRA MAC Testcase 7.1.4.12	9.3.0	9.4.0
2012-06	RAN#56	R5s120314	1018	-	Correction to GCF WI-081 EUTRA EPC testcase 9.2.1.1.2 and 9.2.2.1.8	9.3.0	9.4.0
2012-06	RAN#56	R5s120315	1019	-	Correction to GCF WI-089 EUTRA RRCTestcase 8.3.2.6	9.3.0	9.4.0
2012-06	RAN#56	R5s120316	1020	-	Correction to GCF WI-081 EUTRA MAC SPS testcase 7.1.4.2	9.3.0	9.4.0
2012-06	RAN#56	R5s120317	1015	-	Correction to GCF WI-086 EUTRA Multilayer Testcase 13.4.2.1	9.3.0	9.4.0
2012-06	RAN#56	R5s120318	1016	-	Correction to EUTRA Idle Mode Testcase 6.1.2.8a and 6.1.2.9a	9.3.0	9.4.0
2012-06	RAN#56	R5s120320	1014	-	Correction to EMM test case 9.2.3.3.1	9.3.0	9.4.0
2012-06	RAN#56	R5s120321	1013	-	Correction to UTRA SIB19 for IE “qRxLevMinEUTRA”	9.3.0	9.4.0
2012-06	RAN#56	R5s120322	1012	-	Correction of EUTRA Idle Mode Testcase 6.1.1.1b	9.3.0	9.4.0
2012-06	RAN#56	R5s120323	1011	-	Correction for GERAN SI2Quater message content	9.3.0	9.4.0
2012-06	RAN#56	R5s120325	1010	-	Correction to GCF WI-087 EUTRAN EMM Testcase 9.2.1.2.9	9.3.0	9.4.0

Date	TSG #	TSG Doc.	CR	Rev	Subject/Comment	Old	New
2012-06	RAN#56	R5s120326	1009	-	Correction to GCF WI-082 EUTRA CSG Testcase 9.2.1.1.18	9.3.0	9.4.0
2012-06	RAN#56	R5s120327	1007	-	Correction of GCF WI-082 EUTRA EMM Testcase 9.2.3.2.4	9.3.0	9.4.0
2012-06	RAN#56	R5s120328	1008	-	Correction of GCF WI-086 EUTRA EMM Testcase 9.2.3.3.5	9.3.0	9.4.0
2012-06	RAN#56	R5s120329	1006	-	Addition of GCF WI-082 EUTRA CSG Testcase 9.3.1.18	9.3.0	9.4.0
2012-06	RAN#56	R5s120334	1005	-	Correction to the Band applicability of single frequency operation test cases	9.3.0	9.4.0
2012-06	RAN#56	R5s120335	1004	-	LTE_TDD: Addition of GCF WI-097 Idle mode test case 6.2.3.16	9.3.0	9.4.0
2012-06	RAN#56	R5s120338	1003	-	Correction to GCF WI-082 EUTRA CSG Testcase 9.2.1.1.18	9.3.0	9.4.0
2012-06	RAN#56	R5s120339	1001	-	Correction to GCF WI-087 EUTRA EMM Testcase 9.2.1.2.8	9.3.0	9.4.0
2012-06	RAN#56	R5s120340	1002	-	LTE_TDD: Addition of GCF WI-092 EMM test case 9.2.3.1.15	9.3.0	9.4.0
2012-06	RAN#56	R5s120342	1000	-	Correction to GCF WI-086 EUTRA Multilayer Testcase 13.1.5	9.3.0	9.4.0
2012-06	RAN#56	R5s120344	0999	-	Correction to GCF WI-081 EUTRA MAC SPS testcase 7.1.4.14	9.3.0	9.4.0
2012-06	RAN#56	R5s120345	0998	-	Correction to GCF WI-091 EUTRA RLC test cases 7.2.3.10 and 7.2.3.13	9.3.0	9.4.0
2012-06	RAN#56	R5s120346	0997	-	Correction to EMM test case 9.2.1.2.1d	9.3.0	9.4.0
2012-06	RAN#56	R5s120347	0996	-	Correction to EMM test case 9.2.1.1.7	9.3.0	9.4.0
2012-06	RAN#56	RP-120653	0995	-	CR to 36.523-3: Add new verified and e-mail agreed TTCN test cases in the TC lists in 36.523-3 (prose), Annex A	9.3.0	9.4.0
2012-06	RAN#56	R5-121779	0992	-	36523-3 routine maintenance and updates	9.4.0	10.0.0
2012-06	RAN#56	R5-121850	0993	-	Correction to Postamble Procedure for E-UTRAN to GERAN tests	9.4.0	10.0.0
2012-06	RAN#56	R5-122121	0994	-	Add new guidelines for TC executions	9.4.0	10.0.0
2012-09	RAN#57	R5-123081	1157	-	Update the guidelines for TC executions	10.0.0	10.1.0
2012-09	RAN#57	R5-123245	1158	-	Correction to postamble procedure of EUTRAN-GERAN test cases	10.0.0	10.1.0
2012-09	RAN#57	R5-123310	1159	-	Removal of technical content in 36.523-3 v9.4.0 and substitution with pointer to the next Release	10.0.0	10.1.0
2012-09	RAN#57	R5-123740	1160	-	36523-3: Routine maintenance and updates	10.0.0	10.1.0
2012-09	RAN#57	R5s120348	1161	-	Addition of Rel-9 EUTRA RRC test case 8.1.2.14	10.0.0	10.1.0
2012-09	RAN#57	R5s120350	1162	-	Addition of GCF WI-087 EUTRA-GERAN test case 6.2.3.21	10.0.0	10.1.0
2012-09	RAN#57	R5s120352	1163	-	LTE_TDD : Addition of GCF WI-091 EUTRA MAC Testcase 7.1.6.1	10.0.0	10.1.0
2012-09	RAN#57	R5s120354	1164	-	LTE_TDD : Addition of GCF WI-091 EUTRA MAC Testcase 7.1.6.2	10.0.0	10.1.0
2012-09	RAN#57	R5s120356	1165	-	Correction to EMM test case 9.2.3.4.1	10.0.0	10.1.0
2012-09	RAN#57	R5s120357	1166	-	Correction to GERAN paging group calculation	10.0.0	10.1.0
2012-09	RAN#57	R5s120358	1167	-	Addition of GCF WI 86 EMM test case 9.2.3.3.5a	10.0.0	10.1.0
2012-09	RAN#57	R5s120360	1168	-	Enhanced decoding of GERAN Types in LTE/SAE ATS	10.0.0	10.1.0
2012-09	RAN#57	R5s120361	1169	-	Correction to Manual PLMN Selection after Switch On in LTE/SAE ATS	10.0.0	10.1.0
2012-09	RAN#57	R5s120366	1170	-	Correction to template "cds_DL_CommonInformation_CompressedMode_FDD" in LTE/SAE ATS	10.0.0	10.1.0
2012-09	RAN#57	R5s120367	1171	-	Addition of GCF WI-082 EMM CSG test case 9.2.1.2.14	10.0.0	10.1.0
2012-09	RAN#57	R5s120369	1172	-	Correction to EUTRA MAC test case 7.1.1.2	10.0.0	10.1.0
2012-09	RAN#57	R5s120370	1173	-	Correction to EUTRA MAC test case 7.1.4.7a	10.0.0	10.1.0
2012-09	RAN#57	R5s120371	1174	-	Correction to DRX parameter in the Tracking Area Update Request message	10.0.0	10.1.0

Date	TSG #	TSG Doc.	CR	Rev	Subject/Comment	Old	New
2012-09	RAN#57	R5s120372	1175	-	Addition of GCF WI-087 EUTRA testcase 8.4.3.2	10.0.0	10.1.0
2012-09	RAN#57	R5s120374	1176	-	Addition of GCF WI-087 EUTRA testcase 8.4.3.3	10.0.0	10.1.0
2012-09	RAN#57	R5s120377	1177	-	Correction to EUTRA SIB 6 content for combination C10	10.0.0	10.1.0
2012-09	RAN#57	R5s120378	1178	-	Addition of GCF WI-086 EUTRA -UTRAN test case 9.2.3.3.2	10.0.0	10.1.0
2012-09	RAN#57	R5s120380	1179	-	Correction to EMM test case 9.3.1.18	10.0.0	10.1.0
2012-09	RAN#57	R5s120381	1180	-	Addition of GCF WI 86 LTE<>UTRAN test case 9.2.3.3.3	10.0.0	10.1.0
2012-09	RAN#57	R5s120383	1181	-	Correction to Uplink F4 Frequency for EUTRA Band 5	10.0.0	10.1.0
2012-09	RAN#57	R5s120386	1182	-	LTE_TDD : Addition of GCF WI-097 EUTRA EMM Testcase 9.2.1.2.8	10.0.0	10.1.0
2012-09	RAN#57	R5s120390	1183	-	LTE_TDD : Addition of GCF WI-097 EUTRA EMM Testcase 9.2.3.2.9	10.0.0	10.1.0
2012-09	RAN#57	R5s120393	1184	-	Addition of Rel9 EUTRA RRC Testcase 8.2.1.8	10.0.0	10.1.0
2012-09	RAN#57	R5s120395	1185	-	LTE_TDD : Addition of Rel9 EUTRA RRC Testcase 8.1.2.14	10.0.0	10.1.0
2012-09	RAN#57	R5s120397	1186	-	Addition of GCF WI-086 EUTRA<>UTRA HSPA Handover Testcase 8.4.1.5	10.0.0	10.1.0
2012-09	RAN#57	R5s120399	1187	-	LTE_TDD: Addition of Rel9 EUTRA RRC Testcase 8.2.1.8	10.0.0	10.1.0
2012-09	RAN#57	R5s120401	1188	-	LTE_TDD: Addition of GCF WI-097 EUTRA test case 6.2.3.21	10.0.0	10.1.0
2012-09	RAN#57	R5s120403	1189	-	Addition of GCF WI-088 EUTRA Idle Mode Testcase 6.2.3.7	10.0.0	10.1.0
2012-09	RAN#57	R5s120405	1190	-	LTE_TDD: Addition of GCF WI-096 EUTRA test case 8.3.2.3	10.0.0	10.1.0
2012-09	RAN#57	R5s120407	1191	-	Addition of GCF WI-088 EUTRA<>CDMA200 1XRTT Testcase 6.2.3.9	10.0.0	10.1.0
2012-09	RAN#57	R5s120409	1192	-	Addition of EMM testcase 9.2.1.1.1b	10.0.0	10.1.0
2012-09	RAN#57	R5s120411	1193	-	Addition of EMM testcase 9.2.1.1.13a	10.0.0	10.1.0
2012-09	RAN#57	R5s120413	1194	-	Addition of EMM testcase 9.2.1.1.15a	10.0.0	10.1.0
2012-09	RAN#57	R5s120415	1195	-	Addition of EMM testcase 9.2.1.1.16a	10.0.0	10.1.0
2012-09	RAN#57	R5s120417	1196	-	Addition of EMM testcase 9.2.3.1.18a	10.0.0	10.1.0
2012-09	RAN#57	R5s120419	1197	-	Addition of EMM testcase 9.2.1.1.7a	10.0.0	10.1.0
2012-09	RAN#57	R5s120421	1198	-	Addition of EMM testcase 9.2.3.1.15a	10.0.0	10.1.0
2012-09	RAN#57	R5s120423	1199	-	Addition of GCF WI-087 EUTRA - GERAN test case 6.2.3.17	10.0.0	10.1.0
2012-09	RAN#57	R5s120425	1200	-	Addition of GCF WI-087 EUTRA - GERAN test case 6.2.3.18	10.0.0	10.1.0
2012-09	RAN#57	R5s120427	1201	-	Correction to GCF WI-086 EUTRA EMM Testcase 9.2.1.2.1b	10.0.0	10.1.0
2012-09	RAN#57	R5s120431	1202	-	Addition of Rel 9 EUTRA RRC Interband Testcase 8.2.4.13	10.0.0	10.1.0
2012-09	RAN#57	R5s120433	1203	-	Addition of Rel9 EUTRA RRC Interband Testcase 8.1.3.11	10.0.0	10.1.0
2012-09	RAN#57	R5s120436	1204	-	Addition of Rel-9 EUTRA-HRPD Idle Mode test case 6.2.3.7a	10.0.0	10.1.0
2012-09	RAN#57	R5s120440	1205	-	Correction to GCF WI-086 EMM test case 9.2.3.3.4	10.0.0	10.1.0
2012-09	RAN#57	R5s120442	1206	-	LTE_TDD: Addition of GCF WI-097 EMM test case 9.2.1.2.13	10.0.0	10.1.0
2012-09	RAN#57	R5s120446	1207	-	LTE_TDD: Addition of Rel9 EUTRA RRC Interband Testcase 8.1.3.11	10.0.0	10.1.0
2012-09	RAN#57	R5s120448	1208	-	LTE_TDD: Addition of Rel 9 EUTRA RRC Interband Testcase 8.2.4.13	10.0.0	10.1.0
2012-09	RAN#57	R5s120450	1209	-	Addition of Rel9 EUTRA RRC Interband Testcase 8.1.3.12	10.0.0	10.1.0
2012-09	RAN#57	R5s120452	1210	-	LTE_TDD: Addition of GCF WI-097 EMM test case 9.2.3.2.8	10.0.0	10.1.0
2012-09	RAN#57	R5s120455	1211	-	Correction to GCF WI-086 EUTRA-UTRAN Multi-layer test case 13.1.4	10.0.0	10.1.0

Date	TSG #	TSG Doc.	CR	Rev	Subject/Comment	Old	New
2012-09	RAN#57	R5s120456	1212	-	Addition of Rel9 EUTRA RRC Interband Testcase 8.2.4.15	10.0.0	10.1.0
2012-09	RAN#57	R5s120458	1213	-	Addition of GCF WI-086 EUTRA EMM Testcase 9.2.1.2.1c	10.0.0	10.1.0
2012-09	RAN#57	R5s120461	1214	-	Correction to EMM test case 9.2.1.2.1d	10.0.0	10.1.0
2012-09	RAN#57	R5s120462	1215	-	Correction to f_UTRAN_PhyChReconf_InterRatCompresseModeActivate	10.0.0	10.1.0
2012-09	RAN#57	R5s120463	1216	-	Correction to EMM test case 9.2.3.1.4	10.0.0	10.1.0
2012-09	RAN#57	R5s120464	1217	-	Correction to EMM test case 9.2.1.1.24	10.0.0	10.1.0
2012-09	RAN#57	R5s120465	1218	-	Addition of GCF WI-088 EUTRA<>CDMA200 1XRTT RRC Testcase 8.3.2.9	10.0.0	10.1.0
2012-09	RAN#57	R5s120469	1219	-	Correction to function f_EUTRA_Capability in LTE/SAE ATS	10.0.0	10.1.0
2012-09	RAN#57	R5s120470	1220	-	Correction to usage of IP packets in EUTRA Test Mode B for IPv6-only UEs	10.0.0	10.1.0
2012-09	RAN#57	R5s120473	1221	-	Addition of Rel 9 EUTRA RRC Interband Testcase 8.2.4.14	10.0.0	10.1.0
2012-09	RAN#57	R5s120475	1222	-	Correction to GCF WI-081 EUTRA MAC DRX testcase 7.1.6.1	10.0.0	10.1.0
2012-09	RAN#57	R5s120476	1223	-	Correction for GERAN SI2Quater message content	10.0.0	10.1.0
2012-09	RAN#57	R5s120477	1224	-	Correction to EUTRA Idle mode test case 6.2.2.2	10.0.0	10.1.0
2012-09	RAN#57	R5s120478	1225	-	Correction to GCF WI-086 EMM Testcase 9.2.3.3.5	10.0.0	10.1.0
2012-09	RAN#57	R5s120479	1226	-	Correction to ESM testcases 10.8.5 and 10.8.6	10.0.0	10.1.0
2012-09	RAN#57	R5s120480	1227	-	Correction to function f_EUTRA_RmvFbdnPLMN and CSG test cases	10.0.0	10.1.0
2012-09	RAN#57	R5s120481	1228	-	Correction to Multilayer test case 13.4.2.4	10.0.0	10.1.0
2012-09	RAN#57	R5s120482	1229	-	Correction to EMM test case 9.2.3.3.2	10.0.0	10.1.0
2012-09	RAN#57	R5s120483	1230	-	Correction GCF WI-082 EUTRA EMM Testcase 9.2.3.1.23	10.0.0	10.1.0
2012-09	RAN#57	R5s120484	1231	-	Correction GCF WI-086 EUTRA EMM Testcase 9.2.3.2.9	10.0.0	10.1.0
2012-09	RAN#57	R5s120485	1232	-	Correction GCF WI-086 EUTRA Multilayer Testcase 13.1.3	10.0.0	10.1.0
2012-09	RAN#57	R5s120486	1233	-	Correction GCF WI-086 EUTRA EMM Testcase 9.2.3.2.1c	10.0.0	10.1.0
2012-09	RAN#57	R5s120487	1234	-	Correction GCF WI-081 EUTRA MAC Testcase 7.1.4.12	10.0.0	10.1.0
2012-09	RAN#57	R5s120488	1235	-	Correction to EUTRA RRC test case 8.5.4.1	10.0.0	10.1.0
2012-09	RAN#57	R5s120489	1236	-	Correction GCF WI-086 EUTRA Idle Mode Testcase 6.2.1.2	10.0.0	10.1.0
2012-09	RAN#57	R5s120490	1237	-	Addition of GCF WI-086 EUTRA-UTRAN test case 8.4.2.2	10.0.0	10.1.0
2012-09	RAN#57	R5s120492	1238	-	LTE_TDD: Addition of Rel 9 EUTRA RRC Interband Testcase 8.2.4.14	10.0.0	10.1.0
2012-09	RAN#57	R5s120494	1239	-	Correction for GERAN Packet Uplink Assignment template	10.0.0	10.1.0
2012-09	RAN#57	R5s120497	1240	-	Correction to EUTRA RRC test case 8.1.3.7	10.0.0	10.1.0
2012-09	RAN#57	R5s120498	1241	-	Addition of GCF WI-087 Multi-layer test case 13.1.7	10.0.0	10.1.0
2012-09	RAN#57	R5s120500	1242	-	Addition of EUTRA Multi-layer test case 13.1.8	10.0.0	10.1.0
2012-09	RAN#57	R5s120502	1243	-	Addition of GCF WI-087 EUTRA - GERAN test case 6.2.3.19	10.0.0	10.1.0
2012-09	RAN#57	R5s120504	1244	-	Addition of GCF WI-087 Multi-layer test case 13.1.9	10.0.0	10.1.0
2012-09	RAN#57	R5s120506	1245	-	Correction to Rel9 EUTRA RRC testcase 8.2.1.8	10.0.0	10.1.0
2012-09	RAN#57	R5s120507	1246	-	Correction to EMM test case 9.2.1.2.13	10.0.0	10.1.0
2012-09	RAN#57	R5s120508	1247	-	Correction to EMM test case 9.1.5.1	10.0.0	10.1.0
2012-09	RAN#57	R5s120509	1248	-	Addition of GCF WI-087 Multi-layer test case 13.1.10	10.0.0	10.1.0

Date	TSG #	TSG Doc.	CR	Rev	Subject/Comment	Old	New
2012-09	RAN#57	R5s120511	1249	-	Correction to f_UT_ConfigureCombinedAttach and f_UT_ConfigureEPSAttach	10.0.0	10.1.0
2012-09	RAN#57	R5s120515	1250	-	Addition of GCF WI-087 Multi-layer test case 6.2.3.20	10.0.0	10.1.0
2012-09	RAN#57	R5s120517	1251	-	Addition of Rel9 EUTRA<>CDMA2000 1xRTT Testcase 6.2.3.9a	10.0.0	10.1.0
2012-09	RAN#57	R5s120519	1252	-	Correction to GERAN Type Defs in LTE/SAE ATS	10.0.0	10.1.0
2012-09	RAN#57	R5s120520	1253	-	Correction to initial ’Power Off’ MMI command in LTE/SAE ATS	10.0.0	10.1.0
2012-09	RAN#57	R5s120521	1254	-	Addition of GCF WI-087 EUTRA - GERAN test case 6.2.3.24	10.0.0	10.1.0
2012-09	RAN#57	R5s120523	1255	-	Correction to function f_SelectionExpr	10.0.0	10.1.0
2012-09	RAN#57	R5s120524	1256	-	Addition of Rel9 EUTRA<>CDMA2000 1xRTT Testcase 6.2.3.10a	10.0.0	10.1.0
2012-09	RAN#57	R5s120527	1257	-	Correction to GCF WI-087 testcase 6.2.3.16	10.0.0	10.1.0
2012-09	RAN#57	R5s120528	1258	-	Correction to Selection Expression for EMM test case 9.2.3.2.4 and 9.2.1.2.4	10.0.0	10.1.0
2012-09	RAN#57	R5s120529	1259	-	Correction of GCF WI-086 EMM testcase 9.2.3.2.1a	10.0.0	10.1.0
2012-09	RAN#57	R5s120531	1260	-	Correction to multiLayer test case 13.1.3	10.0.0	10.1.0
2012-09	RAN#57	R5s120532	1261	-	Correction to EMM test case 9.2.3.3.5a	10.0.0	10.1.0
2012-09	RAN#57	R5s120533	1262	-	Correction to WI-086 EUTRA-UTRAN EMM Testcase 9.2.3.2.14	10.0.0	10.1.0
2012-09	RAN#57	R5s120534	1263	-	Correction to function fl_EUTRA_CheckNoAttach_Common	10.0.0	10.1.0
2012-09	RAN#57	R5s120535	1264	-	Addition of GCF WI-086 UTRA<>EUTRA HSPA Handover Testcase 8.4.2.4	10.0.0	10.1.0
2012-09	RAN#57	R5s120551	1265	-	Correction to GCF WI-086 RRC test case 8.4.1.5	10.0.0	10.1.0
2012-09	RAN#57	R5s120552	1266	-	Addition of GCF WI-089 EUTRA test case 8.3.2.5	10.0.0	10.1.0
2012-09	RAN#57	R5s120554	1267	-	Addition of Rel-9 EUTRA-HRPD Idle Mode test case 6.2.3.8a	10.0.0	10.1.0
2012-09	RAN#57	R5s120556	1268	-	LTE_TDD: Addition of GCF WI-097 EUTRA Idle Mode testcase 6.2.3.17	10.0.0	10.1.0
2012-09	RAN#57	R5s120558	1269	-	LTE_TDD: Addition of GCF WI-097 EUTRA Idle Mode testcase 6.2.3.18	10.0.0	10.1.0
2012-09	RAN#57	R5s120560	1270	-	LTE_TDD: Addition of GCF WI-097 EMM test case 9.2.3.2.11	10.0.0	10.1.0
2012-09	RAN#57	R5s120562	1271	-	LTE_TDD: Addition of GCF WI-097 EMM test case 9.2.3.4.1	10.0.0	10.1.0
2012-09	RAN#57	R5s120564	1272	-	Correction to GCF WI-086 EUTRA-UTRAN test case 9.2.2.1.10	10.0.0	10.1.0
2012-09	RAN#57	R5s120565	1273	-	Correction to EUTRA RRC test case 8.1.3.7	10.0.0	10.1.0
2012-09	RAN#57	R5s120566	1274	-	Correction to applicability for test case 6.1.2.15	10.0.0	10.1.0
2012-09	RAN#57	R5s120567	1275	-	Correction to EMM test case 9.2.3.4.1	10.0.0	10.1.0
2012-09	RAN#57	R5s120568	1276	-	Addition of GCF WI-089 EUTRA test case 6.2.1.1	10.0.0	10.1.0
2012-09	RAN#57	R5s120570	1277	-	Addition of GCF WI-087 LTE<>GERAN Multilayer Testcase 13.3.2.2	10.0.0	10.1.0
2012-09	RAN#57	R5s120572	1278	-	Correction EUTRA<>GERAN Testcases using Multiple GERAN Cell	10.0.0	10.1.0
2012-09	RAN#57	R5s120573	1279	-	Correction to EUTRA<>UTRA Band IX Testcases	10.0.0	10.1.0
2012-09	RAN#57	R5s120574	1280	-	Correction to GCF WI-087 EUTRA EMM testcase 9.2.3.2.13	10.0.0	10.1.0
2012-09	RAN#57	R5s120575	1281	-	Correction to EMM test cases 9.3.1.4, 9.3.1.5, 9.3.1.6	10.0.0	10.1.0
2012-09	RAN#57	R5s120576	1282	-	Correction for function fl_ConvertPLMN	10.0.0	10.1.0
2012-09	RAN#57	R5s120579	1283	-	Correction to GCF WI-087 EUTRA EMM testcase 9.2.3.2.8	10.0.0	10.1.0
2012-09	RAN#57	R5s120580	1284	-	LTE_TDD: Addition of EUTRA test case 8.1.3.12	10.0.0	10.1.0
2012-09	RAN#57	R5s120582	1285	-	LTE_TDD: Addition of EUTRA test case 8.2.4.15	10.0.0	10.1.0

Date	TSG #	TSG Doc.	CR	Rev	Subject/Comment	Old	New
2012-09	RAN#57	R5s120584	1286	-	Correction to EUTRA EMM testcase 9.2.3.3.5a	10.0.0	10.1.0
2012-09	RAN#57	R5s120585	1287	-	Correction to GCF WI-082 EMM testcases 9.2.3.1.10, 9.2.3.1.11, 9.2.3.1.12 and 9.2.3.1.16	10.0.0	10.1.0
2012-09	RAN#57	R5s120586	1288	-	Correction to Common IRAT NAS templates in LTE/SAE ATS	10.0.0	10.1.0
2012-09	RAN#57	R5s120587	1289	-	Correction to LTE<>GERAN test cases	10.0.0	10.1.0
2012-09	RAN#57	R5s120588	1290	-	LTE_TDD: Addition of GCF WI-097 EUTRA test case 6.2.3.19	10.0.0	10.1.0
2012-09	RAN#57	R5s120590	1291	-	LTE_TDD: Addition of GCF WI-097 EUTRA test case 6.2.3.20	10.0.0	10.1.0
2012-09	RAN#57	R5s120592	1292	-	LTE_TDD: Addition of GCF WI-097 Multilayer test case 13.1.7	10.0.0	10.1.0
2012-09	RAN#57	R5s120594	1293	-	LTE_TDD: Addition of GCF WI-097 Multilayer test case 13.1.8	10.0.0	10.1.0
2012-09	RAN#57	R5s120600	1294	-	Correction to GCF WI-087 EUTRA Multilayer testcase 13.1.9	10.0.0	10.1.0
2012-09	RAN#57	R5s120602	1295	-	Correction for GERAN cell selection parameters	10.0.0	10.1.0
2012-09	RAN#57	R5s120604	1296	-	Correction to GCF WI-086 EMM test case 9.2.3.3.3	10.0.0	10.1.0
2012-09	RAN#57	RP-121107	1297	-	CR to 36.523-3: Add new verified and e-mail agreed TTCN test cases in the TC lists in 36.523-3 (prose), Annex A	10.0.0	10.1.0
2012-12	RAN#58	R5-125091	1298	-	Correction to system information scheduling in section 7.7.2	10.1.0	10.2.0
2012-12	RAN#58	R5-125093	1299	-	Correction to delay after RRC CONN REL in section 7.18	10.1.0	10.2.0
2012-12	RAN#58	R5-125127	1300	-	Update guidelines for TC executions	10.1.0	10.2.0
2012-12	RAN#58	R5-125133	1301	-	New PIXIT to minimize loopback delay	10.1.0	10.2.0
2012-12	RAN#58	R5-125278	1302	-	Change of default value for px_RRC_CipheringAlgorithm	10.1.0	10.2.0
2012-12	RAN#58	R5-125755	1303	-	36523-3: Routine maintenance and updates	10.1.0	10.2.0
2012-12	RAN#58	R5s120597	1304	-	Correction to UT function for “UE Switch On” in LTE/SAE ATS	10.1.0	10.2.0
2012-12	RAN#58	R5s120611	1305	-	LTE_TDD: Addition of GCF WI-091 EUTRA Idle mode testcase 6.1.1.6	10.1.0	10.2.0
2012-12	RAN#58	R5s120613	1306	-	LTE_TDD: Addition of GCF WI-091 EUTRA RRC test case 8.3.3.1	10.1.0	10.2.0
2012-12	RAN#58	R5s120615	1307	-	Correction for GERAN initialisation functions	10.1.0	10.2.0
2012-12	RAN#58	R5s120617	1308	-	Addition of GCF WI-081 EUTRA Manual CSG Testcase 6.3.5	10.1.0	10.2.0
2012-12	RAN#58	R5s120619	1309	-	LTE_TDD: Addition of GCF WI-097 EMM testcase 9.2.3.2.13	10.1.0	10.2.0
2012-12	RAN#58	R5s120623	1310	-	Correction to EUTRA RRC test case 8.5.4.1	10.1.0	10.2.0
2012-12	RAN#58	R5s120628	1311	-	Correction to EMM test case 9.2.3.1.17	10.1.0	10.2.0
2012-12	RAN#58	R5s120629	1312	-	Correction to EUTRA MAC test case 7.1.3.9	10.1.0	10.2.0
2012-12	RAN#58	R5s120632	1313	-	LTE_TDD: Addition of GCF WI-092 EMM testcase 9.3.1.6	10.1.0	10.2.0
2012-12	RAN#58	R5s120634	1314	-	Correction to EUTRA MAC test case 7.1.6.1	10.1.0	10.2.0
2012-12	RAN#58	R5s120637	1315	-	Correction to EUTRA-GERAN Multi-Layer test cases 13.1.7, 13.1.8, 13.1.9 and 13.1.10	10.1.0	10.2.0
2012-12	RAN#58	R5s120638	1316	-	Correction to EUTRA-GERAN Idle Mode test case 6.2.3.17	10.1.0	10.2.0
2012-12	RAN#58	R5s120639	1317	-	Correction to EMM test case 9.2.3.3.5a	10.1.0	10.2.0
2012-12	RAN#58	R5s120641	1318	-	Correction to EUTRA test cases	10.1.0	10.2.0
2012-12	RAN#58	R5s120642	1319	-	Correction to function f_IPv4IPv6_IcmpEchoReply	10.1.0	10.2.0
2012-12	RAN#58	R5s120643	1320	-	LTE_TDD: Addition of GCF WI-097 EMM testcase 9.2.3.2.14	10.1.0	10.2.0
2012-12	RAN#58	R5s120647	1321	-	Addition of EUTRA test case 6.1.2.15b	10.1.0	10.2.0
2012-12	RAN#58	R5s120649	1322	-	Addition of GCF WI-086 EMM test case 9.2.3.2.1b	10.1.0	10.2.0

Date	TSG #	TSG Doc.	CR	Rev	Subject/Comment	Old	New
2012-12	RAN#58	R5s120651	1323	-	Addition of GCF WI-151 LTE FDD-TDD Inter-mode test case 6.1.1.3a	10.1.0	10.2.0
2012-12	RAN#58	R5s120653	1324	-	Addition of GCF WI-151 LTE FDD-TDD Inter-mode test case 8.1.3.11a	10.1.0	10.2.0
2012-12	RAN#58	R5s120655	1325	-	Addition of GCF WI-151 LTE FDD-TDD Inter-mode test case 8.2.4.10	10.1.0	10.2.0
2012-12	RAN#58	R5s120657	1326	-	Correction for GERAN PTC initialisation	10.1.0	10.2.0
2012-12	RAN#58	R5s120658	1327	-	Correction to EUTRA MAC test case 7.1.6.2	10.1.0	10.2.0
2012-12	RAN#58	R5s120659	1328	-	Correction to EUTRA InterRAT test function	10.1.0	10.2.0
2012-12	RAN#58	R5s120660	1329	-	Correction to EUTRA InterRAT Testcases	10.1.0	10.2.0
2012-12	RAN#58	R5s120661	1330	-	Addition of GCF WI-151 LTE FDD-TDD Inter-mode test case 6.1.1.1a	10.1.0	10.2.0
2012-12	RAN#58	R5s120663	1331	-	Addition of GCF WI-151 LTE FDD-TDD Inter-mode test case 13.4.1.3	10.1.0	10.2.0
2012-12	RAN#58	R5s120666	1332	-	Correction to Selection Expressions in LTE/SAE ATS	10.1.0	10.2.0
2012-12	RAN#58	R5s120667	1333	-	Correction to EUTRA MAC Testcase 7.1.3.9	10.1.0	10.2.0
2012-12	RAN#58	R5s120668	1334	-	Correction to EUTRA GCF WI-086 Multilayer Testcase 13.1.3	10.1.0	10.2.0
2012-12	RAN#58	R5s120669	1335	-	Correction to EUTRA GCF WI-086 EMM Testcase 9.2.1.2.1b	10.1.0	10.2.0
2012-12	RAN#58	R5s120670	1336	-	Correction to EUTRA Idle Mode test case 6.2.3.15	10.1.0	10.2.0
2012-12	RAN#58	R5s120671	1337	-	Correction to EUTRA GCF WI-086 RRC Testcase 8.4.1.5	10.1.0	10.2.0
2012-12	RAN#58	R5s120672	1338	-	Correction to Multilayer test case 13.4.2.4	10.1.0	10.2.0
2012-12	RAN#58	R5s120673	1339	-	Correction to f_UTRAN_CS_Fallback_WithHandover function	10.1.0	10.2.0
2012-12	RAN#58	R5s120675	1340	-	Addition of Rel 9 EUTRA RRC Interband Testcase 8.3.1.12	10.1.0	10.2.0
2012-12	RAN#58	R5s120677	1341	-	Addition of Rel 9 EUTRA RRC Interband Testcase 8.3.1.14	10.1.0	10.2.0
2012-12	RAN#58	R5s120679	1342	-	Addition of Rel 9 EUTRA RRC Interband Testcase 13.4.1.4	10.1.0	10.2.0
2012-12	RAN#58	R5s120681	1343	-	Addition of Rel 9 EUTRA RRC Interband Testcase 8.3.1.15	10.1.0	10.2.0
2012-12	RAN#58	R5s120683	1344	-	Correction to EUTRA EMM Testcase 9.2.3.1.23 and 9.2.3.2.3	10.1.0	10.2.0
2012-12	RAN#58	R5s120684	1345	-	Correction to GCF WI-081 EUTRA CSG Testcase 6.3.5	10.1.0	10.2.0
2012-12	RAN#58	R5s120685	1346	-	Correction to Idle ModeTest Cases 6.1.1.3, 6.1.1.3b and 6.2.1.4.	10.1.0	10.2.0
2012-12	RAN#58	R5s120686	1347	-	Correction to GCF WI-086 UTRA<>EUTRA RRC Testcases 8.4.2.2 & 8.4.2.4	10.1.0	10.2.0
2012-12	RAN#58	R5s120688	1348	-	Correction to GCF WI-086 EUTRA EMM Testcase 9.2.3.3.2	10.1.0	10.2.0
2012-12	RAN#58	R5s120689	1349	-	LTE_TDD: Addition of GCF WI-097 EUTRA RRC Testcase 8.4.3.2	10.1.0	10.2.0
2012-12	RAN#58	R5s120693	1350	-	Addition of GCF WI-151 LTE FDD-TDD Inter-mode test case 8.2.4.13a	10.1.0	10.2.0
2012-12	RAN#58	R5s120695	1351	-	Corrections to Eutra EMM Test case 9.2.3.4.1	10.1.0	10.2.0
2012-12	RAN#58	R5s120696	1352	-	Corrections to EUTRA EMM Test case 9.2.3.1.16	10.1.0	10.2.0
2012-12	RAN#58	R5s120697	1353	-	Correction to GCF WI-086 EMM test case 9.2.3.3.3	10.1.0	10.2.0
2012-12	RAN#58	R5s120698	1354	-	Corrections to EMM test case 9.2.1.1.7a	10.1.0	10.2.0
2012-12	RAN#58	R5s120699	1355	-	Corrections to Multi-layer test case 13.1.9	10.1.0	10.2.0
2012-12	RAN#58	R5s120700	1356	-	Addition of Rel-9 LTE Multi-layer Procedures test case 13.3.1.3	10.1.0	10.2.0
2012-12	RAN#58	R5s120702	1357	-	Correction to EUTRA EMM Testcase 9.2.3.2.3	10.1.0	10.2.0
2012-12	RAN#58	R5s120703	1358	-	Corrections to EMM test case 9.2.3.3..4	10.1.0	10.2.0
2012-12	RAN#58	R5s120704	1359	-	Addition of Rel 9 EUTRA RRC Interband Testcase 8.3.1.13	10.1.0	10.2.0

Date	TSG #	TSG Doc.	CR	Rev	Subject/Comment	Old	New
2012-12	RAN#58	R5s120706	1360	-	Corrections to EUTRA RRC test case 8.5.4.1	10.1.0	10.2.0
2012-12	RAN#58	R5s120707	1361	-	Corrections to EUTRA EMM test case 9.2.3.3.1	10.1.0	10.2.0
2012-12	RAN#58	R5s120708	1362	-	Corrections to EUTRA Idle Mode Test case 6.2.3.19	10.1.0	10.2.0
2012-12	RAN#58	R5s120709	1363	-	Addition of Rel-9 LTE Multi-layer Procedures test case 13.4.1.5	10.1.0	10.2.0
2012-12	RAN#58	R5s120711	1364	-	Correction to GCF WI-086 EUTRA EMM Testcase 9.2.3.3.4.	10.1.0	10.2.0
2012-12	RAN#58	R5s120713	1365	-	Addition of GCF WI-151 EUTRA FDD-TDD Testcase 8.3.1.12a	10.1.0	10.2.0
2012-12	RAN#58	R5s120715	1366	-	Corrections to EMM test case 9.2.3.3.5a	10.1.0	10.2.0
2012-12	RAN#58	R5s120719	1367	-	Correction to UTRAN functions	10.1.0	10.2.0
2012-12	RAN#58	R5s120720	1368	-	Corrections to function f_EUTRA_RmvFbdnPLMN function	10.1.0	10.2.0
2012-12	RAN#58	R5s120721	1369	-	Corrections to EMM test case 9.2.2.1.3	10.1.0	10.2.0
2012-12	RAN#58	R5s120722	1370	-	Addition of GCF WI-151 LTE FDD-TDD Inter-mode test case 8.3.1.14a	10.1.0	10.2.0
2012-12	RAN#58	R5s120724	1371	-	Correction to EMM test case 9.2.1.2.15	10.1.0	10.2.0
2012-12	RAN#58	R5s120725	1372	-	Addition of GCF WI-151 LTE FDD-TDD Inter-mode test case 8.3.1.13a	10.1.0	10.2.0
2012-12	RAN#58	R5s120727	1373	-	Corrections to IMS procedures in LTE test suite	10.1.0	10.2.0
2012-12	RAN#58	R5s120728	1374	-	Correction to EUTRA EMM test case 9.2.3.3.5	10.1.0	10.2.0
2012-12	RAN#58	R5s120738	1375	-	LTE_TDD: Addition of GCF WI-096 Idle Mode test case 6.2.1.2	10.1.0	10.2.0
2012-12	RAN#58	R5s120740	1376	-	LTE_TDD: Addition of GCF WI-096 Idle Mode test case 6.2.2.1	10.1.0	10.2.0
2012-12	RAN#58	R5s120742	1377	-	LTE_TDD: Addition of GCF WI-096 Idle Mode test case 6.2.2.8	10.1.0	10.2.0
2012-12	RAN#58	R5s120744	1378	-	LTE_TDD: Addition of GCF WI-096 Idle Mode test case 6.2.3.3	10.1.0	10.2.0
2012-12	RAN#58	R5s120746	1379	-	LTE_TDD: Addition of GCF WI-096 Idle Mode test case 6.2.3.5	10.1.0	10.2.0
2012-12	RAN#58	R5s120748	1380	-	LTE_TDD: Addition of GCF WI-096 Idle Mode test case 6.2.3.6	10.1.0	10.2.0
2012-12	RAN#58	R5s120750	1381	-	LTE_TDD: Addition of GCF WI-096 Idle Mode test case 6.2.3.13	10.1.0	10.2.0
2012-12	RAN#58	R5s120752	1382	-	LTE_TDD: Addition of GCF WI-096 Idle Mode test case 6.2.3.31	10.1.0	10.2.0
2012-12	RAN#58	R5s120754	1383	-	LTE_TDD: Addition of GCF WI-096 Idle Mode test case 6.2.3.32	10.1.0	10.2.0
2012-12	RAN#58	R5s120756	1384	-	LTE_TDD: Addition of GCF WI-096 RRC test case 8.1.3.6	10.1.0	10.2.0
2012-12	RAN#58	R5s120758	1385	-	LTE_TDD: Addition of GCF WI-096 RRC test case 8.5.2.1	10.1.0	10.2.0
2012-12	RAN#58	R5s120760	1386	-	LTE_TDD: Addition of GCF WI-096 EMM test case 9.2.1.2.1b	10.1.0	10.2.0
2012-12	RAN#58	R5s120762	1387	-	LTE_TDD: Addition of GCF WI-096 EMM test case 9.2.2.1.10	10.1.0	10.2.0
2012-12	RAN#58	R5s120764	1388	-	LTE_TDD: Addition of GCF WI-096 EMM test case 9.2.3.3.3	10.1.0	10.2.0
2012-12	RAN#58	R5s120768	1389	-	Corrections to Multi-layer test cases 13.1.7,13.1.8,13.1.9,13.1.10	10.1.0	10.2.0
2012-12	RAN#58	R5s120769	1390	-	Correction to fl_EUTRA_RRC_Procedure_Latency function	10.1.0	10.2.0
2012-12	RAN#58	R5s120770	1391	-	Correction to GCF WI-086 EUTRA<>UTRA Testcases 6.2.1.3 and 8.3.3.2	10.1.0	10.2.0
2012-12	RAN#58	R5s120771	1392	-	Correction to GCF WI-082 EUTRA Multilayer Testcase 13.3.1.2	10.1.0	10.2.0
2012-12	RAN#58	R5s120772	1393	-	Addition of Rel 9 GCF WI-151 EUTRA RRC Testcase 6.1.2.16	10.1.0	10.2.0
2012-12	RAN#58	R5s120774	1394	-	Addition of GCF WI-087 Multi layer test case 13.4.2.5	10.1.0	10.2.0
2012-12	RAN#58	R5s120776	1395	-	Addition of Rel-9 EUTRA-UTRAN RRC test case 8.1.3.6a	10.1.0	10.2.0
2012-12	RAN#58	R5s120778	1396	-	Correction to GCF WI-086 E-UTRA to UTRAN RRC test case 8.4.1.5	10.1.0	10.2.0

Date	TSG #	TSG Doc.	CR	Rev	Subject/Comment	Old	New
2012-12	RAN#58	R5s120779	1397	-	LTE_TDD : Addition of Rel9 EUTRA Multilayer Testcase 13.3.1.3	10.1.0	10.2.0
2012-12	RAN#58	R5s120781	1398	-	LTE_TDD : Addition of Rel9 EUTRA Multilayer Testcase 13.4.1.5	10.1.0	10.2.0
2012-12	RAN#58	R5s120783	1399	-	Addition of Rel 9 RSRQ Idle Mode Testcase 6.1.2.2a	10.1.0	10.2.0
2012-12	RAN#58	R5s120785	1400	-	Addition of GCF WI-151 EUTRA FDD-TDD Intermode Testcase 6.1.2.15a	10.1.0	10.2.0
2012-12	RAN#58	R5s120787	1401	-	Correction to EMM Test Case 9.2.1.2.1d	10.1.0	10.2.0
2012-12	RAN#58	R5s120788	1402	-	Correction to GCF WI-086 EUTRA EMM Testcase 9.2.1.2.1d	10.1.0	10.2.0
2012-12	RAN#58	R5s120789	1403	-	Correction to EUTRA Idle Mode Testcase 6.1.2.9a	10.1.0	10.2.0
2012-12	RAN#58	R5s120790	1404	-	Correction to GCF WI-086 EMM test case 9.2.3.3.2	10.1.0	10.2.0
2012-12	RAN#58	R5s120791	1405	-	Corrections to EUTRA Idle Mode Test Cases	10.1.0	10.2.0
2012-12	RAN#58	R5s120793	1406	-	Correction to GCF WI-087 LTE<>GERAN Testcase 6.2.3.24	10.1.0	10.2.0
2012-12	RAN#58	R5s120797	1407	-	LTE_TDD: Addition of GCF WI-096 Idle Mode test case 6.2.3.6	10.1.0	10.2.0
2012-12	RAN#58	R5s120799	1408	-	Correction to f_UTRAN_LocationUpdate_WithoutLAUReq function	10.1.0	10.2.0
2012-12	RAN#58	R5s120800	1409	-	Correction to ESM test cases 10.8.5 and 10.8.6	10.1.0	10.2.0
2012-12	RAN#58	R5s120801	1410	-	Correction to Idle Mode test case 6.2.2.2	10.1.0	10.2.0
2012-12	RAN#58	R5s120802	1411	-	Correction to GERAN XID procedure	10.1.0	10.2.0
2012-12	RAN#58	R5s120808	1412	-	Addition of Rel9 EUTRA RRC test case 8.5.1.6	10.1.0	10.2.0
2012-12	RAN#58	R5s120810	1413	-	Corrections to EUTRA RRC test case 8.5.4.1	10.1.0	10.2.0
2012-12	RAN#58	R5s120811	1414	-	Correction to Idle Mode test case 6.2.1.1	10.1.0	10.2.0
2012-12	RAN#58	R5s120812	1415	-	Addition of GCF WI-151 EUTRA FDD-TDD Inter-mode test case 8.2.4.14a.	10.1.0	10.2.0
2012-12	RAN#58	R5s120815	1416	-	Correction to EUTRA Idle Mode Test Case 6.2.1.4	10.1.0	10.2.0
2012-12	RAN#58	R5s120817	1417	-	Addition of GCF WI-151 EUTRA FDD-TDD Inter-mode test case 8.2.4.15a.	10.1.0	10.2.0
2012-12	RAN#58	R5s120819	1418	-	Correction to f_UTRAN_CS_Fallback_WithHandover function	10.1.0	10.2.0
2012-12	RAN#58	R5s120820	1419	-	Correction to EUTRA Multi Layer test case 13.3.2.2	10.1.0	10.2.0
2012-12	RAN#58	R5s120821	1420	-	Correction to f_GetTestcaseAttrib_Eutra_Release function	10.1.0	10.2.0
2012-12	RAN#58	R5s120822	1421	-	Correction to GCF WI-081 MAC test cases 7.1.7.1.x and 7.1.7.2.1 for Band 18.	10.1.0	10.2.0
2012-12	RAN#58	R5s120823	1422	-	Correction to GCF WI-086 EUTRA RRC Testcase 8.4.1.5	10.1.0	10.2.0
2012-12	RAN#58	R5s120824	1423	-	Correction to GCF WI-087 EUTRA RRC Testcase 9.2.1.2.1b	10.1.0	10.2.0
2012-12	RAN#58	R5s120825	1424	-	Correction to GCF WI-086 EUTRA EMM Testcase 9.2.3.2.1b	10.1.0	10.2.0
2012-12	RAN#58	R5s120826	1425	-	Correction to Rel9 EUTRA Multilayer Testcase 13.3.1.3	10.1.0	10.2.0
2012-12	RAN#58	R5s120827	1426	-	Addition of Rel9 EUTRA RRC Interband Testcase 8.3.1.16.	10.1.0	10.2.0
2012-12	RAN#58	R5s120829	1427	-	Correction to GCF WI-086 EUTRA EMM Testcase 9.2.1.2.1c	10.1.0	10.2.0
2012-12	RAN#58	R5s120831	1428	-	Correction to GCF WI-086 EUTRA EMM Testcase 9.2.3.2.1c	10.1.0	10.2.0
2012-12	RAN#58	R5s120832	1429	-	Correction to GCF WI-082 EUTRA CSG Testcase 6.3.5	10.1.0	10.2.0
2012-12	RAN#58	R5s120833	1430	-	Correction to GCF WI-087 EUTRA EMM Testcase 9.2.1.2.13	10.1.0	10.2.0
2012-12	RAN#58	R5s120834	1431	-	Correction to GCF WI-086 EUTRA EMM Testcase 9.2.3.2.1b	10.1.0	10.2.0
2012-12	RAN#58	R5s120835	1432	-	Correction to GCF WI-087 EUTRA EMM Testcases 9.2.3.2.3, 9.2.1.2.1b, 9.2.3.2.1b	10.1.0	10.2.0
2012-12	RAN#58	R5s120836	1433	-	Correction to Rel 9 GCF WI-151 EUTRA RRC Testcase 6.1.2.15a	10.1.0	10.2.0

Date	TSG #	TSG Doc.	CR	Rev	Subject/Comment	Old	New
2012-12	RAN#58	R5s120837	1434	-	Correction to GCF WI-087 EUTRA EMM Testcase 9.2.3.4.1	10.1.0	10.2.0
2012-12	RAN#58	R5s120838	1435	-	Correction to GCF WI-087 EUTRA EMM Testcase 9.2.3.1.6	10.1.0	10.2.0
2012-12	RAN#58	R5s120839	1436	-	Correction to Rel9 EUTRA Hybrid Cell Testcase 6.4.1	10.1.0	10.2.0
2012-12	RAN#58	R5s120841	1437	-	Correction to Rel 9 GCF WI-151 EUTRA RRC Testcase 6.1.1.3a	10.1.0	10.2.0
2012-12	RAN#58	R5s120842	1438	-	Correction to Testcase Release Applicability of Rel9 EUTRA Testcases.	10.1.0	10.2.0
2012-12	RAN#58	R5s120843	1439	-	LTE_TDD : Addition of Rel9 GCF WI-150 EUTRA RSRQ Idle Mode Testcase 6.1.2.2a	10.1.0	10.2.0
2012-12	RAN#58	RP-121670	1440	-	CR to 36.523-3: Add new verified and e-mail agreed TTCN test cases in the TC lists in 36.523-3 (prose), Annex A	10.1.0	10.2.0
2013-03	RAN#59	R5-130670	1441	-	36523-3: Routine maintenance and updates	10.2.0	10.3.0
2013-03	RAN#59	R5-130693	1442	-	36523-3: Introduce CA test model and ASP	10.2.0	10.3.0
2013-03	RAN#59	R5s120830	1443	-	Correction to GCF WI-087 EUTRA EMM testcase 9.2.3.3.5	10.2.0	10.3.0
2013-03	RAN#59	R5s120849	1444	-	Correction to f_UTRAN_CellInfo_SetMultiplePLMNIdentities	10.2.0	10.3.0
2013-03	RAN#59	R5s120852	1445	-	Corrections to Redirection Test Cases	10.2.0	10.3.0
2013-03	RAN#59	R5s120853	1446	-	Correction to EUTRA Idle Mode Test Case 6.2.3.13	10.2.0	10.3.0
2013-03	RAN#59	R5s120854	1447	-	LTE_TDD : Addition of Rel9 EUTRA Interband Testcase 8.3.1.12	10.2.0	10.3.0
2013-03	RAN#59	R5s120856	1448	-	LTE_TDD : Addition of Rel9 EUTRA Interband Testcase 8.3.1.14	10.2.0	10.3.0
2013-03	RAN#59	R5s120860	1449	-	Corrections to Rel9 EUTRA RRC Test case 8.3.1.16	10.2.0	10.3.0
2013-03	RAN#59	R5s120861	1450	-	Correction to GCF WI-87 EUTRA Multilayer Testcase 13.3.2.2	10.2.0	10.3.0
2013-03	RAN#59	R5s120862	1451	-	LTE_TDD : Addition of Rel9 EUTRA Interband Testcase 8.3.1.15	10.2.0	10.3.0
2013-03	RAN#59	R5s120864	1452	-	LTE_TDD : Addition of Rel9 EUTRA RRC Testcase 8.5.1.6	10.2.0	10.3.0
2013-03	RAN#59	R5s120866	1453	-	Correction to GCF WI-87 EUTRA EMM Testcase 9.2.3.3.5a	10.2.0	10.3.0
2013-03	RAN#59	R5s120867	1454	-	Corrections to EUTRA EMM Test cases	10.2.0	10.3.0
2013-03	RAN#59	R5s120868	1455	-	Correction to EUTRA WI-086 Multilayer Testcase 13.1.3	10.2.0	10.3.0
2013-03	RAN#59	R5s120869	1456	-	Correction to EUTRA RRC Test Case 8.3.1.11a	10.2.0	10.3.0
2013-03	RAN#59	R5s120870	1457	-	Correction to EUTRA RRC Test Cases 8.2.4.15 and 8.2.4.15a	10.2.0	10.3.0
2013-03	RAN#59	R5s120871	1458	-	LTE_TDD: Correction to UTRA-TDD RRC RAB Template	10.2.0	10.3.0
2013-03	RAN#59	R5s120872	1459	-	LTE_TDD: Correction to GCF WI-086 EUTRA EMM Testcase 9.2.1.2.5,9.2.1.2.6 and 9.2.1.2.7	10.2.0	10.3.0
2013-03	RAN#59	R5s120873	1460	-	LTE_TDD: Correction to GCF WI-096 EUTRA EMM Testcase 9.2.1.2.15	10.2.0	10.3.0
2013-03	RAN#59	R5s120876	1461	-	Correction to EUTRA Idle Mode Test Case 6.1.1.3a	10.2.0	10.3.0
2013-03	RAN#59	R5s120878	1462	-	Correction to EMM test case 9.2.3.2.3	10.2.0	10.3.0
2013-03	RAN#59	R5s120879	1463	-	Addition of GCF WI-150 Rel-9 EUTRA RSRQ test case 6.1.2.3a	10.2.0	10.3.0
2013-03	RAN#59	R5s120883	1464	-	Addition of GCF WI-150 Rel9 RSRQ Idle Mode Testcase 6.1.2.17	10.2.0	10.3.0
2013-03	RAN#59	R5s120885	1465	-	Correction to GCF WI-82 EUTRA EMM Testcase 9.2.1.1.23	10.2.0	10.3.0
2013-03	RAN#59	R5s120886	1466	-	Correction to GCF WI-82 EUTRA EMM Testcase 9.2.2.1.6	10.2.0	10.3.0
2013-03	RAN#59	R5s120888	1467	-	Correction to GCF WI-82 EUTRA EMM Testcase 9.2.1.1.24	10.2.0	10.3.0
2013-03	RAN#59	R5s120889	1468	-	Correction to GCF WI-87 EUTRA EMM Testcase 9.2.1.2.15	10.2.0	10.3.0
2013-03	RAN#59	R5s120890	1469	-	Correction to declarations based on XSD types in LTE Test Suite.	10.2.0	10.3.0
2013-03	RAN#59	R5s120891	1470	-	Addition of GCF WI-159 Rel-9 LTE Pre-registration at 1xRTT test case 13.4.4.1	10.2.0	10.3.0

Date	TSG #	TSG Doc.	CR	Rev	Subject/Comment	Old	New
2013-03	RAN#59	R5s120893	1471	-	Correction to EMM Test Cases 9.2.1.1.12, 9.2.3.1.12 and 9.2.3.1.18	10.2.0	10.3.0
2013-03	RAN#59	R5s120894	1472	-	Correction to GCF WI-87 EUTRA EMM Testcase 9.2.3.1.6	10.2.0	10.3.0
2013-03	RAN#59	R5s120895	1473	-	Correction to GCF WI-81 EUTRA Idle Mode Testcase 6.1.2.9a	10.2.0	10.3.0
2013-03	RAN#59	R5s120896	1474	-	Correction to GCF WI-82 EUTRA EMM Testcase 9.2.3.1.27	10.2.0	10.3.0
2013-03	RAN#59	R5s120897	1475	-	Correction to GCF WI-86 EUTRA EMM Testcase 9.2.3.2.1c	10.2.0	10.3.0
2013-03	RAN#59	R5s120898	1476	-	Addition of GCF WI-159 Rel-9 LTE Pre-registration at 1xRTT test case 13.4.4.5	10.2.0	10.3.0
2013-03	RAN#59	R5s120900	1477	-	Correction to GCF WI-86 EUTRA EMM Testcase 9.2.3.2.1a	10.2.0	10.3.0
2013-03	RAN#59	R5s120901	1478	-	Correction to GCF WI-82 EUTRA EMM Testcase 9.2.1.2.3	10.2.0	10.3.0
2013-03	RAN#59	R5s120902	1479	-	Correction to EMM test case 9.2.2.1.3	10.2.0	10.3.0
2013-03	RAN#59	R5s120903	1480	-	Correction to SNDCP Ports in LTE<>GERAN	10.2.0	10.3.0
2013-03	RAN#59	R5s120904	1481	-	Correction to EUTRA<> UTRA Testcases	10.2.0	10.3.0
2013-03	RAN#59	R5s120905	1482	-	Addition of GCF WI-150 Rel-9 EUTRA RSRQ test case 6.1.2.18	10.2.0	10.3.0
2013-03	RAN#59	R5s120908	1483	-	Correction to EUTRA RRC test cases 8.4.3.2 and 8.4.3.3	10.2.0	10.3.0
2013-03	RAN#59	R5s120909	1484	-	Correction to EUTRA Idle Mode test case 6.2.3.31	10.2.0	10.3.0
2013-03	RAN#59	R5s120910	1485	-	Correction to GCF WI-081 EUTRA MAC Testcase 7.1.2.3	10.2.0	10.3.0
2013-03	RAN#59	R5s120911	1486	-	Correction to GCF WI-081 EUTRA RRC Testcase 8.1.2.6	10.2.0	10.3.0
2013-03	RAN#59	R5s120912	1487	-	Correction to GCF WI-156 EUTRA Interband Testcase 8.2.4.14	10.2.0	10.3.0
2013-03	RAN#59	R5s120913	1488	-	Addition of GCF WI-088 LTE-1xRTT test case 8.3.2.10	10.2.0	10.3.0
2013-03	RAN#59	R5s120915	1489	-	Addition of GCF WI-088 LTE-HRPD test case 8.3.2.8	10.2.0	10.3.0
2013-03	RAN#59	R5s120917	1490	-	Correction to EUTRA EMM Test case 9.2.3.2.12	10.2.0	10.3.0
2013-03	RAN#59	R5s120918	1491	-	Correction to GCF WI-87 EUTRA EMM Testcase 9.2.3.3.5	10.2.0	10.3.0
2013-03	RAN#59	R5s120919	1492	-	Correction to GCF WI-87 EUTRA Multilayer testcase 13.3.2.2	10.2.0	10.3.0
2013-03	RAN#59	R5s120920	1493	-	Correction to GCF WI-087 LTE<>GERAN Testcase 13.4.2.5	10.2.0	10.3.0
2013-03	RAN#59	R5s120921	1494	-	Correction to EUTRA RRC Test Case 8.2.4.15a	10.2.0	10.3.0
2013-03	RAN#59	R5s120922	1495	-	Correction to EMM test case 9.2.3.3.2	10.2.0	10.3.0
2013-03	RAN#59	R5s120923	1496	-	Correction to EMM test case 9.2.1.2.1c	10.2.0	10.3.0
2013-03	RAN#59	R5s120925	1497	-	Addition of GCF WI-150 Rel-9 EUTRA RSRQ test case 8.3.1.3a	10.2.0	10.3.0
2013-03	RAN#59	R5s120933	1498	-	Correction to EMM Test Case 9.2.3.1.17	10.2.0	10.3.0
2013-03	RAN#59	R5s120935	1499	-	Correction to GCF WI-086 UTRA<>EUTRA RRC Testcases 8.4.2.2 and 8.4.2.4	10.2.0	10.3.0
2013-03	RAN#59	R5s120937	1500	-	Correction to EUTRA RRC test case 8.1.3.7	10.2.0	10.3.0
2013-03	RAN#59	R5s120938	1501	-	Correction to EUTRA Idle Mode test case 6.2.3.3	10.2.0	10.3.0
2013-03	RAN#59	R5s120939	1502	-	Addition of GCF WI-087 EUTRA Idle Mode test case 6.2.3.23	10.2.0	10.3.0
2013-03	RAN#59	R5s120941	1503	-	Correction to EUTRA RRC test cases 8.4.2.2 and 8.4.2.4	10.2.0	10.3.0
2013-03	RAN#59	R5s120942	1504	-	Correction to GCF WI-086 EUTRA EMM testcase 9.2.3.2.13	10.2.0	10.3.0
2013-03	RAN#59	R5s120943	1505	-	Correction to function f_EUTRA_TrackingAreaUpdateFromAnotherRAT_WithoutRRCConneReq	10.2.0	10.3.0
2013-03	RAN#59	R5s120944	1506	-	Correction to f_EUTRA_TrackingAreaUpdateFromAnotherRAT_WithoutRRCConneReq	10.2.0	10.3.0

Date	TSG #	TSG Doc.	CR	Rev	Subject/Comment	Old	New
2013-03	RAN#59	R5s120951	1507	-	LTE_TDD: Correction to RAU procedure of UTRA	10.2.0	10.3.0
2013-03	RAN#59	R5s120952	1508	-	LTE_TDD : Correction to GCF WI-096 EUTRA Idle Mode Test Case 6.2.3.4	10.2.0	10.3.0
2013-03	RAN#59	R5s120953	1509	-	LTE_TDD: Correction to RLC CONFIG in CS12.2K Scenario of UTRA	10.2.0	10.3.0
2013-03	RAN#59	R5s120954	1510	-	LTE_TDD: Corrections to DL Common Information in RB SETUP message of UTRA	10.2.0	10.3.0
2013-03	RAN#59	R5s120955	1511	-	LTE_TDD: Corrections to Physical Channel Parameters used in PS64K Scenario of UTRA	10.2.0	10.3.0
2013-03	RAN#59	R5s120956	1512	-	LTE_TDD: Corrections to Physical Channel Parameters used in CS12.2K Scenario of UTRA	10.2.0	10.3.0
2013-03	RAN#59	R5s120958	1513	-	LTE_TDD: Addition of EUTRA Multi-layer Test case 13.1.9	10.2.0	10.3.0
2013-03	RAN#59	R5s120960	1514	-	LTE_TDD: Addition of EUTRA Multi-layer Test case 13.1.10	10.2.0	10.3.0
2013-03	RAN#59	R5s120963	1515	-	Correction to EUTRA EMM Testcases 9.2.1.2.11 and 9.2.1.2.12	10.2.0	10.3.0
2013-03	RAN#59	R5s120964	1516	-	Addition of EUTRA Idle mode Test case 6.2.3.5a	10.2.0	10.3.0
2013-03	RAN#59	R5s120967	1517	-	Corrections to EUTRA-GERAN test cases 6.2.3.1 and 9.2.3.4.1	10.2.0	10.3.0
2013-03	RAN#59	R5s120968	1518	-	Correction to EMM test case 9.2.3.2.3 in Voice-Centric Mode in EUTRA-UTRAN path	10.2.0	10.3.0
2013-03	RAN#59	R5s130000	1519	-	Correction to EMM test case 9.2.2.1.10	10.2.0	10.3.0
2013-03	RAN#59	R5s130002	1520	-	LTE_TDD: Addition of EUTRA Idle Mode Test Case 6.2.3.4	10.2.0	10.3.0
2013-03	RAN#59	R5s130004	1521	-	LTE_TDD: Addition of EMM Test Case 9.2.3.2.1a	10.2.0	10.3.0
2013-03	RAN#59	R5s130006	1522	-	LTE_TDD: Addition of EMM Test Case 9.2.3.3.6	10.2.0	10.3.0
2013-03	RAN#59	R5s130008	1523	-	Correction to SIB5 definition for UTRAN-TDD (1.28 Mcps)	10.2.0	10.3.0
2013-03	RAN#59	R5s130009	1524	-	Correction to template cds_RadioBearerSetup_r9_IEs_64k_PS_TDD	10.2.0	10.3.0
2013-03	RAN#59	R5s130010	1525	-	Correction to EUTRA RRC Test Case 8.4.2.2	10.2.0	10.3.0
2013-03	RAN#59	R5s130013	1526	-	LTE_TDD: Addition of GCF WI-097 EMM test case 9.2.3.2.1b	10.2.0	10.3.0
2013-03	RAN#59	R5s130017	1527	-	LTE_TDD: Addition of GCF WI-150 Rel-9 EUTRA RSRQ test case 6.1.2.18	10.2.0	10.3.0
2013-03	RAN#59	R5s130019	1528	-	Correction to EUTRA RRC Test Case 8.4.3.3	10.2.0	10.3.0
2013-03	RAN#59	R5s130020	1529	-	Addition of Rel9 RSRQ Idle Mode Testcase 6.2.3.4a	10.2.0	10.3.0
2013-03	RAN#59	R5s130022	1530	-	LTE_TDD: Addition of GCF WI-150 Rel-9 EUTRA RSRQ test case 6.1.2.17	10.2.0	10.3.0
2013-03	RAN#59	R5s130024	1531	-	LTE_TDD : Addition of Rel9 EUTRA RSRQ Testcase 8.3.1.3a	10.2.0	10.3.0
2013-03	RAN#59	R5s130026	1532	-	LTE_TDD: Addition of GCF WI-150 Rel-9 EUTRA RSRQ test case 6.1.2.3a	10.2.0	10.3.0
2013-03	RAN#59	R5s130034	1533	-	Correction to EMM Test Case 9.2.3.2.9	10.2.0	10.3.0
2013-03	RAN#59	R5s130037	1534	-	Correction to EUTRA RRC test case 8.2.4.14a	10.2.0	10.3.0
2013-03	RAN#59	R5s130038	1535	-	Correction to f_RoutingTable_ChangeEutraCell function	10.2.0	10.3.0
2013-03	RAN#59	R5s130040	1536	-	Correction to EUTRA EMM Testcases 9.2.1.1.15, 9.2.1.1.15a, 9.2.1.1.16, 9.2.1.1.16a in Ipv6	10.2.0	10.3.0
2013-03	RAN#59	R5s130043	1537	-	LTE_TDD: Addition of GCF WI-097 EMM test case 9.2.3.2.3	10.2.0	10.3.0
2013-03	RAN#59	R5s130045	1538	-	Correction to EUTRA ICMP Echo Reply function	10.2.0	10.3.0
2013-03	RAN#59	R5s130046	1539	-	Correction to EMM test case 9.2.1.1.24	10.2.0	10.3.0
2013-03	RAN#59	R5s130050	1540	-	Correction to EUTRA-GERAN test cases 6.2.3.1 and 9.2.3.4.1	10.2.0	10.3.0
2013-03	RAN#59	R5s130051	1541	-	Correction to EUTRA RRC test case 8.3.2.9	10.2.0	10.3.0
2013-03	RAN#59	R5s130052	1542	-	Correction to Test case 8.1.3.7	10.2.0	10.3.0
2013-03	RAN#59	R5s130055	1543	-	Addition of GCF WI-151 LTE FDD-TDD Inter-mode test case 8.3.1.15a	10.2.0	10.3.0

Date	TSG #	TSG Doc.	CR	Rev	Subject/Comment	Old	New
2013-03	RAN#59	R5s130057	1544	-	Addition of GCF WI-088 LTE-1xRTT Inter-RAT test case 8.4.7.4	10.2.0	10.3.0
2013-03	RAN#59	R5s130060	1545	-	Correction to EUTRA-GERAN test case 6.2.3.1	10.2.0	10.3.0
2013-03	RAN#59	R5s130061	1546	-	Addition of Rel9 RSRQ Idle Mode Testcase 6.2.3.3a	10.2.0	10.3.0
2013-03	RAN#59	R5s130064	1547	-	Correction to f_EUTRA_Capability function	10.2.0	10.3.0
2013-03	RAN#59	R5s130067	1548	-	Correction to EMM test case 9.1.5.1	10.2.0	10.3.0
2013-03	RAN#59	R5s130068	1549	-	Correction to LTE FDD-TDD Intermode test case 8.2.4.14a	10.2.0	10.3.0
2013-03	RAN#59	R5s130069	1550	-	Correction to EUTRA Idle Mode test case 6.1.1.1	10.2.0	10.3.0
2013-03	RAN#59	R5s130076	1551	-	Correction to EUTRA Idle Mode Test Case 6.1.2.13	10.2.0	10.3.0
2013-03	RAN#59	R5s130077	1552	-	Correction to ESM Test Case 10.4.1	10.2.0	10.3.0
2013-03	RAN#59	R5s130083	1553	-	Correction to Test case 9.2.1.2.1c	10.2.0	10.3.0
2013-03	RAN#59	R5s130084	1554	-	Addition of Rel9 EUTRA<>UTRA RSRQ RRC Testcase 8.3.2.3a	10.2.0	10.3.0
2013-03	RAN#59	R5s130088	1555	-	Correction to EUTRA RRC Test Case 8.5.4.1	10.2.0	10.3.0
2013-03	RAN#59	RP-130151	1556	-	CR to 36.523-3: Add new verified and e-mail agreed TTCN test cases in the TC lists in 36.523-3 (prose), Annex A	10.2.0	10.3.0
2013-06	RAN#60	R5-131868	1561	-	Addition of IMS de-registration procedures to postamble sequences for E-UTRA test cases	10.3.0	10.4.0
2013-06	RAN#60	RP-130618	1678	-	CR to 36.523-3: Add new verified and e-mail agreed TTCN test cases in the TC lists in 36.523-3 (prose), Annex A	10.3.0	10.4.0
2013-06	RAN#60	R5s130050	1563	-	Correction to EUTRA-GERAN test cases 6.2.3.1 and 9.2.3.4.1	10.3.0	10.4.0
2013-06	RAN#60	R5s130065	1564	-	Addition of GCF WI-151 LTE FDD-TDD Inter-mode test case 8.3.1.16a	10.3.0	10.4.0
2013-06	RAN#60	R5s130078	1565	-	Addition of Rel 9 EUTRA PWS Test cases 18.1.2	10.3.0	10.4.0
2013-06	RAN#60	R5s130081	1566	-	Addition of Rel-9 EUTRA PWS test case 18.1.1	10.3.0	10.4.0
2013-06	RAN#60	R5s130086	1567	-	LTE_TDD: Addition of GCF WI-099 Multi-RAT test case 6.2.1.1	10.3.0	10.4.0
2013-06	RAN#60	R5s130089	1568	-	Correction to EUTRA Multi-Layer Test Cases 13.1.x	10.3.0	10.4.0
2013-06	RAN#60	R5s130090	1569	-	Addition of GCF WI-159 LTE-1xRTT CSFB Handover test case 8.4.7.9	10.3.0	10.4.0
2013-06	RAN#60	R5s130092	1570	-	Correction to EMM Test Case 9.2.1.1.20	10.3.0	10.4.0
2013-06	RAN#60	R5s130094	1571	-	LTE_TDD: Addition of EMM Test Case 9.2.3.1.6	10.3.0	10.4.0
2013-06	RAN#60	R5s130097	1572	-	Addition of GCF WI-088 LTE-1xRTT CSFB Emergency Call test case 13.1.17	10.3.0	10.4.0
2013-06	RAN#60	R5s130100	1573	-	Correction to E-UTRA EMM testcases 9.2.1.1.7a, 9.2.3.1.16, 9.2.3.1.18 , 9.2.3.1.18a, 9.2.3.2.10 and 9.2.3.2.2	10.3.0	10.4.0
2013-06	RAN#60	R5s130103	1574	-	Addition of Rel 9 EUTRA PWS(CMAS) Test cases 18.1.3	10.3.0	10.4.0
2013-06	RAN#60	R5s130105	1575	-	Addition of GCF WI-088 LTE-1xRTT CSFB test case 8.4.7.3	10.3.0	10.4.0
2013-06	RAN#60	R5s130107	1576	-	Correction to handling of security capabilities in EUTRA Testcases	10.3.0	10.4.0
2013-06	RAN#60	R5s130110	1577	-	LTE_TDD: Addition of GCF WI-099 Multi-RAT test case 8.3.2.6	10.3.0	10.4.0
2013-06	RAN#60	R5s130112	1578	-	Correction to EUTRA Idle Mode Test Case 6.1.1.3a	10.3.0	10.4.0
2013-06	RAN#60	R5s130113	1579	-	Correction to 36.523 IMS preamble part with IPsec enabled	10.3.0	10.4.0
2013-06	RAN#60	R5s130116	1580	-	Correction to Security Procedure for EUTRA TDD<>TDSDMA Testcases	10.3.0	10.4.0
2013-06	RAN#60	R5s130117	1581	-	Correction to EUTRA EMM Test Case 9.2.1.2.3	10.3.0	10.4.0
2013-06	RAN#60	R5s130122	1582	-	Corrections to ESM test cases 10.3.1 and 10.9.1	10.3.0	10.4.0
2013-06	RAN#60	R5s130127	1583	-	Addition of GCF WI-151 LTE FDD-TDD Inter-mode test case 6.1.1.4a	10.3.0	10.4.0
2013-06	RAN#60	R5s130129	1584	-	Correction to EUTRA RRC Test Case 8.3.2.2	10.3.0	10.4.0

Date	TSG #	TSG Doc.	CR	Rev	Subject/Comment	Old	New
2013-06	RAN#60	R5s130131	1585	-	Correction to EMM Test Case 9.2.3.1.19	10.3.0	10.4.0
2013-06	RAN#60	R5s130132	1586	-	Correction to px_CipherAlg PIXIT type	10.3.0	10.4.0
2013-06	RAN#60	R5s130135	1587	-	Clarification for modifies of 'record of' record in TTCN3 core language	10.3.0	10.4.0
2013-06	RAN#60	R5s130137	1588	-	Correction to GCF WI-086 EUTRA Multilayer Testcase 13.1.5	10.3.0	10.4.0
2013-06	RAN#60	R5s130138	1589	-	Correction to Idle Mode Test Case 6.1.2.17	10.3.0	10.4.0
2013-06	RAN#60	R5s130140	1590	-	Correction to EUTRA RRC Test Case 8.2.4.14a	10.3.0	10.4.0
2013-06	RAN#60	R5s130141	1591	-	Correction to EUTRA RRC Test Case 8.3.1.16a	10.3.0	10.4.0
2013-06	RAN#60	R5s130142	1592	-	Correction to EUTRA RRC Test Case 8.4.2.2	10.3.0	10.4.0
2013-06	RAN#60	R5s130143	1593	-	Correction to GCF WI-082 testcase 9.3.1.6 (LTE-UTRA)	10.3.0	10.4.0
2013-06	RAN#60	R5s130144	1594	-	Correction to GCF WI-086 testcase 8.4.1.5	10.3.0	10.4.0
2013-06	RAN#60	R5s130161	1595	-	LTE_TDD: Addition of GCF WI-096 RRC test case 8.1.3.7	10.3.0	10.4.0
2013-06	RAN#60	R5s130163	1596	-	LTE_TDD: Addition of GCF WI-096 TD-LTE<>TDSDMA Testcase 13.4.2.4	10.3.0	10.4.0
2013-06	RAN#60	R5s130165	1597	-	Correction to Support of UTRAN band 19	10.3.0	10.4.0
2013-06	RAN#60	R5s130166	1598	-	Correction to EMM Test Case 9.2.3.3.2	10.3.0	10.4.0
2013-06	RAN#60	R5s130169	1599	-	Addition of Rel 9 EUTRA Multiple MO-SMS over SGs/Idle mode Test case 11.1.5	10.3.0	10.4.0
2013-06	RAN#60	R5s130171	1600	-	Addition of Rel 9 Multiple MO-SMS over SGs / Active mode Test cases 11.1.6.	10.3.0	10.4.0
2013-06	RAN#60	R5s130173	1601	-	Correction to GCF WI-086 EUTRA EMM Test case 9.2.3.3.2	10.3.0	10.4.0
2013-06	RAN#60	R5s130174	1602	-	Correction to GCF WI-086 EUTRA EMM Test case 9.2.3.2.1a	10.3.0	10.4.0
2013-06	RAN#60	R5s130175	1603	-	Correction to EMM Test Case 9.2.3.2.3	10.3.0	10.4.0
2013-06	RAN#60	R5s130179	1604	-	Correction to EUTRA EMM Test Cases	10.3.0	10.4.0
2013-06	RAN#60	R5s130180	1605	-	Correction to EMM Test Case 9.2.3.3.5a	10.3.0	10.4.0
2013-06	RAN#60	R5s130185	1606	-	Correction to check of establishment cause in EUTRA-UTRA Idle Irat test cases	10.3.0	10.4.0
2013-06	RAN#60	R5s130189	1607	-	Correction to EUTRA RRC Test Case 8.3.2.6	10.3.0	10.4.0
2013-06	RAN#60	R5s130190	1608	-	Addition of EUTRA Idle Mode Test Case 6.2.3.23	10.3.0	10.4.0
2013-06	RAN#60	R5s130192	1609	-	Correction for GCF WI-086 EUTRA EMM test cases 9.2.3.2.9	10.3.0	10.4.0
2013-06	RAN#60	R5s130195	1610	-	Baseline upgrade of TTCN-3 ATSs to March-13 in Rel-11	10.3.0	10.4.0
2013-06	RAN#60	R5s130201	1611	-	Addition of Rel-9 EMM test case 9.1.3.3	10.3.0	10.4.0
2013-06	RAN#60	R5s130206	1612	-	Corrections to EUTRA RRC test cases 8.2.4.14, 8.2.4.14a and 8.3.1.16a	10.3.0	10.4.0
2013-06	RAN#60	R5s130207	1613	-	Correction to EUTRA Idle Mode Test Case 6.2.3.15	10.3.0	10.4.0
2013-06	RAN#60	R5s130208	1614	-	Addition of EUTRA Idle Mode Test Case 6.2.3.1a	10.3.0	10.4.0
2013-06	RAN#60	R5s130210	1615	-	LTE_TDD: Correction of RV value for SI3, SI4 and SI5 in EUTRA TDD mode	10.3.0	10.4.0
2013-06	RAN#60	R5s130211	1616	-	LTE_TDD: Addition of GCF WI-096 test case 6.2.1.3	10.3.0	10.4.0
2013-06	RAN#60	R5s130215	1617	-	LTE_TDD: Addition of GCF WI-096 test cases 8.4.1.2	10.3.0	10.4.0
2013-06	RAN#60	R5s130217	1618	-	LTE_TDD: Addition of GCF WI-096 test cases 8.4.1.4	10.3.0	10.4.0
2013-06	RAN#60	R5s130219	1619	-	LTE_TDD: Addition of GCF WI-096 test cases 8.4.2.2	10.3.0	10.4.0
2013-06	RAN#60	R5s130221	1620	-	LTE_TDD: Addition of GCF WI-096 test cases 8.4.2.4	10.3.0	10.4.0
2013-06	RAN#60	R5s130225	1621	-	LTE_TDD: Addition of GCF WI-096 test case 9.2.3.3.1	10.3.0	10.4.0

Date	TSG #	TSG Doc.	CR	Rev	Subject/Comment	Old	New
2013-06	RAN#60	R5s130227	1622	-	LTE_TDD: Addition of GCF WI-096 test case 9.2.3.3.2	10.3.0	10.4.0
2013-06	RAN#60	R5s130229	1623	-	LTE_TDD: Addition of GCF WI-096 test case 9.2.3.3.5	10.3.0	10.4.0
2013-06	RAN#60	R5s130237	1624	-	Correction to EUTRA RRC Test Case 8.5.4.1	10.3.0	10.4.0
2013-06	RAN#60	R5s130238	1625	-	Correction to EUTRA Multi Layer Test Case 13.4.2.5	10.3.0	10.4.0
2013-06	RAN#60	R5s130239	1626	-	Correction to EUTRA-GERAN Idle mode test case 6.2.3.1	10.3.0	10.4.0
2013-06	RAN#60	R5s130240	1627	-	Correction to EUTRA EMM test case 9.2.2.1.8	10.3.0	10.4.0
2013-06	RAN#60	R5s130241	1628	-	Additional corrections to EUTRA-GERAN Idle Mode test case 6.2.3.23 on top of R5s130190	10.3.0	10.4.0
2013-06	RAN#60	R5s130243	1629	-	LTE_TDD: Addition of GCF WI-096 test case 9.2.1.2.1d	10.3.0	10.4.0
2013-06	RAN#60	R5s130245	1630	-	LTE_TDD: Addition of GCF WI-096 test case 13.1.2	10.3.0	10.4.0
2013-06	RAN#60	R5s130250	1631	-	Correction of GCF WI-088 Inter-RAT Measurements test case 8.3.2.8	10.3.0	10.4.0
2013-06	RAN#60	R5s130251	1632	-	Correction of GCF WI-088 EUTRA-1XRTT test case 8.3.2.10	10.3.0	10.4.0
2013-06	RAN#60	R5s130252	1633	-	Renaming Condition Types in Selection Expressions	10.3.0	10.4.0
2013-06	RAN#60	R5s130253	1634	-	LTE_TDD: Addition of GCF WI-097 test case 13.3.2.2	10.3.0	10.4.0
2013-06	RAN#60	R5s130255	1635	-	Correction to EUTRA EMM Test Case 9.2.3.2.9	10.3.0	10.4.0
2013-06	RAN#60	R5s130257	1636	-	Correction to template car_G_LLC_XID_IndAny	10.3.0	10.4.0
2013-06	RAN#60	R5s130258	1637	-	Correction to GCF WI-087 EUTRA-GERAN test case 8.4.3.3	10.3.0	10.4.0
2013-06	RAN#60	R5s130259	1638	-	Correction to GCF WI 086 testcase 9.2.3.2.1b	10.3.0	10.4.0
2013-06	RAN#60	R5s130260	1639	-	Corrections to functions f_GERAN_EnterU10_MT and f_GERAN_EnterU10_MO_WithoutRRConnEst	10.3.0	10.4.0
2013-06	RAN#60	R5s130268	1640	-	Correction to EUTRA RRC Test Case 8.3.2.3	10.3.0	10.4.0
2013-06	RAN#60	R5s130269	1641	-	Correction to EUTRA RRC Test Case 8.5.4.1	10.3.0	10.4.0
2013-06	RAN#60	R5s130270	1642	-	Addition of GCF WI-151 LTE FDD-TDD Inter-mode test case 8.1.3.12a	10.3.0	10.4.0
2013-06	RAN#60	R5s130273	1643	-	Correction to EUTRA EMM Test Case 9.2.2.1.3	10.3.0	10.4.0
2013-06	RAN#60	R5s130275	1644	-	Correction to function f_EUTRA_TrackingAreaUpdateFromAnotherRAT_WithoutRRCConneReq	10.3.0	10.4.0
2013-06	RAN#60	R5s130276	1645	-	Correction to EUTRA Idle Mode Test Case 6.2.3.3a	10.3.0	10.4.0
2013-06	RAN#60	R5s130286	1646	-	LTE_TDD: Correction to f_UTRAN_CellInfo_Init_TDD function	10.3.0	10.4.0
2013-06	RAN#60	R5s130287	1647	-	Correction to EUTRA EMM Test Case 9.2.1.2.1c	10.3.0	10.4.0
2013-06	RAN#60	R5s130292	1648	-	LTE_TDD: Addition of Rel-9 EUTRA Multi-Layer test case 13.4.1.4	10.3.0	10.4.0
2013-06	RAN#60	R5s130300	1649	-	LTE_TDD: Addition of GCF WI-096 TD-LTE<>TDSDMA Testcase 8.3.2.4	10.3.0	10.4.0
2013-06	RAN#60	R5s130302	1650	-	Addition of GCF WI-088 EUTRA<>HRPD Inter-RAT test case 8.3.3.4	10.3.0	10.4.0
2013-06	RAN#60	R5s130305	1651	-	Correction to GCF WI-081 EUTRA MAC test case 7.1.1.2	10.3.0	10.4.0
2013-06	RAN#60	R5s130307	1652	-	Correction to PDU Type Definition PAGINGRESPONSE message	10.3.0	10.4.0
2013-06	RAN#60	R5s130308	1653	-	Correction to EUTRA RRC Test Case 8.4.1.5	10.3.0	10.4.0
2013-06	RAN#60	R5s130310	1654	-	Correction to UTRAN Capability information Procedure in EUTRA Testcases	10.3.0	10.4.0
2013-06	RAN#60	R5s130312	1655	-	Correction to EUTRA Multi-layer Test Case 13.3.1.3	10.3.0	10.4.0
2013-06	RAN#60	R5s130313	1656	-	Correction to GCF WI-082 E-UTRA EMM test case 9.1.2.6	10.3.0	10.4.0
2013-06	RAN#60	R5s130314	1657	-	Correction to GCF WI-151 LTE FDD-TDD Inter-mode test case 8.1.3.12a	10.3.0	10.4.0

Date	TSG #	TSG Doc.	CR	Rev	Subject/Comment	Old	New
2013-06	RAN#60	R5s130316	1658	-	LTE_TDD: Addition of GCF WI-096 TD-LTE<>TDSDMA Testcase 13.3.2.1	10.3.0	10.4.0
2013-06	RAN#60	R5s130318	1659	-	LTE_TDD: Addition of GCF WI-096 TD-LTE<>TDSDMA Testcase 9.2.1.2.1c	10.3.0	10.4.0
2013-06	RAN#60	R5s130320	1660	-	Correction to function f_DeriveSuppEutraBandsFromPics	10.3.0	10.4.0
2013-06	RAN#60	R5s130321	1661	-	Correction to EMM TC 9.2.1.1.24	10.3.0	10.4.0
2013-06	RAN#60	R5s130322	1662	-	LTE_TDD: Addition of Rel9 TD-LTE<>TDSDMA Testcase 6.2.3.33	10.3.0	10.4.0
2013-06	RAN#60	R5s130324	1663	-	Correction to GCF WI-086 E-UTRA EMM testcase 9.2.1.2.8	10.3.0	10.4.0
2013-06	RAN#60	R5s130325	1664	-	Correction to the EMM Test Case 9.2.3.3.5a	10.3.0	10.4.0
2013-06	RAN#60	R5s130326	1665	-	Correction to Eutra Idle Mode TC 6.2.3.1a	10.3.0	10.4.0
2013-06	RAN#60	R5s130327	1666	-	Correction to manual PLMN selection test cases 6.1.1.3, 6.1.1.3a, 6.1.1.3b, 6.2.1.4, 9.2.1.1.13 and 9.2.1.1.13a	10.3.0	10.4.0
2013-06	RAN#60	R5s130329	1667	-	Correction to IXIT px_MaxNumberROHC_ContextSessions in module EUTRA_Parameters in LTE TTCN suite.	10.3.0	10.4.0
2013-06	RAN#60	R5s130330	1668	-	Correction to EUTRA RRC test case 8.1.2.8	10.3.0	10.4.0
2013-06	RAN#60	R5s130331	1669	-	Correction for EUTRA RRC test case 8.1.3.7	10.3.0	10.4.0
2013-06	RAN#60	R5s130337	1670	-	Correction of RRC test case 8.5.4.1	10.3.0	10.4.0
2013-06	RAN#60	R5s130338	1671	-	LTE_TDD: Addition of GCF WI-096 EMM test case 9.2.3.3.4	10.3.0	10.4.0
2013-06	RAN#60	R5s130340	1672	-	Correction to GCF WI-086 testcase 9.2.2.2.2	10.3.0	10.4.0
2013-06	RAN#60	R5s130341	1673	-	Correction in LLC XID negotiation	10.3.0	10.4.0
2013-06	RAN#60	R5s130342	1674	-	LTE_TDD: Correction of GCF WI-096 test cases 8.4.2.2 and 8.4.2.4	10.3.0	10.4.0
2013-06	RAN#60	R5s130344	1675	-	Corrections to GCF WI-088 EUTRA<>HRPD and 1xRTT Test cases 8.3.2.8 and 8.3.2.10	10.3.0	10.4.0
2013-06	RAN#60	R5s130345	1676	-	LTE_TDD: Correction to GCF WI-096 EUTRA test case 13.1.2	10.3.0	10.4.0
2013-06	RAN#60	R5s130347	1677	-	Local guard timer for common preamble functions	10.3.0	10.4.0
2013-06	RAN#60	R5-131068	1557	-	Update of CDMA2000 specification references: Clause 2 of TS 36.523-3	10.4.0	11.0.0
2013-06	RAN#60	R5-131070	1558	-	Update of CDMA2000 specification references: PIXIT for TS 36.523-3	10.4.0	11.0.0
2013-06	RAN#60	R5-131125	1559	-	Clarification of CA test model	10.4.0	11.0.0
2013-06	RAN#60	R5-131129	1560	-	36523-3: Routine maintenance and updates	10.4.0	11.0.0
2013-06	RAN#60	R5-131870	1562	-	Update of CDMA2000 specification references: Annex D of TS 36.523-3	10.4.0	11.0.0
2013-09	RAN#61	R5-133612	1680	-	36523-3: Routine maintenance and updates	11.0.0	11.1.0
2013-09	RAN#61	R5s130352	1681	-	LTE_TDD: Addition of GCF WI-096 test case 13.1.4	11.0.0	11.1.0
2013-09	RAN#61	R5s130356	1682	-	LTE_TDD: Addition of GCF WI-096 test case 13.1.16	11.0.0	11.1.0
2013-09	RAN#61	R5s130376	1698	-	Improved guidance of the test operator during ETWS and CMAS test case execution	11.0.0	11.1.0
2013-09	RAN#61	R5s130378	1699	-	Correction to Generic IMS Registration procedure	11.0.0	11.1.0
2013-09	RAN#61	R5s130379	1700	-	Addition of GCF WI-167 EUTRA-UTRAN Idle Mode test case 6.2.3.33	11.0.0	11.1.0
2013-09	RAN#61	R5s130382	1701	-	Corrections to EPS Attach Procedure to enable IMS Registration via NAS signalling in 36.523 Suite	11.0.0	11.1.0
2013-09	RAN#61	R5s130384	1702	-	Correction to Idle mode test cases 6.2.3.4	11.0.0	11.1.0
2013-09	RAN#61	R5s130385	1703	-	Correction to Idle mode test cases 6.2.3.4a	11.0.0	11.1.0
2013-09	RAN#61	R5s130388	1704	-	Addition of GCF WI-162 LTE-A Carrier Aggregation RRC inter-band test case 8.5.1.7.2	11.0.0	11.1.0
2013-09	RAN#61	R5s130389	1705	-	Re-verification of EMM Test Case 9.2.3.3.4	11.0.0	11.1.0
2013-09	RAN#61	R5s130395	1706	-	Addition of LTE-A (Rel-10) Carrier Aggregation MAC test case 7.1.4.18	11.0.0	11.1.0

Date	TSG #	TSG Doc.	CR	Rev	Subject/Comment	Old	New
2013-09	RAN#61	R5s130397	1707	-	Addition of LTE-A (Rel-10) Carrier Aggregation RRC test case 8.3.1.18.2	11.0.0	11.1.0
2013-09	RAN#61	R5s130400	1708	-	Addition of LTE-A (Rel-10) Carrier Aggregation RRC test case 8.3.1.17.2	11.0.0	11.1.0
2013-09	RAN#61	R5s130402	1709	-	Addition of LTE-A (Rel-10) Carrier Aggregation RRC test case 8.3.1.22.2	11.0.0	11.1.0
2013-09	RAN#61	R5s130404	1710	-	Addition of LTE-A (Rel-10) Carrier Aggregation RRC test case 8.2.2.3.2	11.0.0	11.1.0
2013-09	RAN#61	R5s130406	1711	-	Addition of LTE-A Carrier Aggregation RRC inter-band test case 8.2.2.4.2	11.0.0	11.1.0
2013-09	RAN#61	R5s130408	1712	-	Addition of LTE-A Carrier Aggregation RRC inter-band test case 8.2.2.5.2	11.0.0	11.1.0
2013-09	RAN#61	R5s130413	1713	-	Re-verification of EMM Test Case 9.2.3.4.1	11.0.0	11.1.0
2013-09	RAN#61	R5s130417	1714	-	Correction to template cr_SingleAccessCapAny in LTE ATS	11.0.0	11.1.0
2013-09	RAN#61	R5s130418	1683	-	LTE_TDD : Correction to EUTRA RRC TC 8.3.1.16	11.0.0	11.1.0
2013-09	RAN#61	R5s130419	1715	-	LTE/SAE ATS cleanup (… moving “modulepar” PICS to ‘parameters.ttcn’)	11.0.0	11.1.0
2013-09	RAN#61	R5s130420	1716	-	Correction to Eutra RRC TC 8.5.1.2	11.0.0	11.1.0
2013-09	RAN#61	R5s130422	1717	-	Addition of GCF WI-162 LTE-A Carrier Aggregation RRC handover test case 8.2.4.18.2	11.0.0	11.1.0
2013-09	RAN#61	R5s130426	1718	-	Correction to EUTRA multi layer Test Case 13.3.1.3	11.0.0	11.1.0
2013-09	RAN#61	R5s130428	1719	-	Correction to EUTRA EMM TC 9.2.2.1.3	11.0.0	11.1.0
2013-09	RAN#61	R5s130429	1720	-	Correction to EMM test case 9.2.2.2.2	11.0.0	11.1.0
2013-09	RAN#61	R5s130431	1721	-	Correction to function f_EUTRA_ActivateAdditionalPDNOnDef()	11.0.0	11.1.0
2013-09	RAN#61	R5s130432	1722	-	Correction to RLC Explicit size for FACH configuration in UTRA TDD	11.0.0	11.1.0
2013-09	RAN#61	R5s130433	1723	-	Correction to function f_UTRAN_Init	11.0.0	11.1.0
2013-09	RAN#61	R5s130434	1724	-	Correction to testcase 9.2.3.2.3 & 9.2.3.2.1b	11.0.0	11.1.0
2013-09	RAN#61	R5s130436	1725	-	Correction to EUTRA Multi-Layer Test Case 13.1.9	11.0.0	11.1.0
2013-09	RAN#61	R5s130438	1726	-	Correction to GCF WI-082 EUTRA EMM Testcase 9.1.4.2	11.0.0	11.1.0
2013-09	RAN#61	R5s130440	1727	-	Correction to GCF WI-151 EUTRA FDD-TDD Testcase 8.3.1.13a	11.0.0	11.1.0
2013-09	RAN#61	R5s130441	1728	-	Correction to GCF WI-151 EUTRA FDD-TDD Testcase 8.3.1.16a	11.0.0	11.1.0
2013-09	RAN#61	R5s130442	1729	-	Correction to EUTRA RRC Test Case 8.2.4.14	11.0.0	11.1.0
2013-09	RAN#61	R5s130443	1730	-	Correction to GCF WI-151 EUTRA FDD-TDD Testcase 8.3.1.15a	11.0.0	11.1.0
2013-09	RAN#61	R5s130444	1731	-	Correction to EMM Test Case 9.2.3.1.6	11.0.0	11.1.0
2013-09	RAN#61	R5s130447	1684	-	LTE_TDD: Addition to GCF WI-096 EUTRA EMM test case 9.2.3.2.1c	11.0.0	11.1.0
2013-09	RAN#61	R5s130451	1732	-	Correction to GCF WI-086 EUTRA EMM Testcase 9.2.3.2.3	11.0.0	11.1.0
2013-09	RAN#61	R5s130452	1733	-	Correction to the naming convention of ASN.1 type controlChannelDRXInfoTDD128 for TD LTE<>TDSDMA testcases	11.0.0	11.1.0
2013-09	RAN#61	R5s130453	1734	-	Correction to Generic IMS Registration procedure	11.0.0	11.1.0
2013-09	RAN#61	R5s130455	1735	-	Correction to functions in f_EUTRA_Preamble_EmptyCSG_AllowedList()	11.0.0	11.1.0
2013-09	RAN#61	R5s130456	1736	-	Correction to EMM Test Cases 9.2.3.2.1b and 9.2.1.2.1b	11.0.0	11.1.0
2013-09	RAN#61	R5s130471	1737	-	GCF Priority 1 - Corrections to EUTRA RRC Test Case 8.2.4.13a	11.0.0	11.1.0
2013-09	RAN#61	R5s130479	1738	-	Correction to EMM TC 9.2.3.2.1b	11.0.0	11.1.0
2013-09	RAN#61	R5s130481	1739	-	Correction to EUTRA Idle Mode TC 6.4.1	11.0.0	11.1.0
2013-09	RAN#61	R5s130482	1740	-	Correction to EMM test cases 9.2.3.3.5 and 9.2.3.2.3	11.0.0	11.1.0
2013-09	RAN#61	R5s130483	1685	-	LTE_TDD: Addition of GCF WI-162 LTE-A Carrier Aggregation RRC intra-band test case 8.5.1.7.1	11.0.0	11.1.0

Date	TSG #	TSG Doc.	CR	Rev	Subject/Comment	Old	New
2013-09	RAN#61	R5s130485	1686	-	LTE_TDD: Addition of GCF WI-162 LTE-A Carrier Aggregation RRC intra-band test case 8.2.2.4.1	11.0.0	11.1.0
2013-09	RAN#61	R5s130487	1687	-	LTE_TDD: Addition of GCF WI-162 LTE-A Carrier Aggregation RRC intra-band test case 8.2.2.5.1	11.0.0	11.1.0
2013-09	RAN#61	R5s130489	1741	-	Addition of GCF WI-162 LTE-A Carrier Aggregation RRC intra-band test case 8.5.1.7.1	11.0.0	11.1.0
2013-09	RAN#61	R5s130493	1742	-	Addition of GCF WI-162 LTE-A Carrier Aggregation RRC intra-band test case 8.2.2.5.1	11.0.0	11.1.0
2013-09	RAN#61	R5s130495	1743	-	Addition of GCF WI-154/ee1 EUTRA IMS Emergency Call test case 8.1.2.11	11.0.0	11.1.0
2013-09	RAN#61	R5s130498	1744	-	Corrections to PLMN values for UTRAN band VI	11.0.0	11.1.0
2013-09	RAN#61	R5s130501	1745	-	Correction to AddressInfo in PktDataProtoAddr	11.0.0	11.1.0
2013-09	RAN#61	R5s130502	1746	-	Correction to Test Case Selection Expressions for TC 6.2.2.5	11.0.0	11.1.0
2013-09	RAN#61	R5s130503	1747	-	Correction to f_EUTRA_508RRC_AddModRel_Scell_Common function	11.0.0	11.1.0
2013-09	RAN#61	R5s130505	1748	-	TTCN Correction in Test case 8.5.4.1 for optional IE checking in UE Capability Information	11.0.0	11.1.0
2013-09	RAN#61	R5s130506	1749	-	Correction to GCF WI-086 EUTRA Multilayer Testcase 13.4.2.1	11.0.0	11.1.0
2013-09	RAN#61	R5s130507	1750	-	Correction to Selection Expressions for SMS over SGs test cases.	11.0.0	11.1.0
2013-09	RAN#61	R5s130512	1751	-	Correction to IP Handing for EUTRA<>UTRA Testcases	11.0.0	11.1.0
2013-09	RAN#61	R5s130513	1752	-	Correction to the System Information for EUTRA Testcases	11.0.0	11.1.0
2013-09	RAN#61	R5s130520	1753	-	Correction to EUTRA Idle Mode TC 6.2.2.5	11.0.0	11.1.0
2013-09	RAN#61	R5s130521	1688	-	LTE_TDD: Addition of GCF WI-096 test case 6.2.2.5	11.0.0	11.1.0
2013-09	RAN#61	R5s130523	1689	-	LTE_TDD: Addition to GCF WI-096 EUTRA Multilayer test case 13.4.2.1	11.0.0	11.1.0
2013-09	RAN#61	R5s130527	1754	-	Addition of LTE-A ZUC test case 7.3.3.5 for FDD	11.0.0	11.1.0
2013-09	RAN#61	R5s130529	1755	-	Addition of LTE-A ZUC test case 7.3.3.6 for FDD	11.0.0	11.1.0
2013-09	RAN#61	R5s130531	1756	-	Addition of LTE-A ZUC test case 7.3.4.3 for FDD	11.0.0	11.1.0
2013-09	RAN#61	R5s130533	1757	-	Addition of LTE-A ZUC test case 9.4.5 for FDD	11.0.0	11.1.0
2013-09	RAN#61	R5s130535	1758	-	Addition of LTE-A ZUC test case 9.4.6 for FDD	11.0.0	11.1.0
2013-09	RAN#61	R5s130537	1759	-	Correction to f_UT_CheckETWS_CMAS_NoAlert	11.0.0	11.1.0
2013-09	RAN#61	R5s130538	1690	-	LTE_TDD: Addition of GCF WI-169 test case 8.1.3.6a	11.0.0	11.1.0
2013-09	RAN#61	R5s130540	1760	-	Correction to GCF WI-081 EUTRA MAC Testcase 7.1.5.1	11.0.0	11.1.0
2013-09	RAN#61	R5s130545	1761	-	Correction to LTE-GERAN test case 13.4.2.5	11.0.0	11.1.0
2013-09	RAN#61	R5s130546	1762	-	Correction to LTE-GERAN Idle Mode testcase 6.2.3.1	11.0.0	11.1.0
2013-09	RAN#61	R5s130547	1763	-	Correction to GCF WI-096 EUTRA EMM Testcase 9.2.3.2.1b	11.0.0	11.1.0
2013-09	RAN#61	R5s130548	1691	-	LTE_TDD : Addition of LTE-A ZUC test case 7.3.3.5	11.0.0	11.1.0
2013-09	RAN#61	R5s130550	1692	-	LTE_TDD : Addition of LTE-A ZUC test case 7.3.3.6	11.0.0	11.1.0
2013-09	RAN#61	R5s130552	1693	-	LTE_TDD : Addition of LTE-A ZUC test case 7.3.4.3	11.0.0	11.1.0
2013-09	RAN#61	R5s130554	1694	-	LTE_TDD : Addition of LTE-A ZUC test case 9.4.6	11.0.0	11.1.0
2013-09	RAN#61	R5s130556	1695	-	LTE_TDD : Addition of LTE-A ZUC test case 9.4.5	11.0.0	11.1.0
2013-09	RAN#61	R5s130558	1764	-	Correction to Ciphering configuration for UTRA TDD	11.0.0	11.1.0
2013-09	RAN#61	R5s130559	1765	-	Correction to DL RB0 configuration and BCCH configuration for UTRA TDD	11.0.0	11.1.0
2013-09	RAN#61	R5s130577	1696	-	LTE_TDD: Addition of GCF WI-169 test case 6.2.3.4a	11.0.0	11.1.0
2013-09	RAN#61	R5s130587	1766	-	Addition of HeNB test case 6.3.9	11.0.0	11.1.0

Date	TSG #	TSG Doc.	CR	Rev	Subject/Comment	Old	New
2013-09	RAN#61	R5s130589	1767	-	Correction to EMM Testcase 9.2.1.2.11	11.0.0	11.1.0
2013-09	RAN#61	RP-131108	1697	-	CR to 36.523-3: Add new verified and e-mail agreed TTCN test cases in the TC lists in 36.523-3 (prose), Annex A	11.0.0	11.1.0
2013-12	RAN#62	R5-135000	1768	-	36523-3: Routine maintenance and updates	11.1.0	11.2.0
2013-12	RAN#62	R5s130491	1769	-	Addition of GCF WI-162 LTE-A Carrier Aggregation RRC intra-band test case 8.2.2.4.1	11.1.0	11.2.0
2013-12	RAN#62	R5s130525	1770	-	Addition of LTE-A Minimization of Drive Tests (MDT)test case 8.6.2.1	11.1.0	11.2.0
2013-12	RAN#62	R5s130561	1771	-	Addition of GCF WI-086 Multi-Layer SRVCC test case 13.4.3.1	11.1.0	11.2.0
2013-12	RAN#62	R5s130563	1772	-	Addition of MDT test case 8.6.4.1	11.1.0	11.2.0
2013-12	RAN#62	R5s130566	1773	-	Addition of LTE-A Minimization of Drive Tests (MDT) test case 8.6.2.6	11.1.0	11.2.0
2013-12	RAN#62	R5s130568	1774	-	Addition of LTE-A Minimization of Drive Tests (MDT) test case 8.6.2.7	11.1.0	11.2.0
2013-12	RAN#62	R5s130577	1775	-	LTE_TDD: Addition of GCF WI-169 test case 6.2.3.4a	11.1.0	11.2.0
2013-12	RAN#62	R5s130582	1776	-	Addition of LTE MDT test case 8.6.2.4	11.1.0	11.2.0
2013-12	RAN#62	R5s130584	1777	-	Addition of LTE MDT test case 8.6.2.2	11.1.0	11.2.0
2013-12	RAN#62	R5s130589	1778	-	Correction to EMM Testcase 9.2.1.2.11	11.1.0	11.2.0
2013-12	RAN#62	R5s130591	1779	-	Addition of LTE-A Minimization of Drive Tests (MDT) test case 8.6.2.5	11.1.0	11.2.0
2013-12	RAN#62	R5s130593	1780	-	Addition of LTE MDT test case 8.6.4.2	11.1.0	11.2.0
2013-12	RAN#62	R5s130600	1781	-	Addition of GCF WI-159 EUTRA-1xRTT eCSFB test case 8.4.7.6	11.1.0	11.2.0
2013-12	RAN#62	R5s130602	1782	-	Addition of GCF WI-159 EUTRA-1xRTT eCSFB test case 8.4.7.7	11.1.0	11.2.0
2013-12	RAN#62	R5s130604	1783	-	LTE_TDD : Correction to RRC Testcase 8.4.1.4	11.1.0	11.2.0
2013-12	RAN#62	R5s130605	1784	-	LTE_TDD : Correction in f_SS_DL_DPCH_ModifySRB_to_HS_DSCH function	11.1.0	11.2.0
2013-12	RAN#62	R5s130606	1785	-	LTE_TDD: Addition to GCF WI-096 EUTRA Multilayer test case 13.1.3	11.1.0	11.2.0
2013-12	RAN#62	R5s130608	1786	-	Correction to LTE-A Carrier Aggregation test cases 8.2.2.3.x	11.1.0	11.2.0
2013-12	RAN#62	R5s130610	1787	-	Correction to EMM Test Case 9.3.1.4 and 9.3.1.5	11.1.0	11.2.0
2013-12	RAN#62	R5s130615	1788	-	Addition of LTE-A Minimization of Drive Tests (MDT) test case 8.6.4.6	11.1.0	11.2.0
2013-12	RAN#62	R5s130617	1789	-	Correction to EUTRA Idle Mode Test Case 6.2.3.1a	11.1.0	11.2.0
2013-12	RAN#62	R5s130622	1790	-	TTCN Correction in EMM test case 9.2.3.1.17	11.1.0	11.2.0
2013-12	RAN#62	R5s130623	1791	-	LTE_TDD: Addition of GCF WI-156 EUTRA RRC measurement test case 8.3.1.16	11.1.0	11.2.0
2013-12	RAN#62	R5s130629	1792	-	Correction in Test case applicability for CA test cases	11.1.0	11.2.0
2013-12	RAN#62	R5s130631	1793	-	Addition of GCF WI-162 LTE-A Carrier Aggregation MAC test case 7.1.4.21	11.1.0	11.2.0
2013-12	RAN#62	R5s130633	1794	-	Correction of test case 7.1.5.1	11.1.0	11.2.0
2013-12	RAN#62	R5s130634	1795	-	Correction of test case 9.2.3.2.10 and 9.3.1.7a	11.1.0	11.2.0
2013-12	RAN#62	R5s130636	1796	-	Addition of Multilayer test case 13.1.2a	11.1.0	11.2.0
2013-12	RAN#62	R5s130639	1797	-	Addition of LTE-A Minimization of Drive Tests (MDT) test case 8.6.4.3	11.1.0	11.2.0
2013-12	RAN#62	R5s130641	1798	-	Correction to idle mode test case 6.2.3.1	11.1.0	11.2.0
2013-12	RAN#62	R5s130642	1799	-	Correction to RLC test case 7.2.2.3	11.1.0	11.2.0
2013-12	RAN#62	R5s130643	1800	-	Addition of (Rel-9) EUTRA RRC Measurement test case 8.3.1.23	11.1.0	11.2.0
2013-12	RAN#62	R5s130645	1801	-	Addition of (Rel-9) EUTRA RRC Measurement test case 8.3.1.25	11.1.0	11.2.0
2013-12	RAN#62	R5s130647	1802	-	Correction to Ciphering configuration for EUTRA<>UTRA Testcases	11.1.0	11.2.0

Date	TSG #	TSG Doc.	CR	Rev	Subject/Comment	Old	New
2013-12	RAN#62	R5s130648	1803	-	Correction to GCF WI-082 EUTRA ESM Testcase 10.6.1	11.1.0	11.2.0
2013-12	RAN#62	R5s130649	1804	-	Correction to GCF WI-151 EUTRA FDD<>TDD Testcase 8.2.4.13a	11.1.0	11.2.0
2013-12	RAN#62	R5s130650	1805	-	Correction to GCF WI-151 EUTRA FDD<>TDD Testcase 8.3.1.15a	11.1.0	11.2.0
2013-12	RAN#62	R5s130651	1806	-	Correction to GCF WI-154 IMS Emergency Call over EPS / EUTRA Testcase 8.1.2.11	11.1.0	11.2.0
2013-12	RAN#62	R5s130652	1807	-	LTE_TDD: Addition of (Rel-9) EUTRA RRC Measurement test case 8.3.1.23	11.1.0	11.2.0
2013-12	RAN#62	R5s130654	1808	-	LTE_TDD: Addition of (Rel-9) EUTRA RRC Measurement test case 8.3.1.24	11.1.0	11.2.0
2013-12	RAN#62	R5s130656	1809	-	LTE_TDD: Addition of EMM test case 9.2.3.3.5a	11.1.0	11.2.0
2013-12	RAN#62	R5s130658	1810	-	LTE_TDD : Addition of Multi-layer test case 13.1.2a	11.1.0	11.2.0
2013-12	RAN#62	R5s130660	1811	-	Correction required to IMS Registration procedure	11.1.0	11.2.0
2013-12	RAN#62	R5s130661	1812	-	LTE_TDD: Correction to GCF WI-096 TD_LTE<>TDSDMA Testcase 8.4.1.4	11.1.0	11.2.0
2013-12	RAN#62	R5s130662	1813	-	LTE_TDD: Correction to GCF WI-096 TD_LTE<>TDSDMA Testcase 13.1.4	11.1.0	11.2.0
2013-12	RAN#62	R5s130663	1814	-	LTE_TDD: Addition of (Rel-9) EUTRA RRC Measurement test case 8.3.1.25	11.1.0	11.2.0
2013-12	RAN#62	R5s130665	1815	-	LTE_TDD: Addition of (Rel-9) EUTRA RRC Measurement test case 8.3.1.26	11.1.0	11.2.0
2013-12	RAN#62	R5s130667	1816	-	LTE_TDD: Addition of (Rel-9) EUTRA RRC Measurement test case 8.3.1.27	11.1.0	11.2.0
2013-12	RAN#62	R5s130669	1817	-	Addition of (Rel-9) EUTRA RRC Measurement test case 8.3.1.24	11.1.0	11.2.0
2013-12	RAN#62	R5s130671	1818	-	Addition of (Rel-9) EUTRA RRC Measurement test case 8.3.1.26	11.1.0	11.2.0
2013-12	RAN#62	R5s130676	1819	-	LTE_TDD : Addition of EMM test case 9.2.2.1.3	11.1.0	11.2.0
2013-12	RAN#62	R5s130678	1820	-	Correction in function f_UTRAN_CS_Fallback_WithHandover()	11.1.0	11.2.0
2013-12	RAN#62	R5s130680	1821	-	Correction in function f_EUTRA_SendAuthParameters() and related functions	11.1.0	11.2.0
2013-12	RAN#62	R5s130682	1822	-	Correction for applicability for SMS test cases 11.1.5 and 11.1.6	11.1.0	11.2.0
2013-12	RAN#62	R5s130683	1823	-	Correction for EUTRA Idle Mode test case 6.1.2.17	11.1.0	11.2.0
2013-12	RAN#62	R5s130688	1824	-	LTE_TDD: Addition of LTE-A Carrier Aggregation MAC test case 7.1.4.18	11.1.0	11.2.0
2013-12	RAN#62	R5s130690	1825	-	Correction to LTE-A Carrier Aggregation RRC test cases 8.3.1.18.x	11.1.0	11.2.0
2013-12	RAN#62	R5s130693	1826	-	Correction for EMM Test Case 9.2.3.4.1	11.1.0	11.2.0
2013-12	RAN#62	R5s130695	1827	-	Correction to RRC TC 8.3.1.13	11.1.0	11.2.0
2013-12	RAN#62	R5s130696	1828	-	LTE_TDD: Addition of GCF WI-162 LTE-A Carrier Aggregation MAC test case 7.1.4.21	11.1.0	11.2.0
2013-12	RAN#62	R5s130699	1829	-	Correction of GCF WI-086 E-UTRA EMM Test case 9.2.3.3.4	11.1.0	11.2.0
2013-12	RAN#62	R5s130700	1830	-	Correction to MDT test case 8.6.2.4	11.1.0	11.2.0
2013-12	RAN#62	R5s130703	1831	-	Correction for RRC test case 8.5.1.3	11.1.0	11.2.0
2013-12	RAN#62	R5s130704	1832	-	LTE_TDD : Correction in cs_TrChInfoTrCHListDL_336_148_TDD template	11.1.0	11.2.0
2013-12	RAN#62	R5s130705	1833	-	Correction to function cs_TrLogMappingPCH_FACH_PS_TDD	11.1.0	11.2.0
2013-12	RAN#62	R5s130707	1834	-	Correction to test case 9.2.1.2.1b and 9.2.1.2.1c	11.1.0	11.2.0
2013-12	RAN#62	R5s130708	1835	-	Correction to MDT test case 8.6.2.6 .	11.1.0	11.2.0
2013-12	RAN#62	R5s130709	1836	-	Correction to test case 9.2.3.2.3	11.1.0	11.2.0
2013-12	RAN#62	R5s130711	1837	-	LTE_TDD: Addition of EUTRA Multi-layer test case 13.1.5	11.1.0	11.2.0
2013-12	RAN#62	R5s130713	1838	-	Correction to test case LTE-UTRA test case 6.2.3.33	11.1.0	11.2.0
2013-12	RAN#62	R5s130717	1839	-	Correction to GCF WI-151 EUTRA FDD-TDD test case 8.3.1.13a	11.1.0	11.2.0

Date	TSG #	TSG Doc.	CR	Rev	Subject/Comment	Old	New
2013-12	RAN#62	R5s130718	1840	-	Correction to GCF WI-151 EUTRA FDD-TDD test case 8.3.1.16a	11.1.0	11.2.0
2013-12	RAN#62	R5s130720	1841	-	Correction of (Rel-9) EUTRA RRC Measurement test case 8.3.1.25	11.1.0	11.2.0
2013-12	RAN#62	R5s130721	1842	-	Correction to EUTRA EMM test case 9.2.3.2.1b	11.1.0	11.2.0
2013-12	RAN#62	R5s130722	1843	-	Correction to EUTRA EMM test case 9.2.3.2.3	11.1.0	11.2.0
2013-12	RAN#62	R5s130723	1844	-	LTE_TDD: Addition of GCF WI-169 test case 8.3.2.11	11.1.0	11.2.0
2013-12	RAN#62	R5s130725	1845	-	LTE_TDD: Addition of GCF WI-169 test case 8.3.2.3a	11.1.0	11.2.0
2013-12	RAN#62	R5s130727	1846	-	Correction of (Rel-9) EUTRA RRC Measurement test case 8.3.1.26	11.1.0	11.2.0
2013-12	RAN#62	R5s130730	1847	-	Correction to PLMN MCC conversion functions	11.1.0	11.2.0
2013-12	RAN#62	R5s130731	1848	-	Addition of LTE-A Carrier Aggregation RRC test case 8.2.4.21.2	11.1.0	11.2.0
2013-12	RAN#62	R5s130733	1849	-	Addition of (Rel-9) EUTRA RRC Measurement test case 8.3.1.27	11.1.0	11.2.0
2013-12	RAN#62	R5s130735	1850	-	Corrections to EUTRA Idle Mode Test case 6.2.1.1	11.1.0	11.2.0
2013-12	RAN#62	R5s130736	1851	-	Correction to EUTRA RRC Test case 8.1.1.6	11.1.0	11.2.0
2013-12	RAN#62	R5s130741	1852	-	Correction of Rel-9 EUTRA RRC Measurement test case 8.3.1.26	11.1.0	11.2.0
2013-12	RAN#62	R5s130744	1853	-	LTE_TDD : Addition of RRC test case 8.3.2.5	11.1.0	11.2.0
2013-12	RAN#62	R5s130745	1854	-	Correction to MDT test case 8.6.2.6	11.1.0	11.2.0
2013-12	RAN#62	R5s130748	1855	-	Addition of GCF WI-154/ee1 IMS Emergency Call over EPS test case 11.2.1	11.1.0	11.2.0
2013-12	RAN#62	R5s130752	1856	-	LTE_TDD : Addition of LTE-A CA RRC test case 8.2.2.3.1	11.1.0	11.2.0
2013-12	RAN#62	R5s130762	1857	-	Correction to GCF WI-086 EUTRA EMM Test case 9.2.3.3.5	11.1.0	11.2.0
2013-12	RAN#62	R5s130763	1858	-	Correction to GCF WI-088 EUTRA<>HRPD Inter-RAT test case 8.3.3.4	11.1.0	11.2.0
2013-12	RAN#62	R5s130772	1859	-	Correction to test case 9.2.3.2.1a	11.1.0	11.2.0
2013-12	RAN#62	R5s130773	1860	-	correction to f_UTRAN_CS_Fallback_WithRedirection_WithoutRRCConnEst	11.1.0	11.2.0
2013-12	RAN#62	R5s130774	1861	-	Correction to test case 9.2.1.2.8 and 9.2.3.2.8	11.1.0	11.2.0
2013-12	RAN#62	R5s130775	1862	-	Correction to test case 13.4.2.4	11.1.0	11.2.0
2013-12	RAN#62	R5s130777	1863	-	Correction to LTE-GERAN test cases on SNDCP and IP config	11.1.0	11.2.0
2013-12	RAN#62	R5s130778	1864	-	Correction to GCF WI-086 EUTRA Testcases 6.2.3.31 and 9.2.3.3.1	11.1.0	11.2.0
2013-12	RAN#62	R5s130782	1865	-	Addition of LTE-A Carrier Aggregation RRC Handover test cases 8.2.4.17.2	11.1.0	11.2.0
2013-12	RAN#62	R5s130784	1866	-	Addition of LTE-A Carrier Aggregation RRC Handover test cases 8.2.4.20.2	11.1.0	11.2.0
2013-12	RAN#62	R5s130786	1867	-	LTE_TDD: Addition of GCF WI-091 EUTRA Idle Mode CSG test case 6.3.1	11.1.0	11.2.0
2013-12	RAN#62	R5s130788	1868	-	Addition of LTE-A Carrier Aggregation RRC Handover test cases 8.2.4.19.2	11.1.0	11.2.0
2013-12	RAN#62	R5s130797	1869	-	Correction to common function ôf_UTRAN_CS_Fallback_WithHandoverö	11.1.0	11.2.0
2013-12	RAN#62	R5s130807	1870	-	Correction to SRVCC test case 13.4.3.1	11.1.0	11.2.0
2013-12	RAN#62	R5s130812	1871	-	Re-verification of HeNB test case 6.3.9	11.1.0	11.2.0
2013-12	RAN#62	R5s130814	1872	-	Correction to EMM test cases 9.2.1.2.1d and 9.2.3.2.1c	11.1.0	11.2.0
2013-12	RAN#62	R5s130817	1873	-	Correction to ESM test case 10.8.7	11.1.0	11.2.0
2013-12	RAN#62	R5s130819	1874	-	LTE_TDD: Addition of EUTRA Idle Mode CSG test case 6.4.1	11.1.0	11.2.0
2013-12	RAN#62	R5s130825	1875	-	Addition of Rel-9 EUTRA RRC test case 8.3.2.11	11.1.0	11.2.0
2013-12	RAN#62	R5s130828	1876	-	Correction to RRC test case 8.5.4.1	11.1.0	11.2.0

Date	TSG #	TSG Doc.	CR	Rev	Subject/Comment	Old	New
2013-12	RAN#62	R5s130829	1877	-	Addition of Rel-9 EUTRA Idle Mode MFBI test case 6.1.2.19	11.1.0	11.2.0
2013-12	RAN#62	R5s130831	1878	-	Addition of Rel-9 EUTRA Idle Mode MFBI test case 6.1.2.20	11.1.0	11.2.0
2013-12	RAN#62	R5s130833	1879	-	LTE_TDD : Addition of Multi-layer test case 13.1.15	11.1.0	11.2.0
2013-12	RAN#62	R5s130837	1880	-	Addition of GCF WI-156 EUTRA Idle Mode MFBI test case 6.1.2.21	11.1.0	11.2.0
2013-12	RAN#62	R5s130839	1881	-	LTE_TDD : Addition of HeNB test case 6.3.9	11.1.0	11.2.0
2013-12	RAN#62	R5s130841	1882	-	Addition of Rel-9 EUTRA RRC MFBI test case 8.2.4.22	11.1.0	11.2.0
2013-12	RAN#62	R5s130845	1883	-	Correction to LTE-A CA test case 8.2.4.17.2	11.1.0	11.2.0
2013-12	RAN#62	R5s130851	1884	-	Correction to common function f_UTRAN_InterRAT_InitialiseAuthParams_Common()	11.1.0	11.2.0
2013-12	RAN#62	R5s130852	1885	-	LTE_TDD: Addition of GCF WI-162 LTE-A Carrier Aggregation test case 8.3.1.17.1	11.1.0	11.2.0
2013-12	RAN#62	R5s130856	1886	-	Correction to MultiLayer test case 13.1.2a	11.1.0	11.2.0
2013-12	RAN#62	R5s130857	1887	-	Correction to EMM test case 9.2.3.2.3	11.1.0	11.2.0
2013-12	RAN#62	R5s130858	1888	-	Addition of EUTRA<>UTRA Hybrid CSG Cell test case 6.4.5	11.1.0	11.2.0
2013-12	RAN#62	R5s130860	1889	-	Corrections to EUTRA FDD-TDD test case 8.3.1.16a	11.1.0	11.2.0
2013-12	RAN#62	R5s130863	1890	-	Correction to EUTRA RRC Test case 8.5.4.1	11.1.0	11.2.0
2013-12	RAN#62	R5s130864	1891	-	LTE_TDD : Addition of LTE-A CA RRC test case 8.3.1.22.1	11.1.0	11.2.0
2013-12	RAN#62	R5s130866	1892	-	Addition of LTE-A CA RRC test case 8.3.1.22.1	11.1.0	11.2.0
2013-12	RAN#62	RP-131869	1893	-	CR to 36.523-3: Add new verified and e-mail agreed TTCN test cases in the TC lists in 36.523-3 (prose), Annex A	11.1.0	11.2.0

History

Document history		
V11.0.0	August 2013	Publication
V11.1.0	October 2013	Publication
V11.2.0	February 2014	Publication